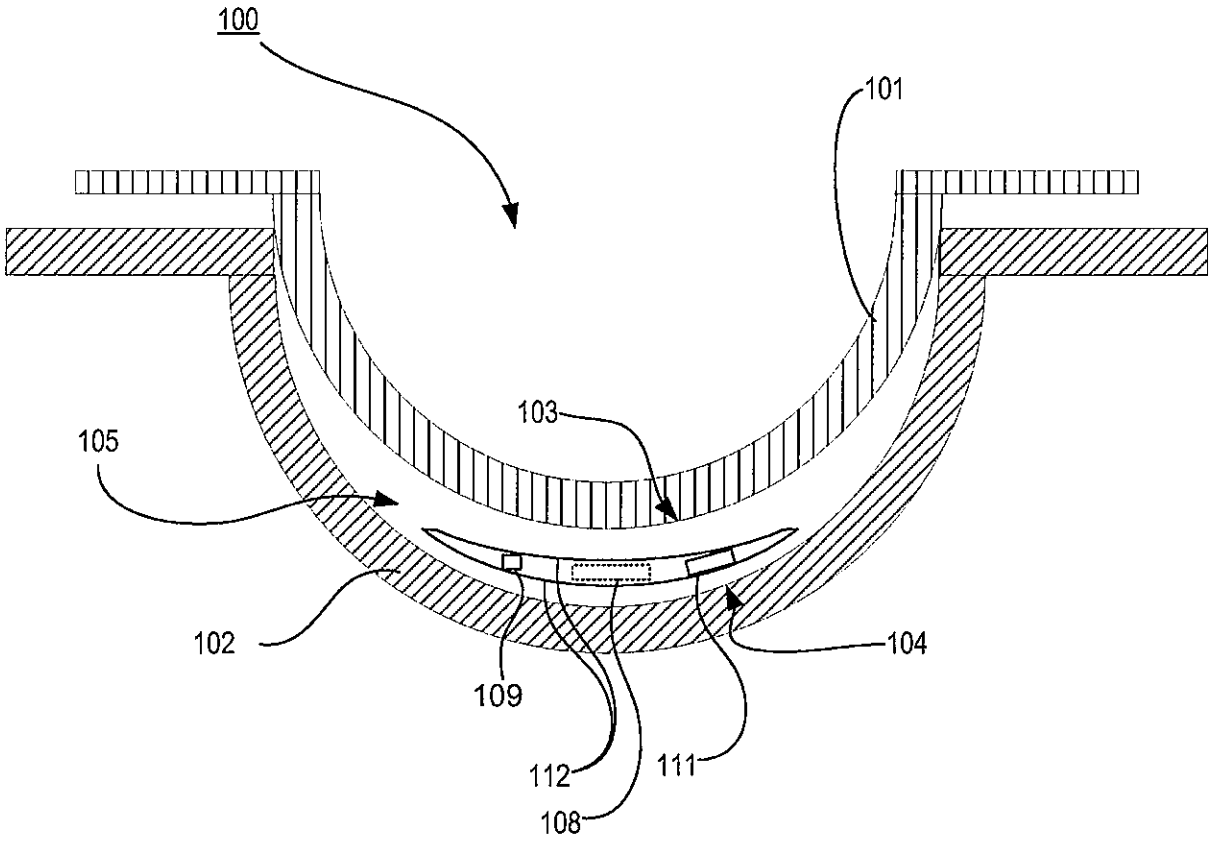

FIG. 1

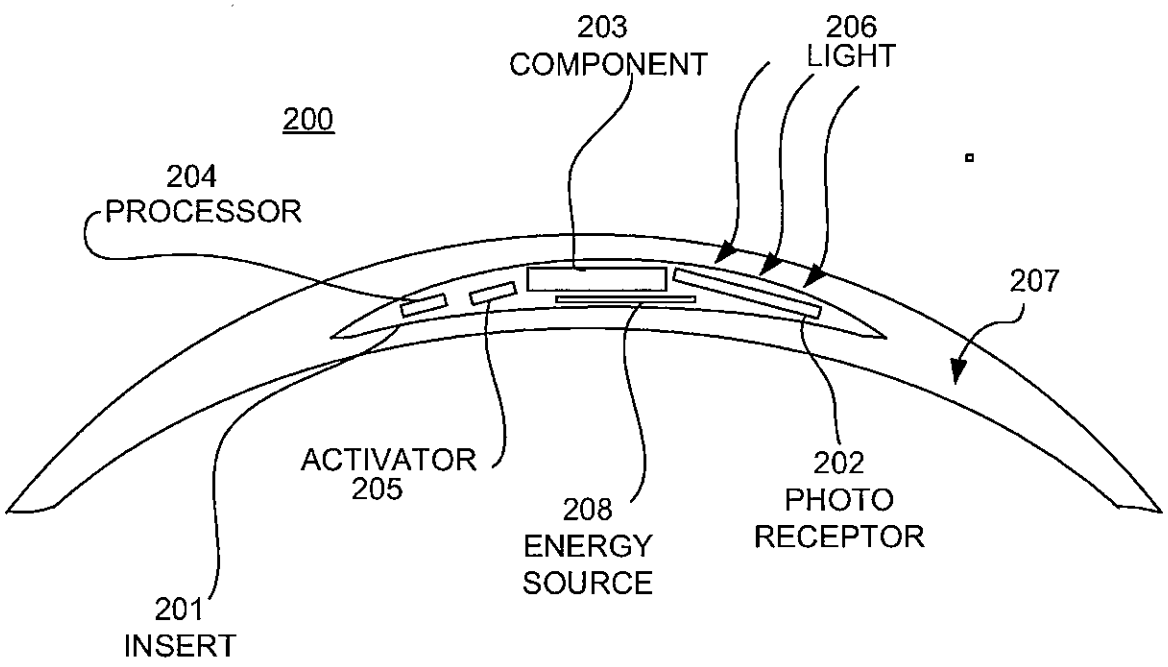
203
COMPONENT
206
LIGHT
200
204
PROCESSOR
207
ACTIVATOR
205
208
ENERGY
SOURCE
202
PHOTO
RECEPTOR
201
INSERT

FIG. 2

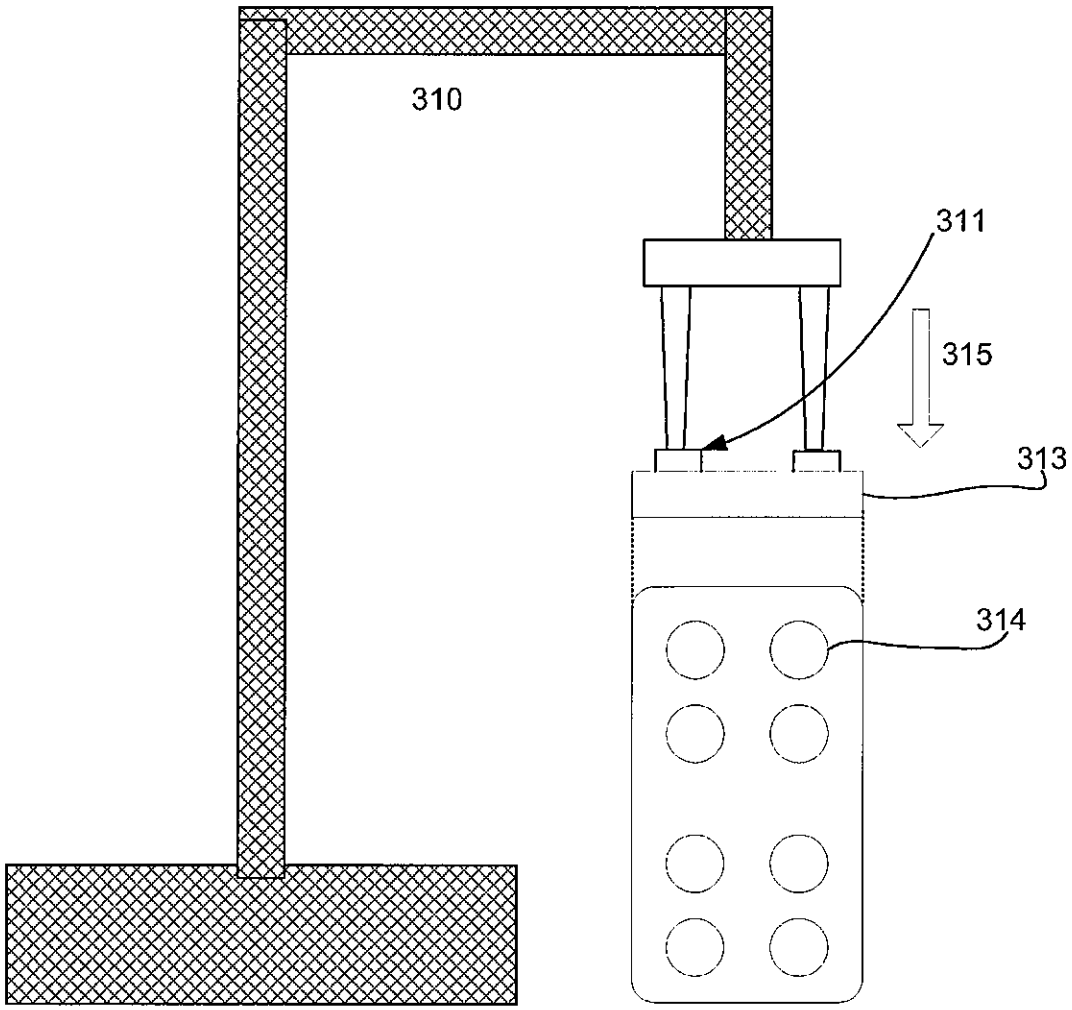

FIG. 3

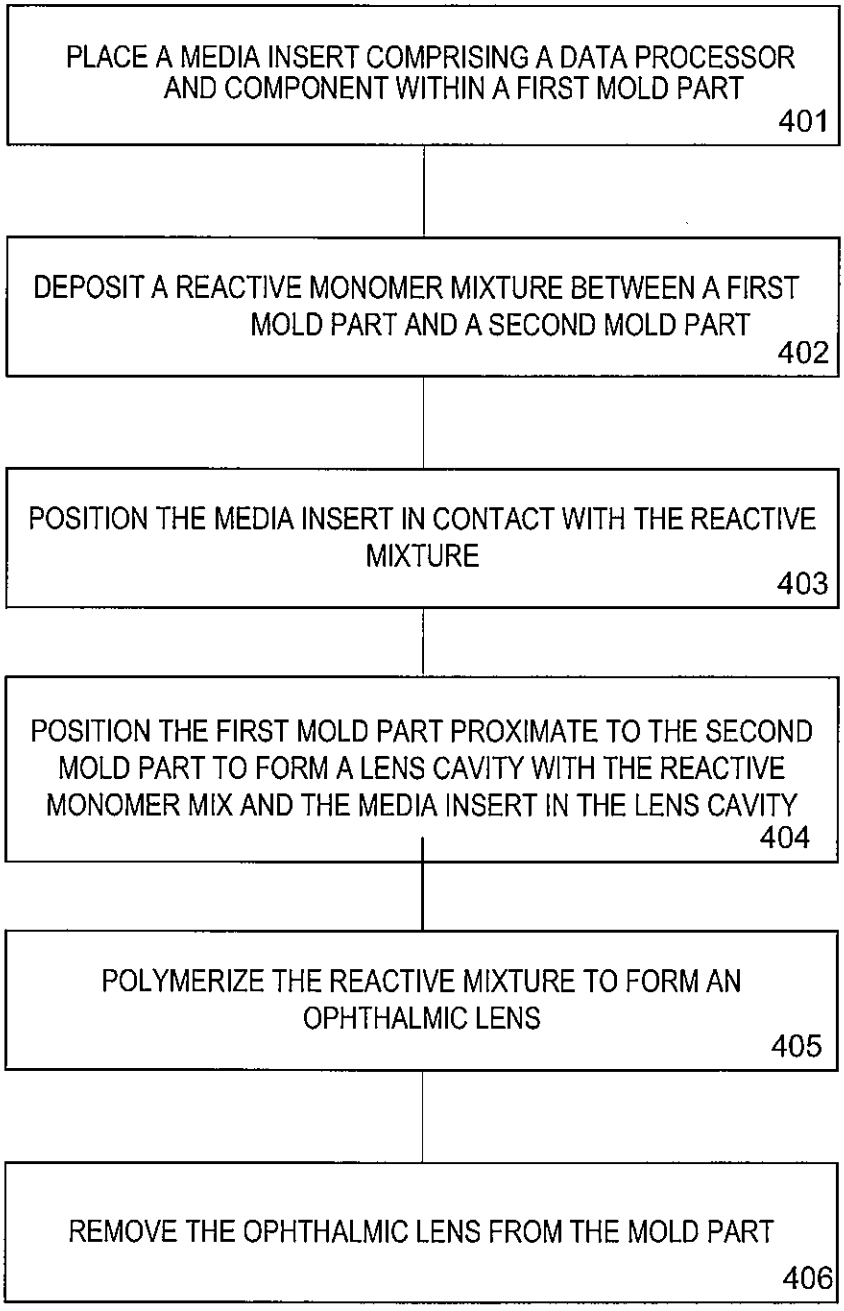
PLACE A MEDIA INSERT COMPRISING A DATA PROCESSOR AND COMPONENT WITHIN A FIRST MOLD PART
401
DEPOSIT A REACTIVE MONOMER MIXTURE BETWEEN A FIRST MOLD PART AND A SECOND MOLD PART
402
POSITION THE MEDIA INSERT IN CONTACT WITH THE REACTIVE MIXTURE
403
POSITION THE FIRST MOLD PART PROXIMATE TO THE SECOND MOLD PART TO FORM A LENS CAVITY WITH THE REACTIVE MONOMER MIX AND THE MEDIA INSERT IN THE LENS CAVITY
404
POLYMERIZE THE REACTIVE MIXTURE TO FORM AN OPHTHALMIC LENS
405
REMOVE THE OPHTHALMIC LENS FROM THE MOLD PART
406

FIG. 4

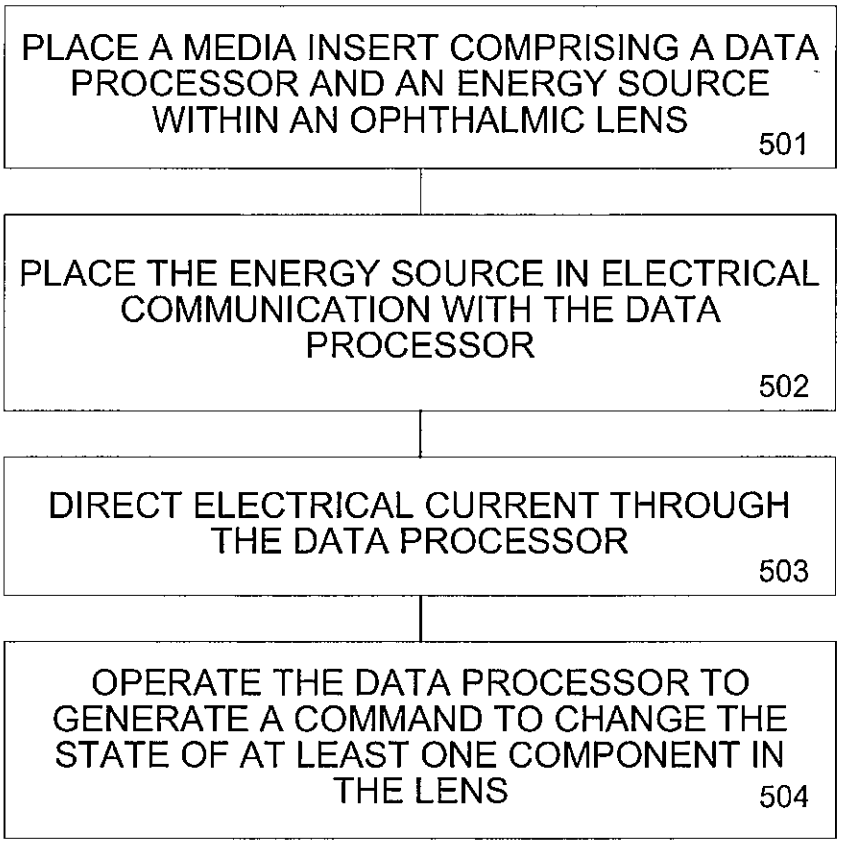
PLACE A MEDIA INSERT COMPRISING A DATA PROCESSOR AND AN ENERGY SOURCE WITHIN AN OPHTHALMIC LENS
501
PLACE THE ENERGY SOURCE IN ELECTRICAL COMMUNICATION WITH THE DATA PROCESSOR
502
DIRECT ELECTRICAL CURRENT THROUGH THE DATA PROCESSOR
503
OPERATE THE DATA PROCESSOR TO GENERATE A COMMAND TO CHANGE THE STATE OF AT LEAST ONE COMPONENT IN THE LENS
504

FIG. 5

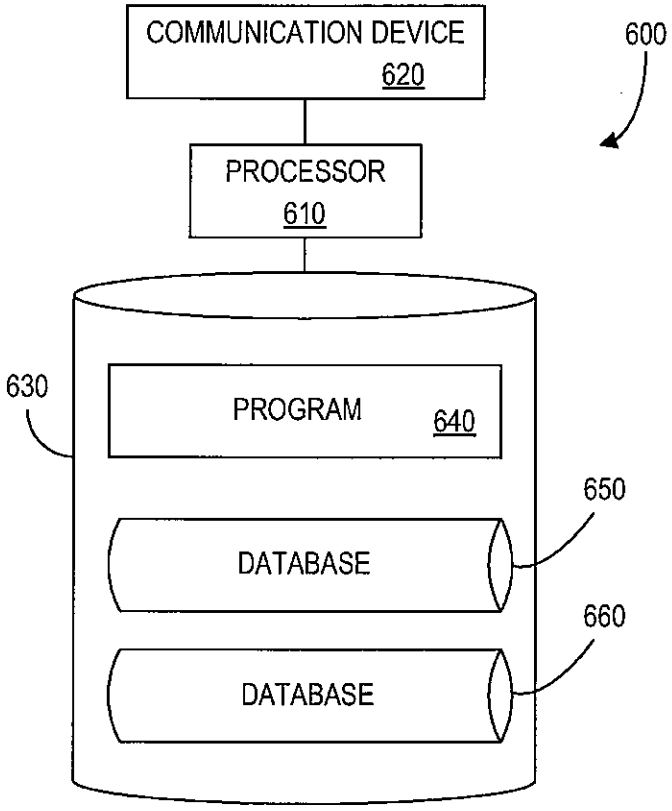
COMMUNICATION DEVICE
620
600
PROCESSOR
610
630
PROGRAM
640
650
DATABASE
660
DATABASE

FIG. 6

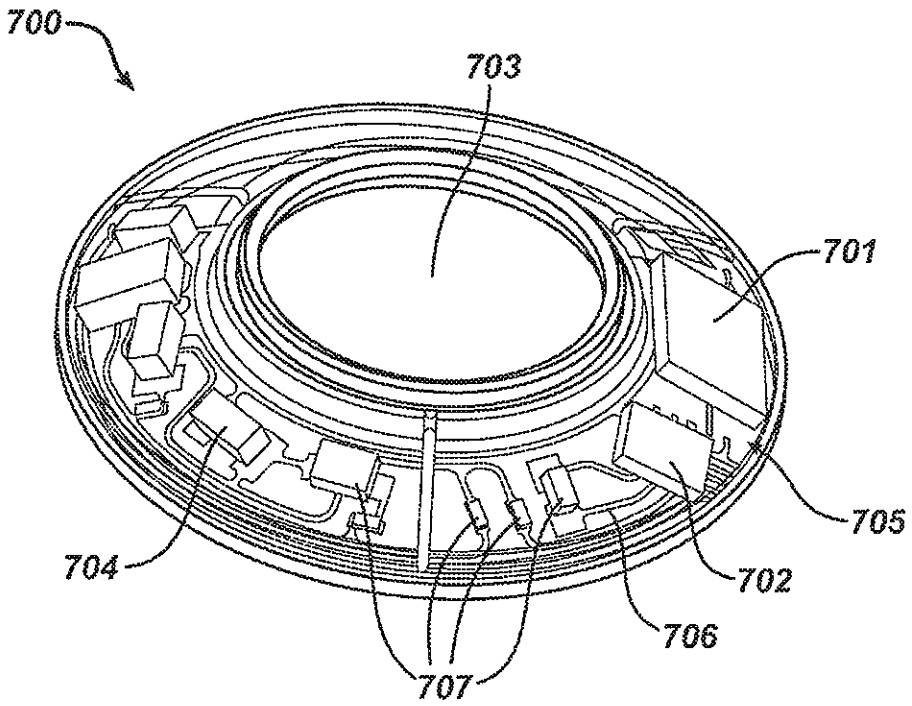

FIG. 7