(12) INTERNATIONAL APPLICATION PUBLISHED UNDER THE PATENT COOPERATION TREATY (PCT)

(19) World Intellectual Property Organization
International Bureau

(43) International Publication Date
29 September 2005 (29.09.2005)

PCT

(10) International Publication Number
WO 2005/089876 A1

(51) International Patent Classification[7]: A62B 18/02

(21) International Application Number:
PCT/GB2005/050039

(22) International Filing Date: 17 March 2005 (17.03.2005)

(25) Filing Language: English

(26) Publication Language: English

(30) Priority Data:
0406291.5 19 March 2004 (19.03.2004) GB

(71) Applicant *(for all designated States except US)*: **SCOTT HEALTH & SAFETY LTD** [GB/GB]; Pimbo Road, West Pimbo, Skelmersdale, Lancashire WN8 9RA (GB).

(72) Inventors; and

(75) Inventors/Applicants *(for US only)*: **SUTTON, Robert, Charles** [GB/GB]; 45 Hampton Road, Southport, Lancashire PR8 6SR (GB). **RICHARDSON, Grant, Stuart** [GB/GB]; DSTL, Porton Down, Salisbury, Wiltshire SP4 0JQ (GB).

(74) Agents: **BOYDELL, John, Christopher** et al.; Stevens Hewlett & Perkins, Halton House 20/23 Holborn, London EC1N 2JD (GB).

(81) Designated States *(unless otherwise indicated, for every kind of national protection available)*: AE, AG, AL, AM, AT, AU, AZ, BA, BB, BG, BR, BW, BY, BZ, CA, CH, CN, CO, CR, CU, CZ, DE, DK, DM, DZ, EC, EE, EG, ES, FI, GB, GD, GE, GH, GM, HR, HU, ID, IL, IN, IS, JP, KE, KG, KP, KR, KZ, LC, LK, LR, LS, LT, LU, LV, MA, MD, MG, MK, MN, MW, MX, MZ, NA, NI, NO, NZ, OM, PG, PH, PL, PT, RO, RU, SC, SD, SE, SG, SK, SL, SM, SY, TJ, TM, TN, TR, TT, TZ, UA, UG, US, UZ, VC, VN, YU, ZA, ZM, ZW.

(84) Designated States *(unless otherwise indicated, for every kind of regional protection available)*: ARIPO (BW, GH, GM, KE, LS, MW, MZ, NA, SD, SL, SZ, TZ, UG, ZM,

[Continued on next page]

(54) Title: RESPIRATORS

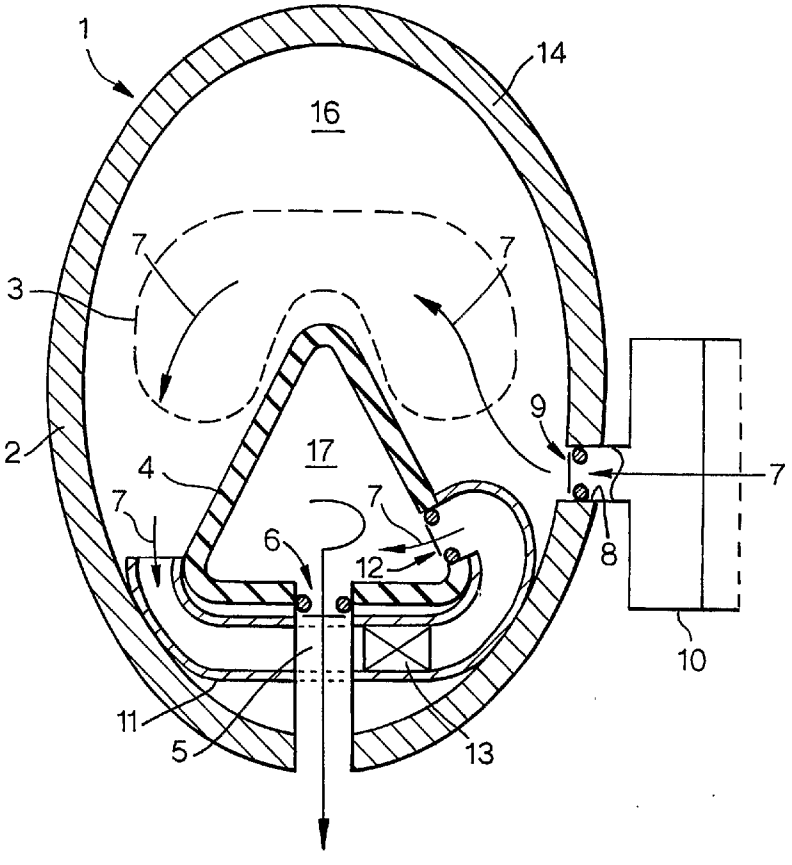

(57) Abstract: A respirator comprising an outer mask (2) in which is defined a main volume (16) and an oronasal mask (4) located within the outer mask and defining a secondary volume (17). Air for breathing enters the mask (2) via a one-way valve (9) and filter (10). Exhaled air exits the mask (4) via an exhale conduit (5) fitted with an exhale valve (6). A conduit (11) is provided for the passage of air from the outer mask (2) to the oronasal mask (4). The conduit (11) is fitted with a one-way valve (12) and a filter (13). The filter (13) is such as to filter either particular or vapour challenges, or a mixture of these, as required.

WO 2005/089876 A1

ZW), Eurasian (AM, AZ, BY, KG, KZ, MD, RU, TJ, TM), European (AT, BE, BG, CH, CY, CZ, DE, DK, EE, ES, FI, FR, GB, GR, HU, IE, IS, IT, LT, LU, MC, NL, PL, PT, RO, SE, SI, SK, TR), OAPI (BF, BJ, CF, CG, CI, CM, GA, GN, GQ, GW, ML, MR, NE, SN, TD, TG).

Published:

— *with international search report*

— *before the expiration of the time limit for amending the claims and to be republished in the event of receipt of amendments*

For two-letter codes and other abbreviations, refer to the "Guidance Notes on Codes and Abbreviations" appearing at the beginning of each regular issue of the PCT Gazette.