(12) INTERNATIONAL APPLICATION PUBLISHED UNDER THE PATENT COOPERATION TREATY (PCT)

(19) World Intellectual Property Organization
International Bureau

(43) International Publication Date
23 August 2012 (23.08.2012)

WIPO | PCT

(10) International Publication Number
WO 2012/110775 A1

(51) International Patent Classification:
*B01J 8/04* (2006.01) *C10G 49/00* (2006.01)
*C10G 45/32* (2006.01) *C07C 7/167* (2006.01)

(21) International Application Number:
PCT/GB2012/050056

(22) International Filing Date:
12 January 2012 (12.01.2012)

(25) Filing Language: English

(26) Publication Language: English

(30) Priority Data:
1102551.7 14 February 2011 (14.02.2011) GB

(71) Applicant *(for all designated States except US)*: **DAVY PROCESS TECHNOLOGY LIMITED** [GB/GB]; 10 Eastbourne Terrace, London, W2 6LG (GB).

(72) Inventors; and
(75) Inventors/Applicants *(for US only)*: **LORD, Edward Adrian** [GB/GB]; 10 Eastbourne Terrace, London Greater London W2 6LG (GB). **REASON, Arthur James** [GB/GB]; The Technology Centre, Princeton Drive, Thornaby Stock-on-Tees TS17 6PY (GB).

(74) Agent: **SMAGGASGALE, Gillian Helen**; 55 Drury Lane, London Greater, London, WC2B 5SQ (GB).

(81) Designated States *(unless otherwise indicated, for every kind of national protection available)*: AE, AG, AL, AM, AO, AT, AU, AZ, BA, BB, BG, BH, BR, BW, BY, BZ, CA, CH, CL, CN, CO, CR, CU, CZ, DE, DK, DM, DO, DZ, EC, EE, EG, ES, FI, GB, GD, GE, GH, GM, GT, HN, HR, HU, ID, IL, IN, IS, JP, KE, KG, KM, KN, KP, KR, KZ, LA, LC, LK, LR, LS, LT, LU, LY, MA, MD, ME, MG, MK, MN, MW, MX, MY, MZ, NA, NG, NI, NO, NZ, OM, PE, PG, PH, PL, PT, QA, RO, RS, RU, RW, SC, SD, SE, SG, SK, SL, SM, ST, SV, SY, TH, TJ, TM, TN, TR, TT, TZ, UA, UG, US, UZ, VC, VN, ZA, ZM, ZW.

(84) Designated States *(unless otherwise indicated, for every kind of regional protection available)*: ARIPO (BW, GH, GM, KE, LR, LS, MW, MZ, NA, RW, SD, SL, SZ, TZ, UG, ZM, ZW), Eurasian (AM, AZ, BY, KG, KZ, MD, RU, TJ, TM), European (AL, AT, BE, BG, CH, CY, CZ, DE, DK, EE, ES, FI, FR, GB, GR, HR, HU, IE, IS, IT, LT, LU, LV, MC, MK, MT, NL, NO, PL, PT, RO, RS, SE, SI, SK, SM, TR), OAPI (BF, BJ, CF, CG, CI, CM, GA, GN, GQ, GW, ML, MR, NE, SN, TD, TG).

*[Continued on next page]*

(54) Title: REACTOR

Fig. 3

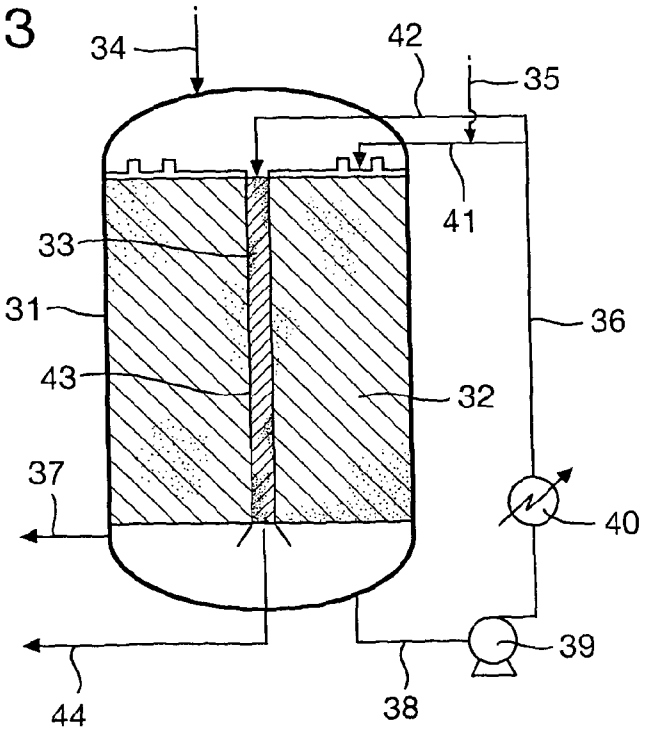


(57) Abstract: A liquid/gas reactor comprising: (a) a bulk catalyst bed and means for supplying fresh feed and recycled at least partially converted liquid product stream to said bulk catalyst bed; (b) means for collecting an at least partially converted liquid product stream from said bulk catalyst bed and recyling at least a portion thereof to step (a); (c) a minor catalyst bed extending substantially vertically through the bulk catalyst bed and means for supplying recycled at least partially converted product stream only to said minor catalyst bed; and (d) a separating wall between said bulk and said minor catalyst bed.

WO 2012/110775 A1

**Published**:

— *with international search report (Art. 21(3))*