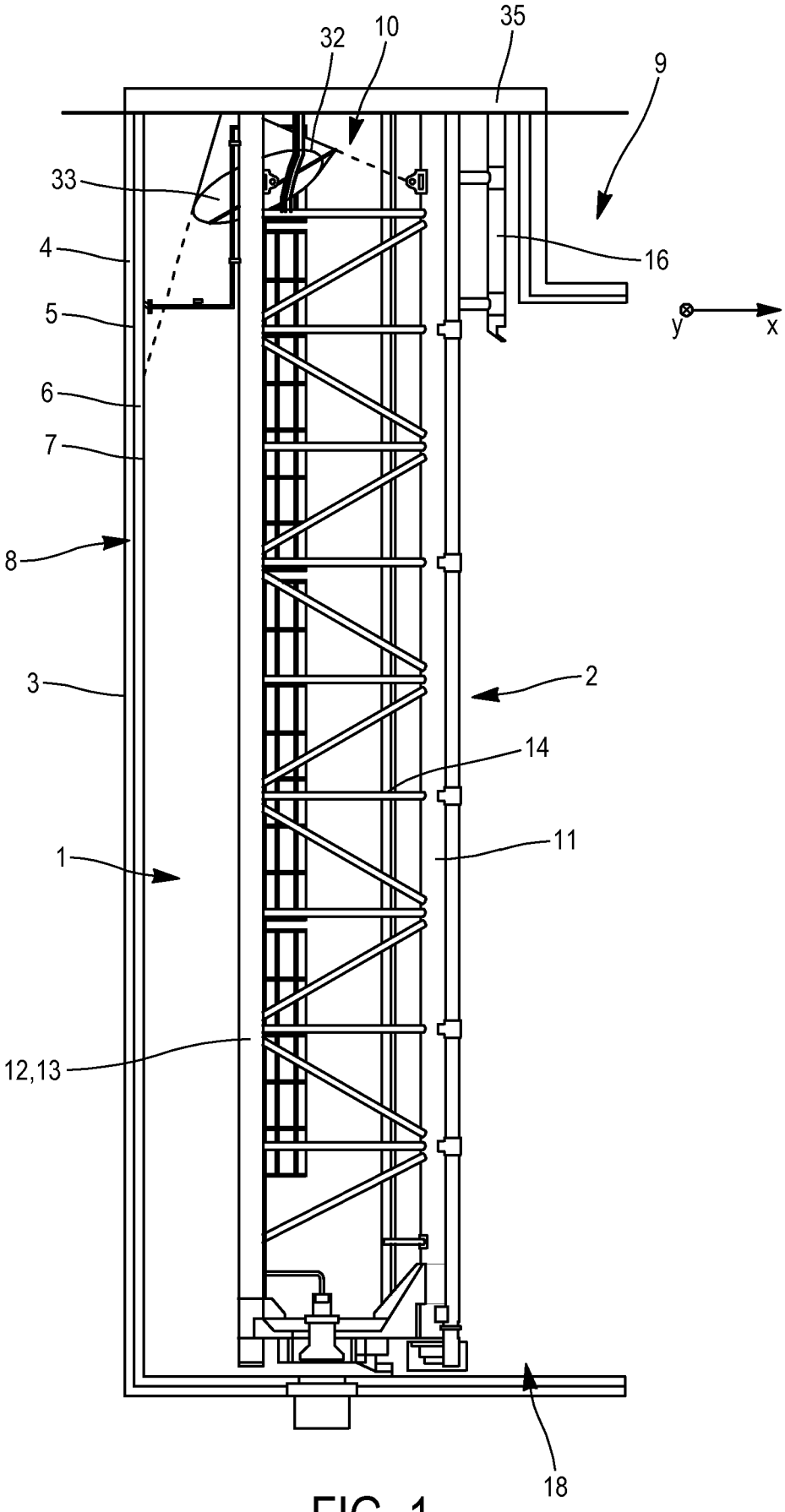

FIG. 1

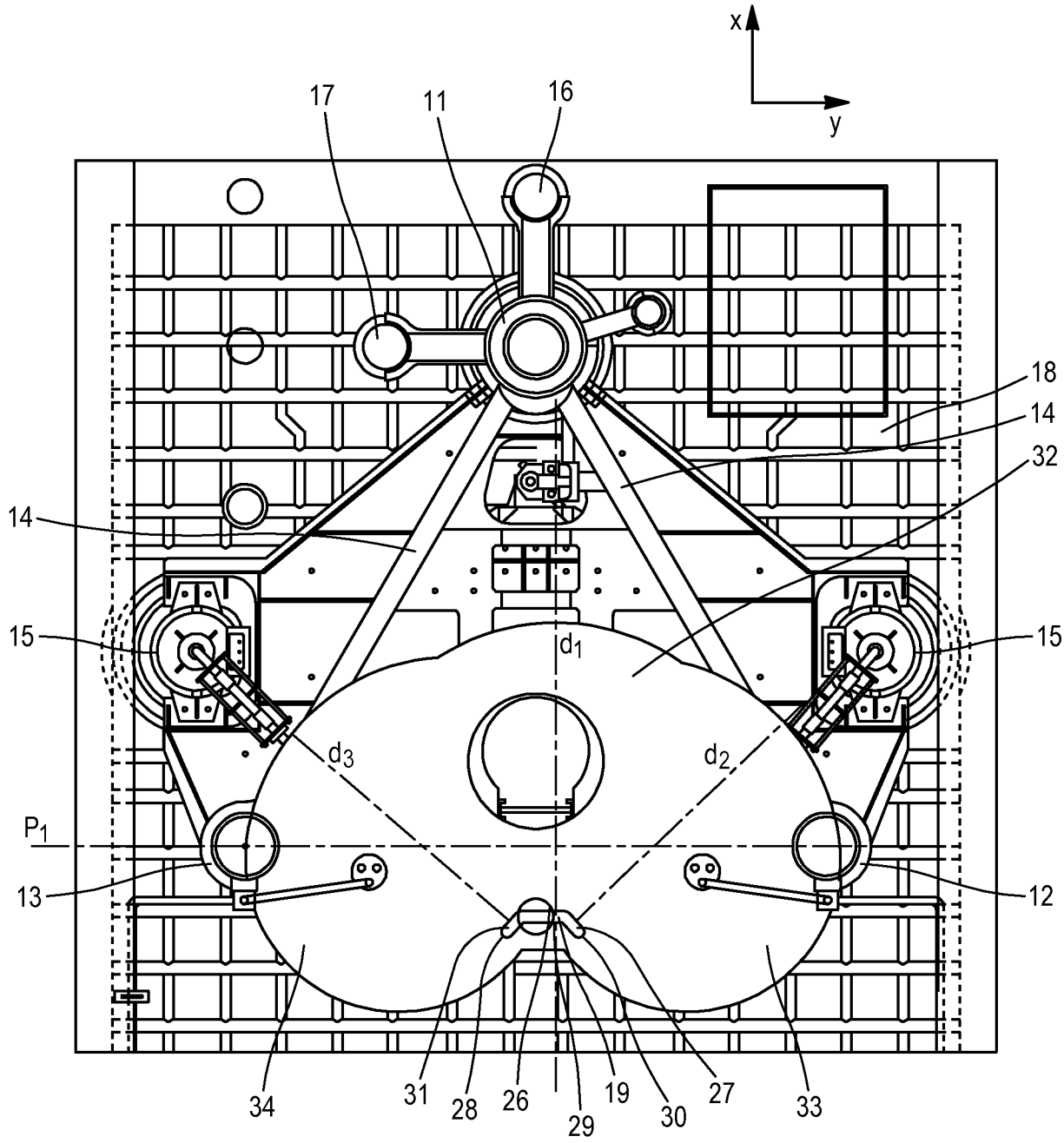
x
y
17
11
16
18
14
32
14
15
15
d_1
d_3
d_2
P_1
13
12
34
31
28
26
29
19
30
27
33

FIG. 2

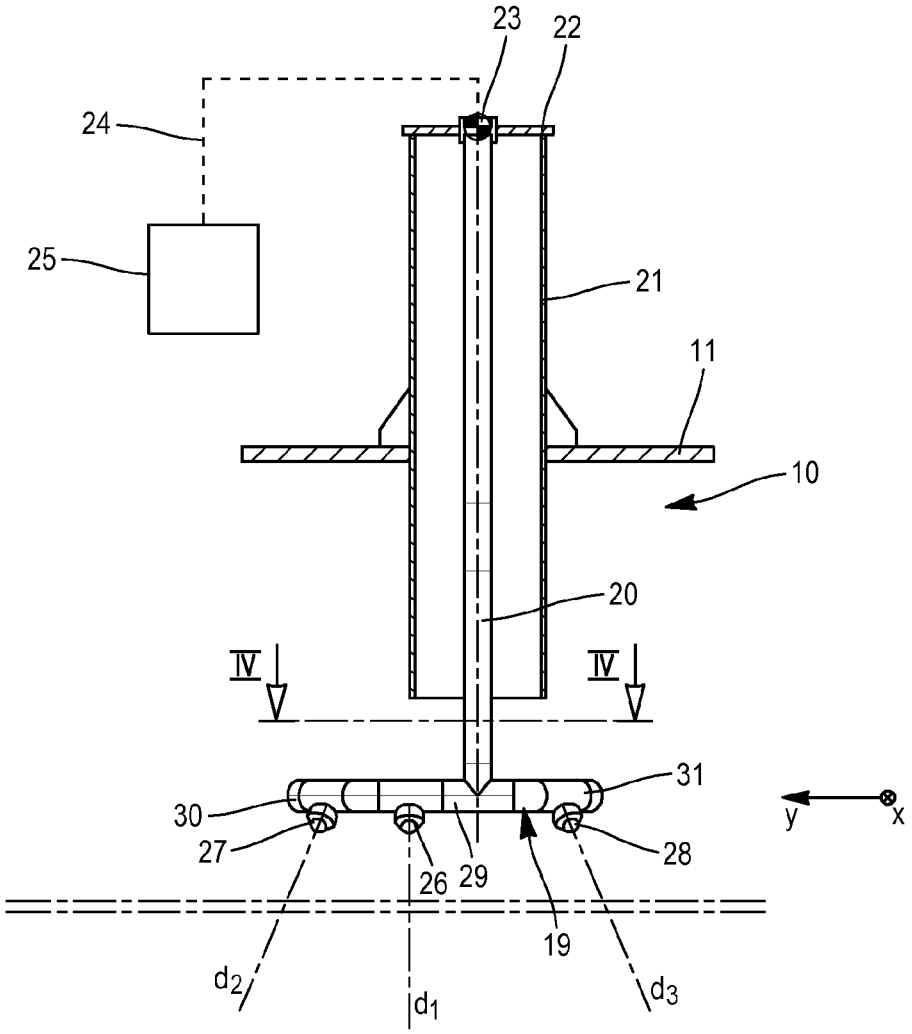
23
22
24
25
21
11
10
20
IV
IV
31
30
27
26
29
28
y
x
19
d_2
d_1
d_3

FIG. 3

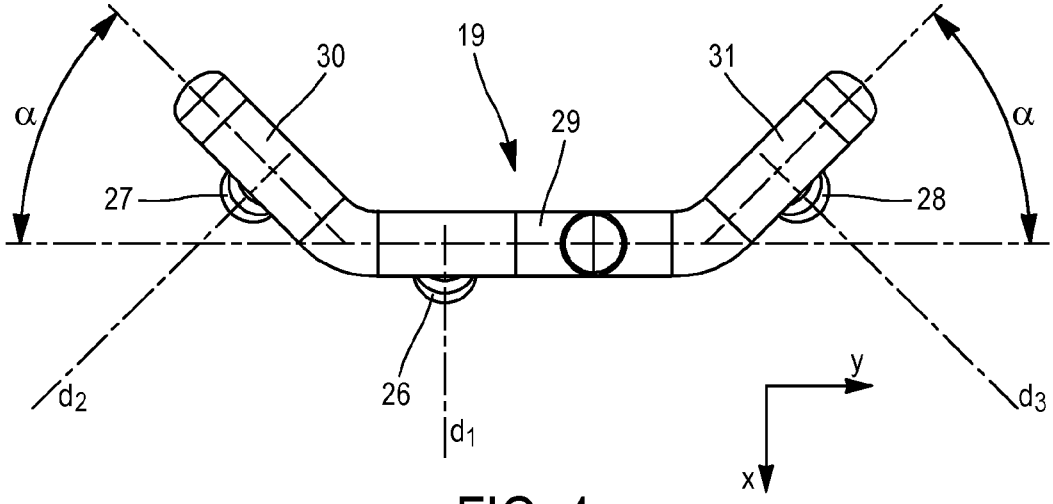
α
19
30
31
29
α
27
28
26
d_2
d_1
d_3
y
x

FIG. 4

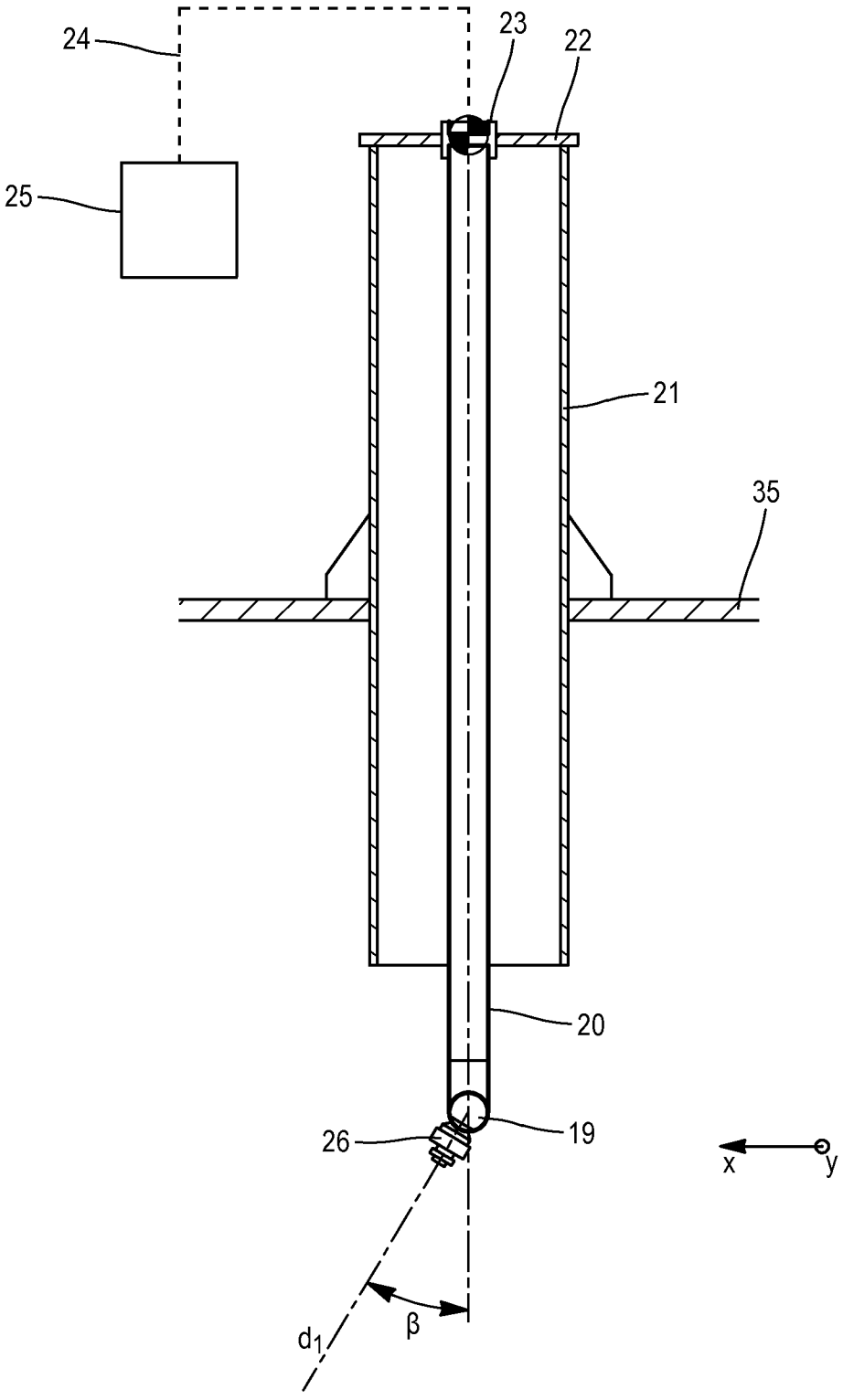

FIG. 5

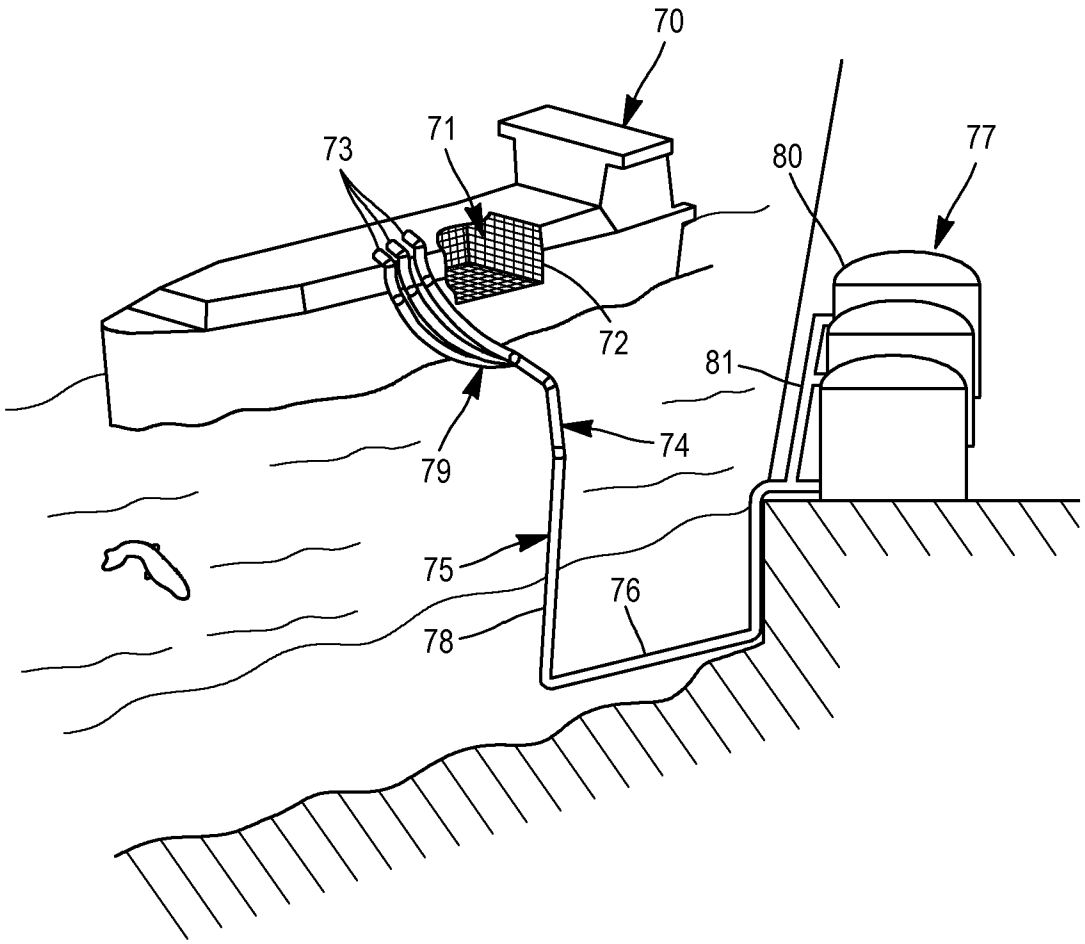

FIG. 6

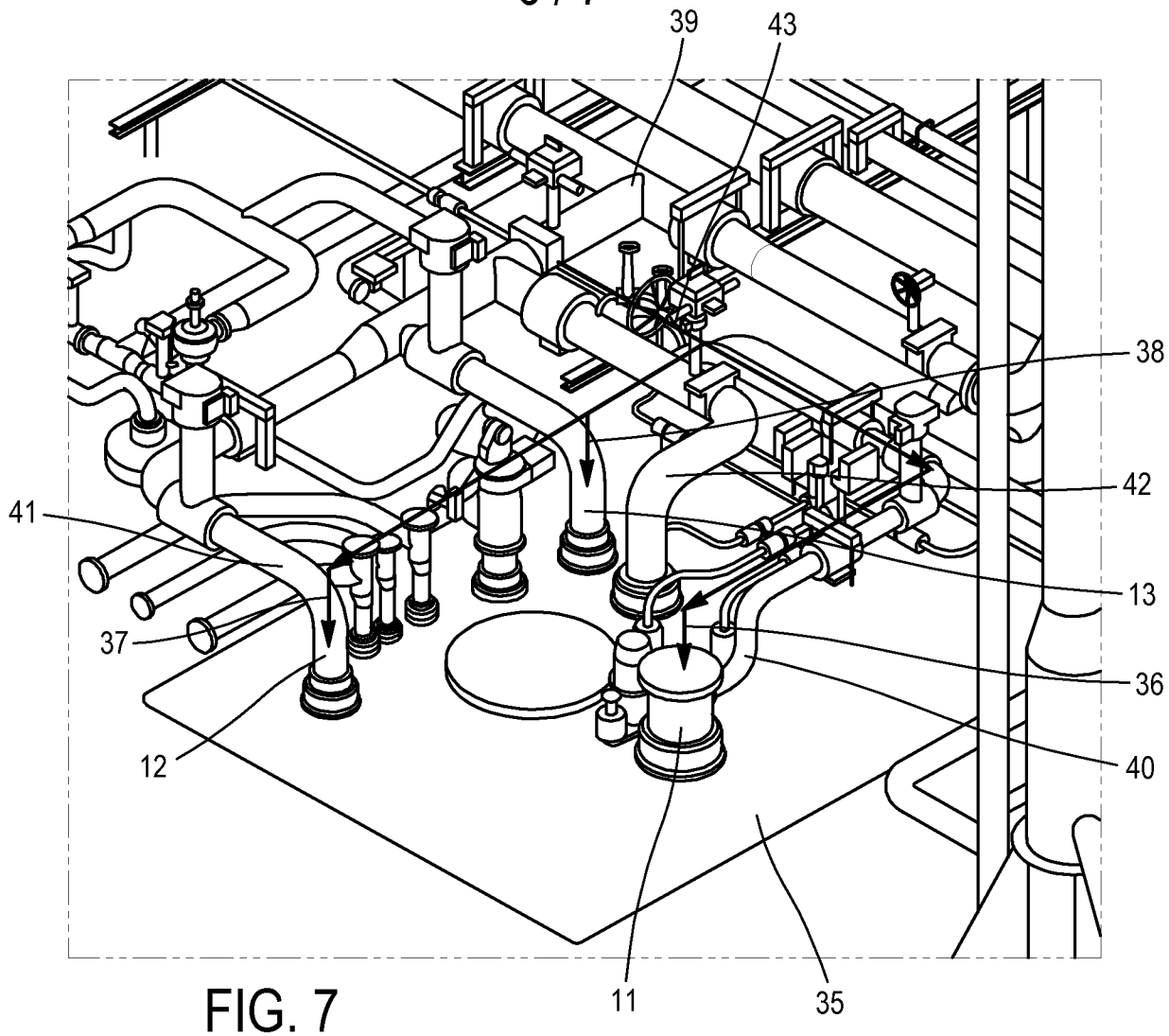

FIG. 7

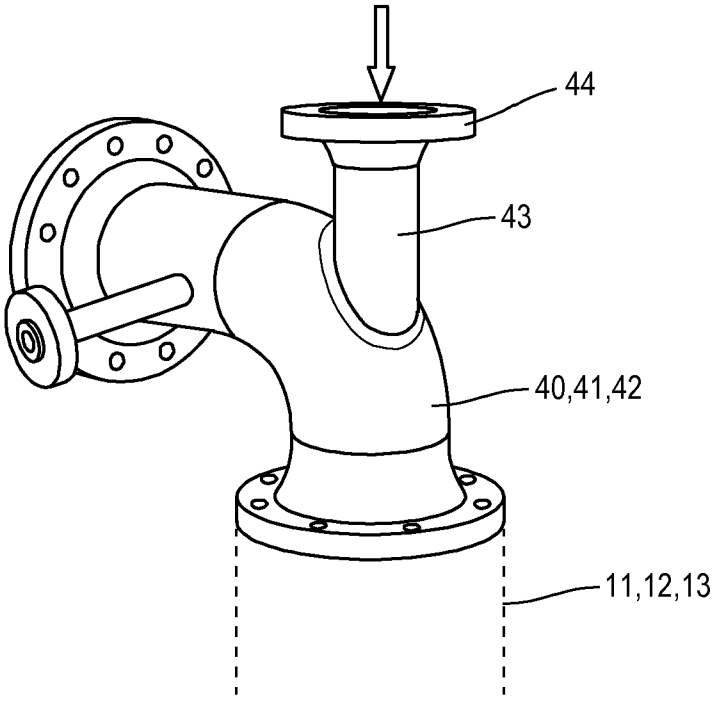

FIG. 8

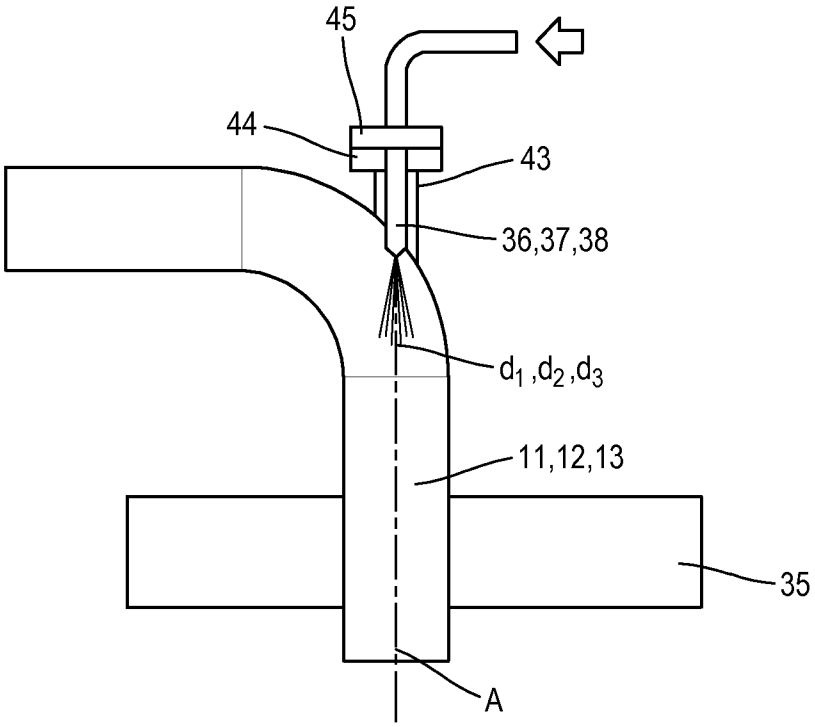
45
44
43
36,37,38
d_1, d_2, d_3
11,12,13
35
A

FIG. 9

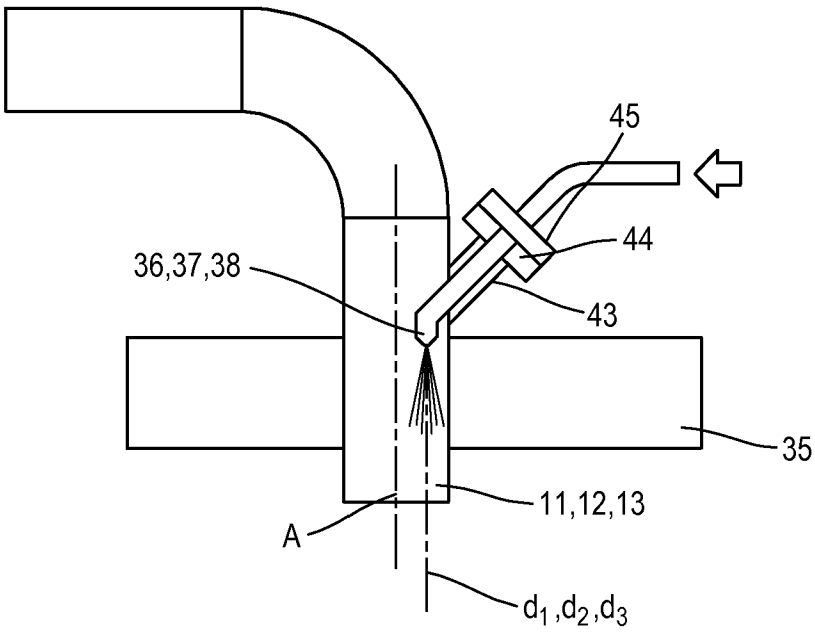
45
44
36,37,38
43
35
11,12,13
A
d_1, d_2, d_3

FIG. 10