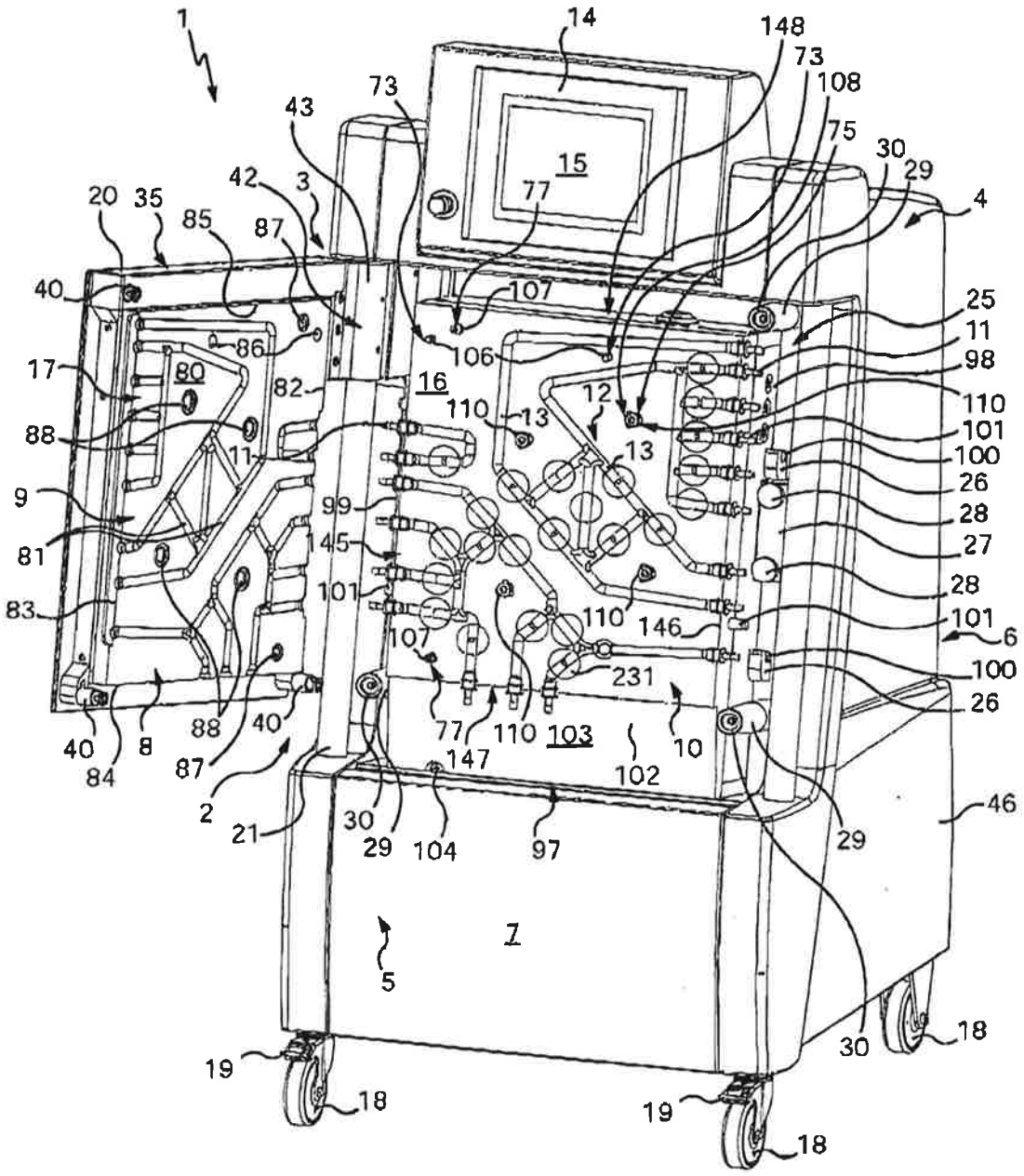
1
14
148
73
108
75
30
29
4
15
77
73
43
42
3
20
35
85
87
40
107
25
11
98
110
101
100
26
28
27
28
101
6
100
26
86
106
17
80
82
16
110
13
12
13
88
11
9
99
81
145
101
83
110
146
107
231
40
8
88
40
77
110
103
10
84
87
147
102
2
21
30
29
104
97
29
46
7
5
30
18
19
18
19
18

Fig. 1

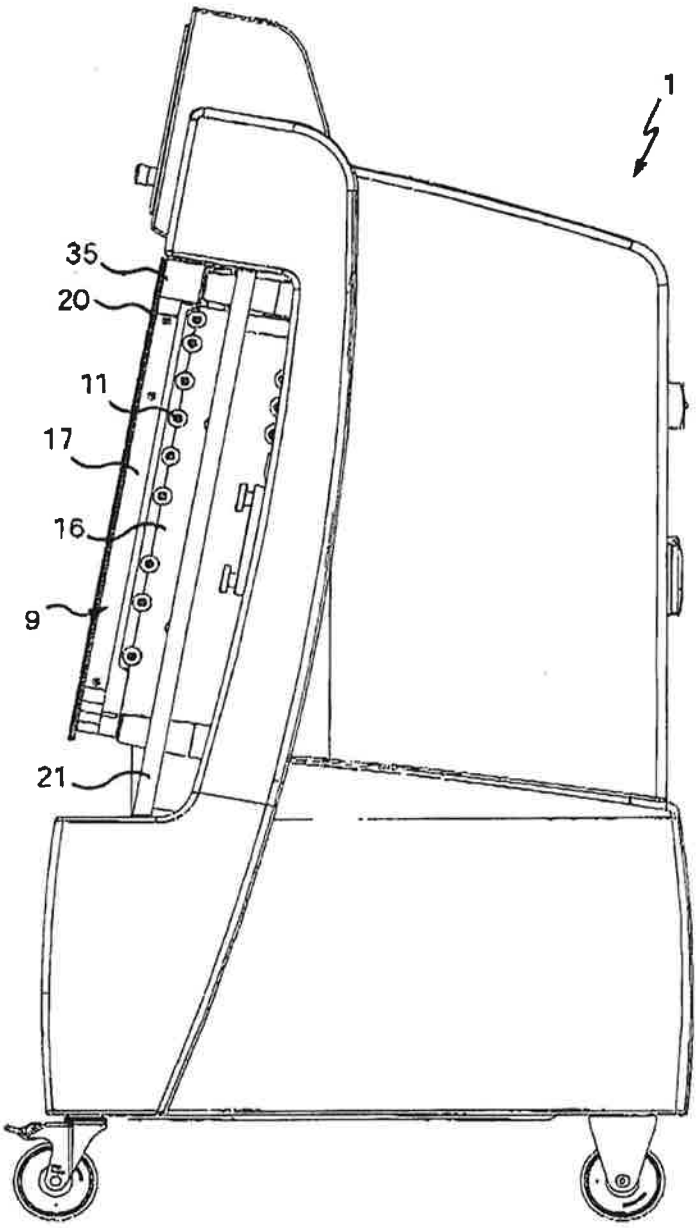

Fig. 2

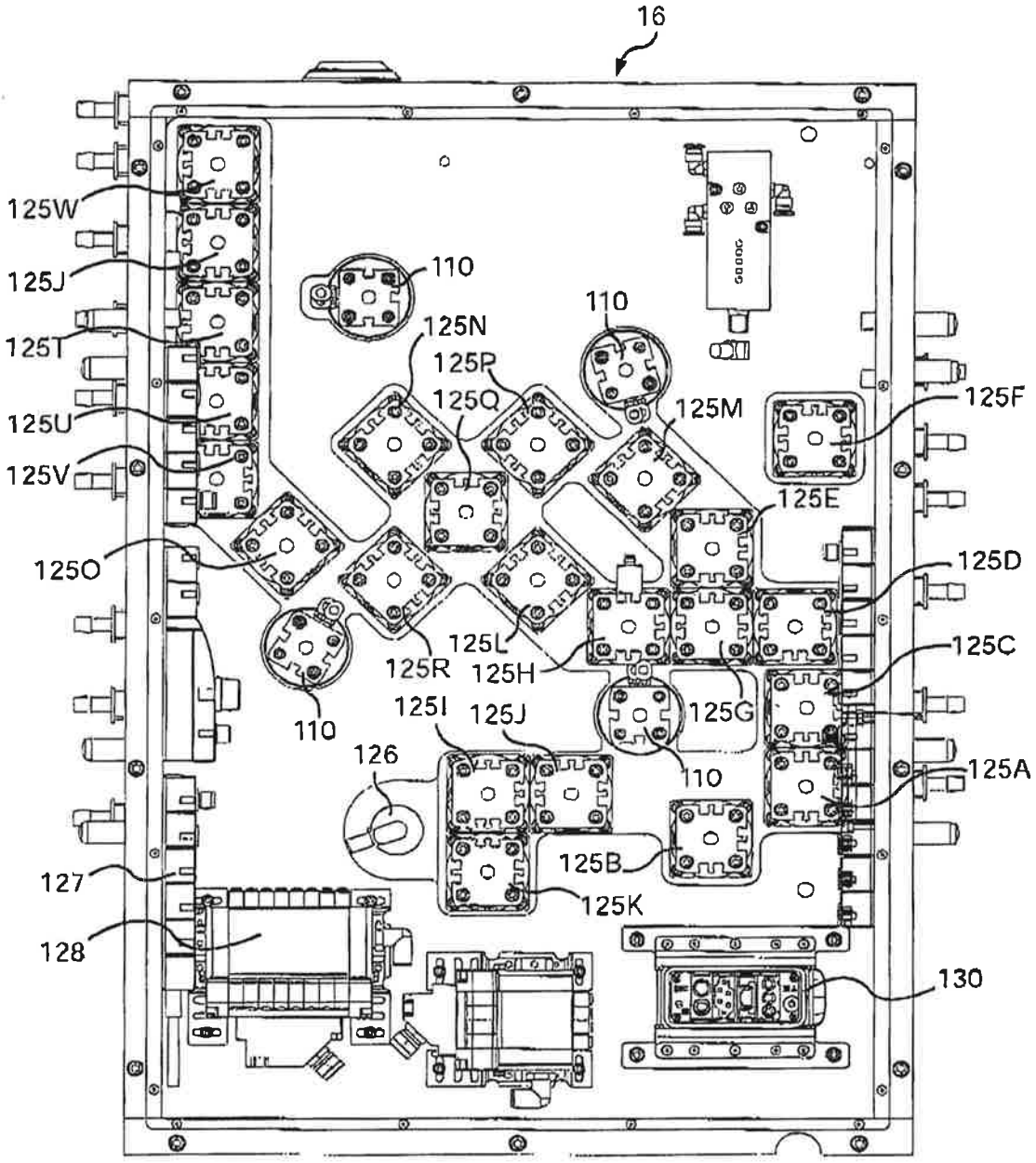
16
125W
125J
125T
125U
125V
125O
110
125N
125P
125Q
110
125M
125F
125E
125D
125C
125L
125R
125H
125G
110
125I
125J
126
110
125A
125B
127
125K
128
130

Fig. 3

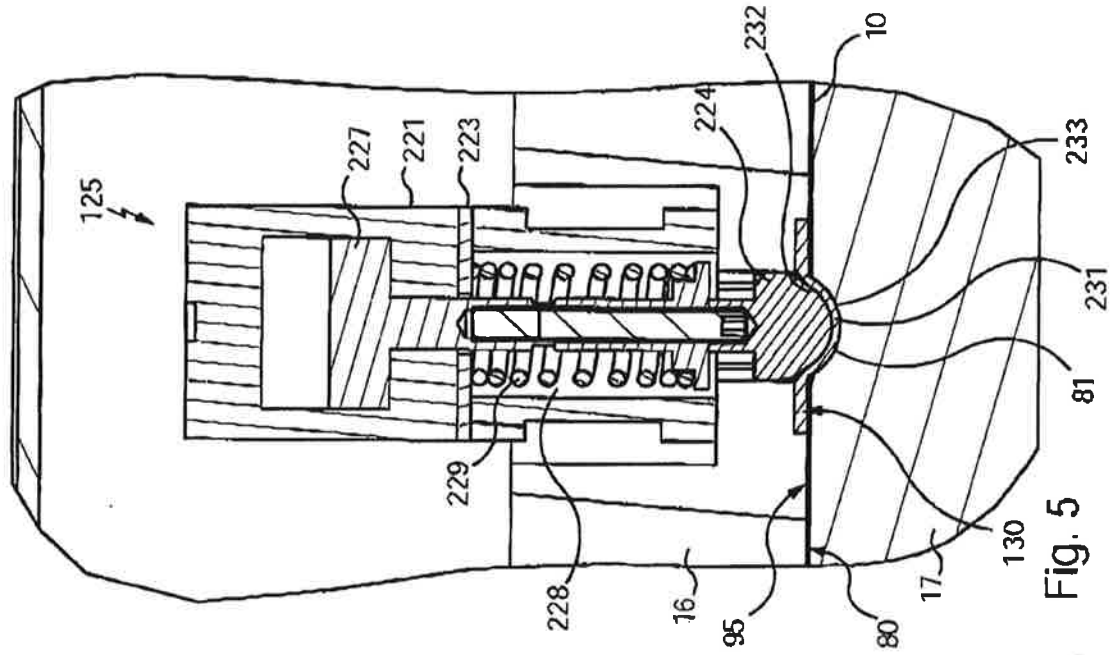
125
227
221
223
224
232
10
233
231
81
229
228
16
95
80
17
130

Fig. 5

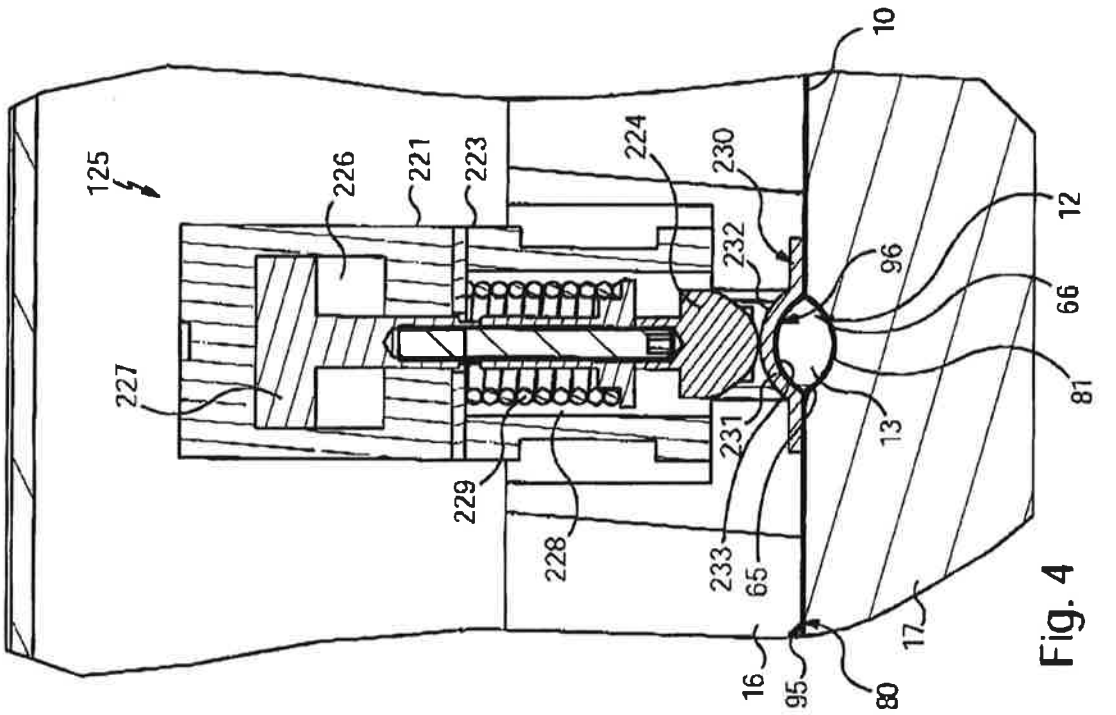
125
226
221
223
224
230
232
10
12
96
66
81
227
229
228
231
233
65
13
16
95
80
17

Fig. 4

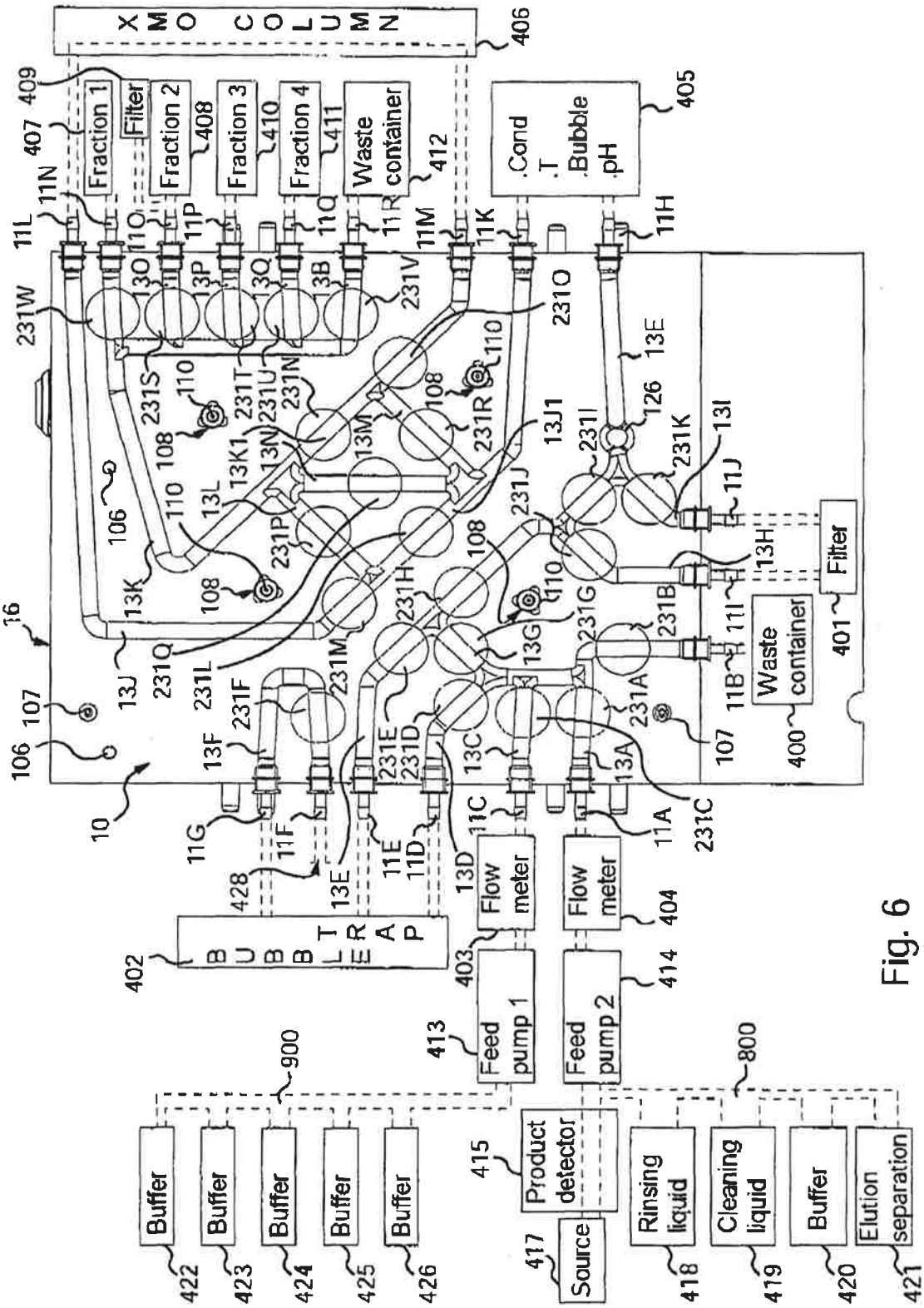
XMO COLUMN
Fraction 1
Filter
Fraction 2
Fraction 3
Fraction 4
Waste container
.Cond
.T
.Bubble
.pH
Filter
Waste container
BUBBLE TRAP
Flow meter
Flow meter
Feed pump 1
Feed pump 2
Buffer
Buffer
Buffer
Buffer
Buffer
Product detector
Source
Rinsing liquid
Cleaning liquid
Buffer
Elution separation

Fig. 6

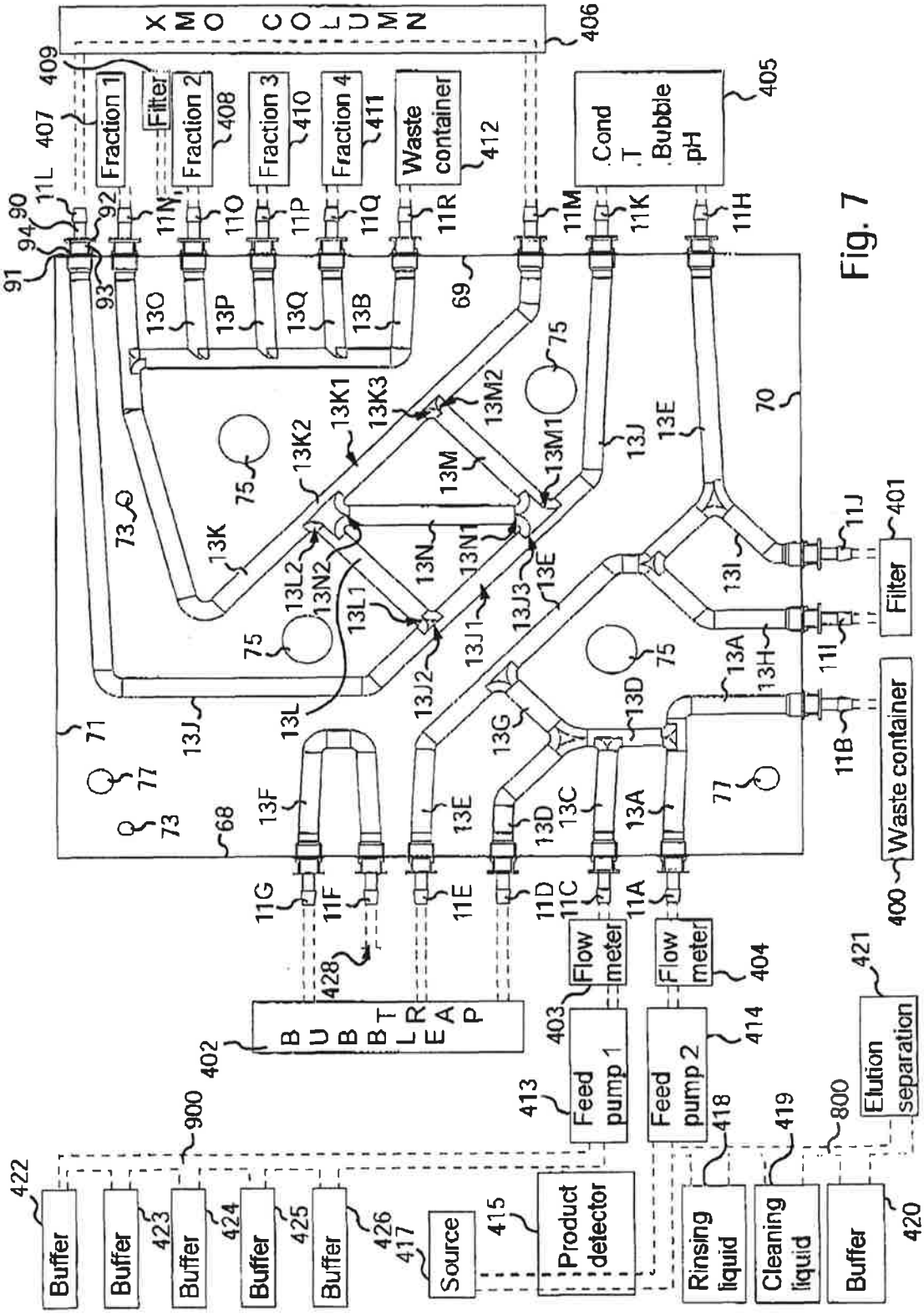
XMO COLUMN
Fraction 1
Filter
Fraction 2
Fraction 3
Fraction 4
Waste container
Cond
T
Bubble
pH
Filter
Waste container
BUBBLE TRAP
Flow meter
Flow meter
Feed pump 1
Feed pump 2
Elution separation
Buffer
Buffer
Buffer
Buffer
Buffer
Source
Product detector
Rinsing liquid
Cleaning liquid
Buffer

Fig. 7

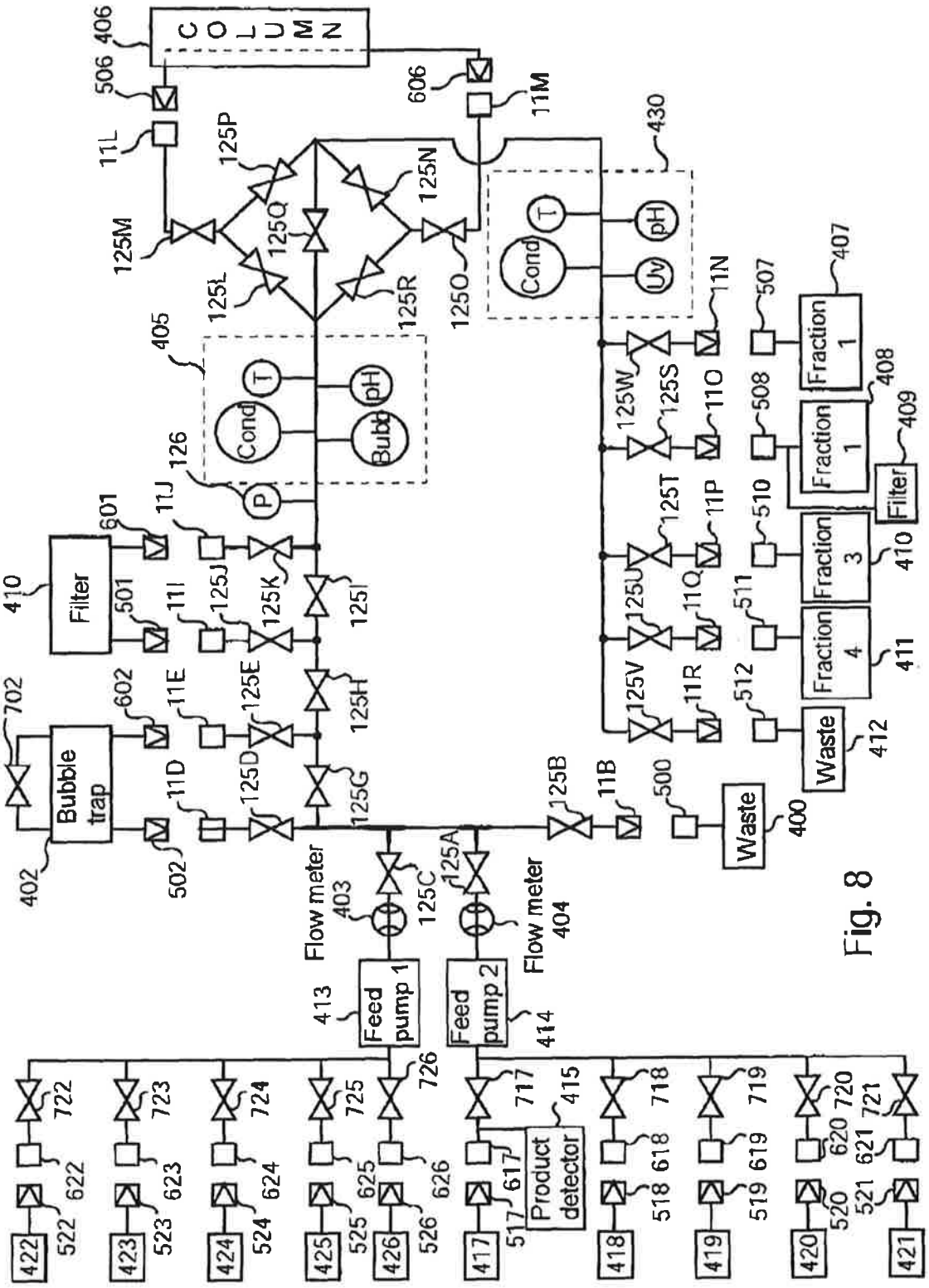
COLUMN
406
506
11L
606
11M
125P
125N
125M
125Q
125L
125R
125O
430
Cond
T
pH
Uv
405
Cond
T
pH
Bubb
126
P
Filter
410
601
501
11J
11I
125J
125K
125I
702
Bubble trap
402
602
11E
125E
125H
502
11D
125D
125G
125B
11B
500
Waste
400
125W
125S
11N
11O
125T
11P
125U
11Q
125V
11R
507
508
510
511
512
Fraction 1
407
Fraction 1
408
Filter
409
Fraction 3
410
Fraction 4
411
Waste
412
Flow meter
403
125C
125A
Flow meter
404
Feed pump 1
413
Feed pump 2
414
722
723
724
725
726
717
415
718
719
720
721
622
623
624
625
626
617
Product detector
618
619
620
621
522
523
524
525
526
517
518
519
520
521
422
423
424
425
426
417
418
419
420
421

Fig. 8