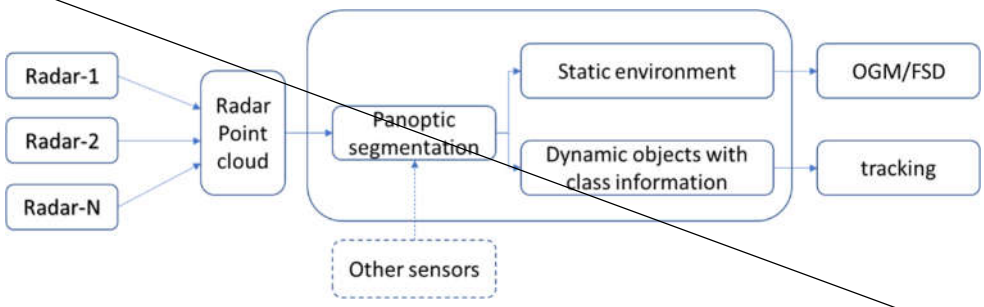

Figure-1: Environment perception using radar

~~Figure-1 depicts a system for environment perception based on automotive radar where radar point cloud from one radar or multiple radars can be used. A compact panoptic segmentation is developed to generate point-wise segmentation results that distinguish between static environment and dynamic objects and at the same time detect each dynamic object with both class information and target identity. The segmentation results are then processed by other functions like OGM, FSD, tracking, etc.~~

1) General radar system design

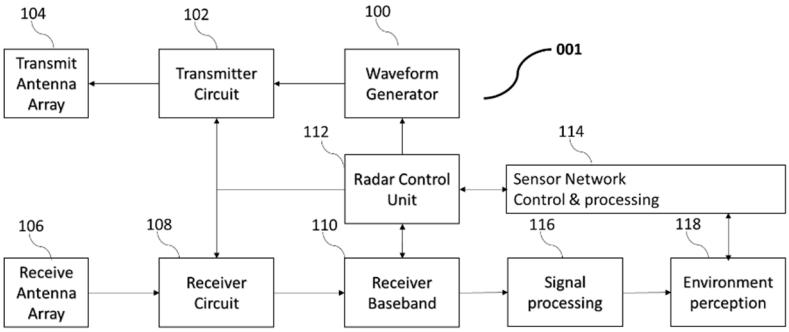

Figure-1: Radar system architecture

2) Signal processing unit

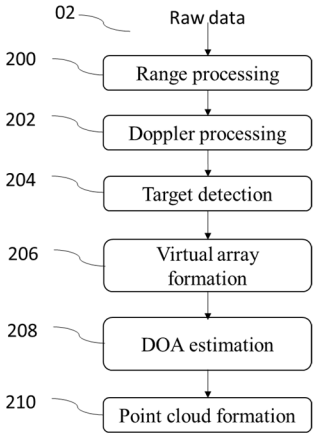

Figure-2: Functionality blocks in the signal processing unit.

3) Functional blocks in the compact environment perception unit

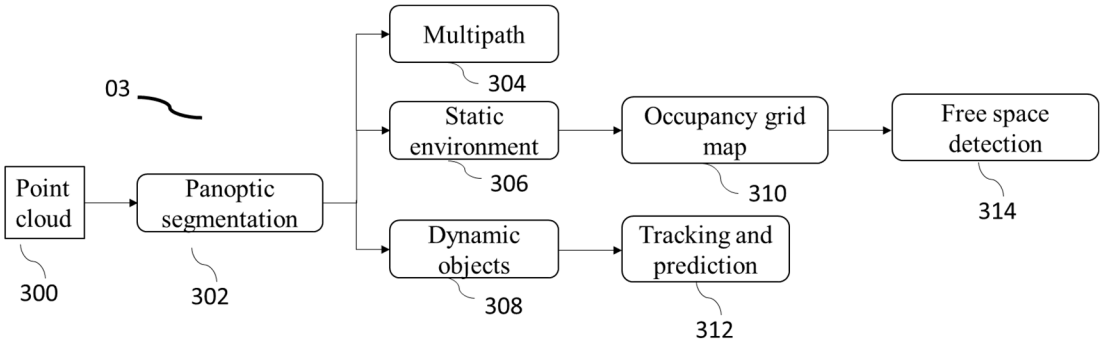

Figure-3: Environment perception

4) Panoptic segmentation

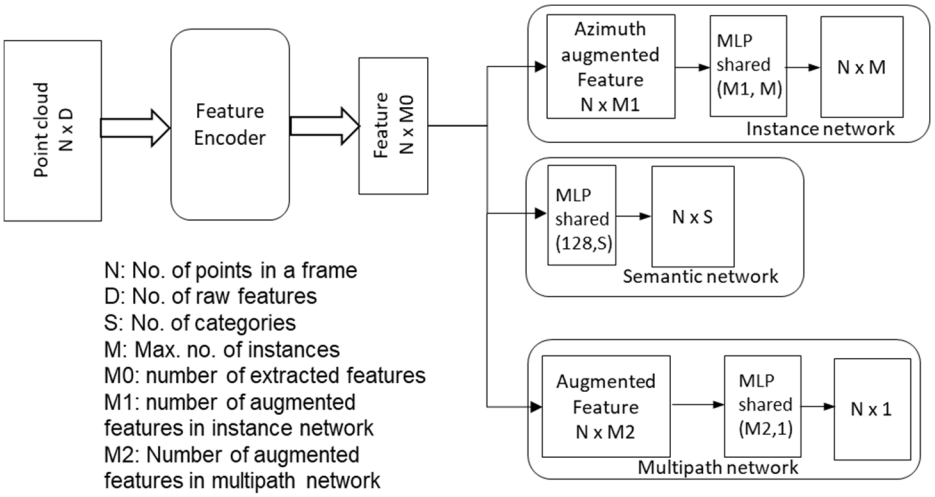

Figure-4: Block diagram of the panoptic segmentation.

5) Panoptic segmentation labeling

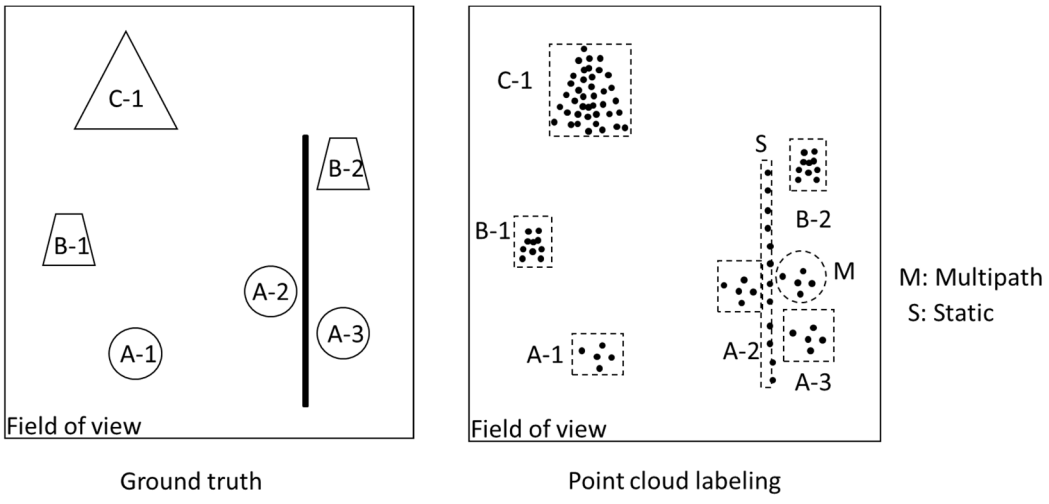

Figure-5: Point cloud labeling method for panoptic segmentation