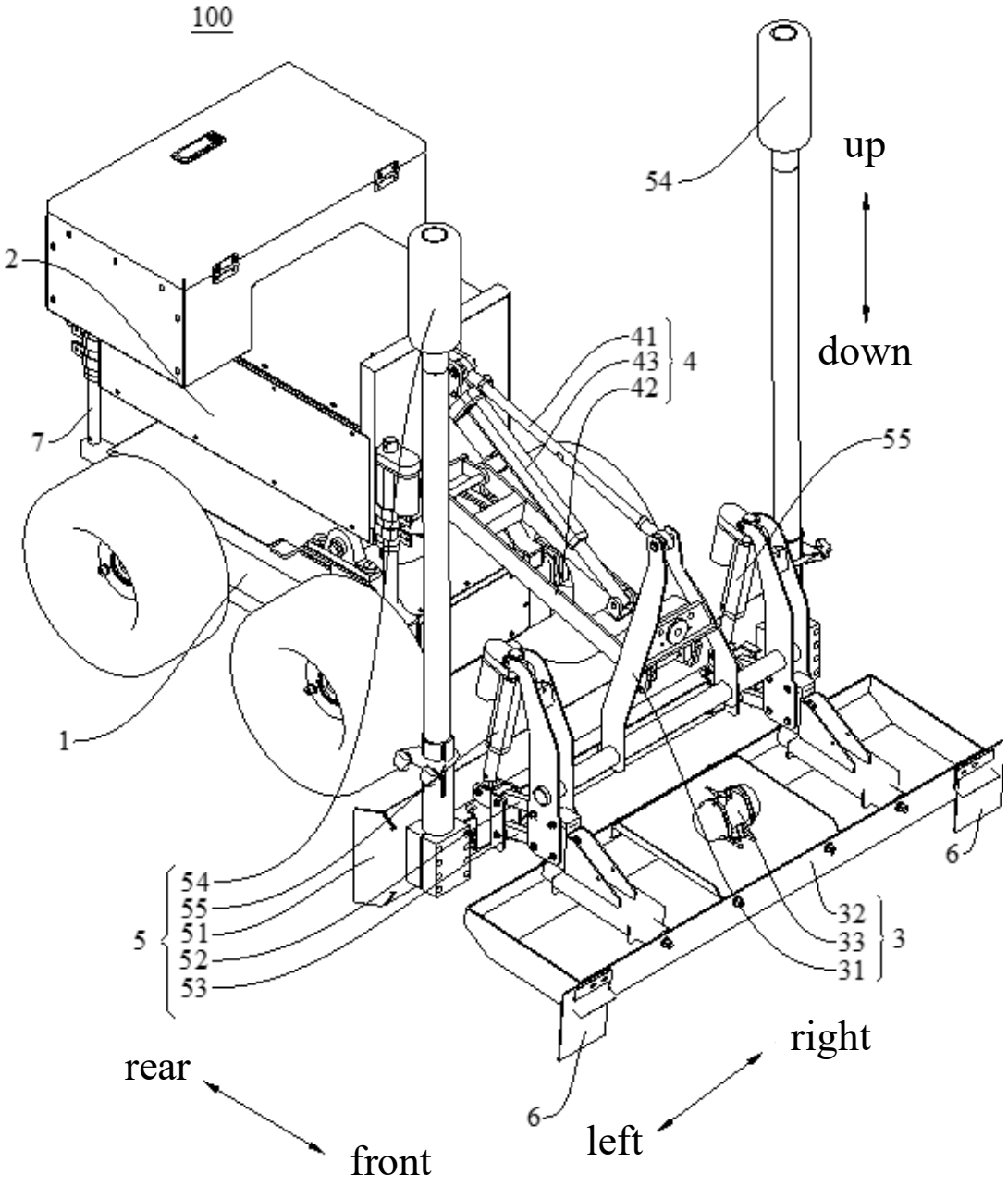
100
2
7
1
54
up
down
41
43
42
4
55
54
55
51
52
53
5
32
33
31
3
6
6
rear
front
right
left

FIG. 1

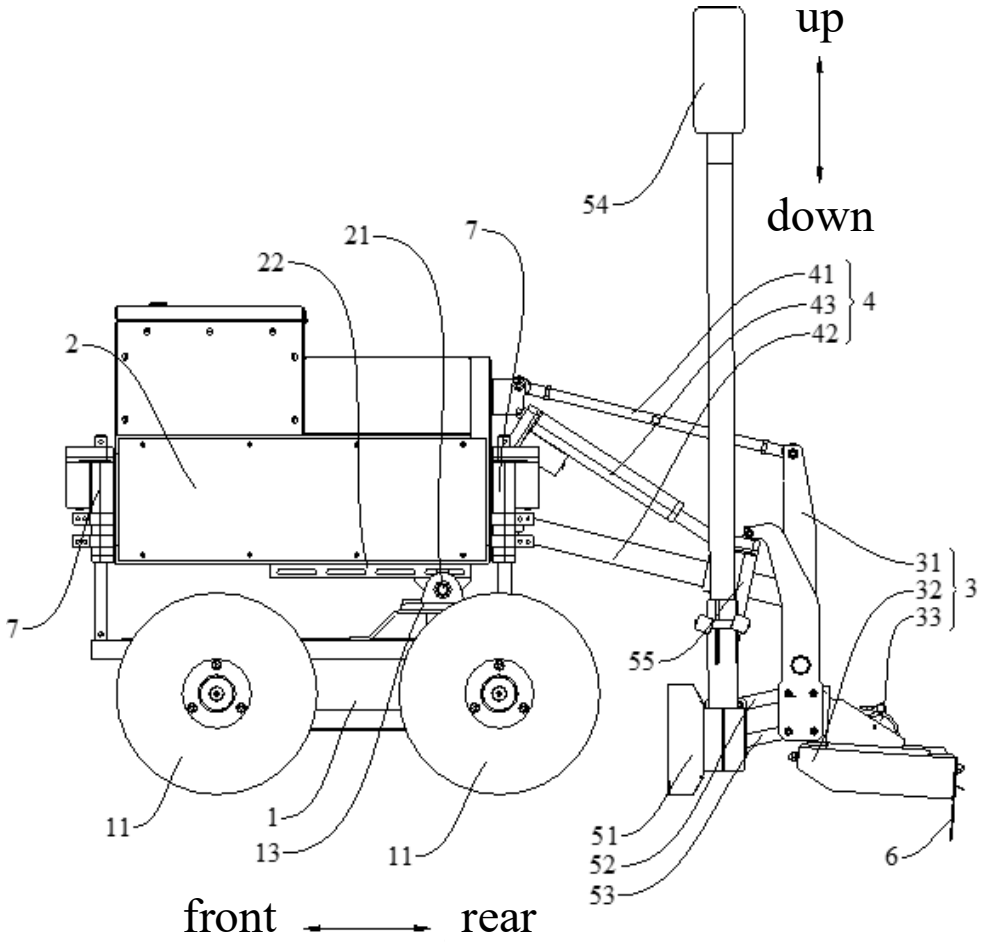
up
down
54
21
22
7
41
43
42
4
2
31
32
33
3
7
55
11
1
13
11
51
52
53
6
front
rear

FIG. 2

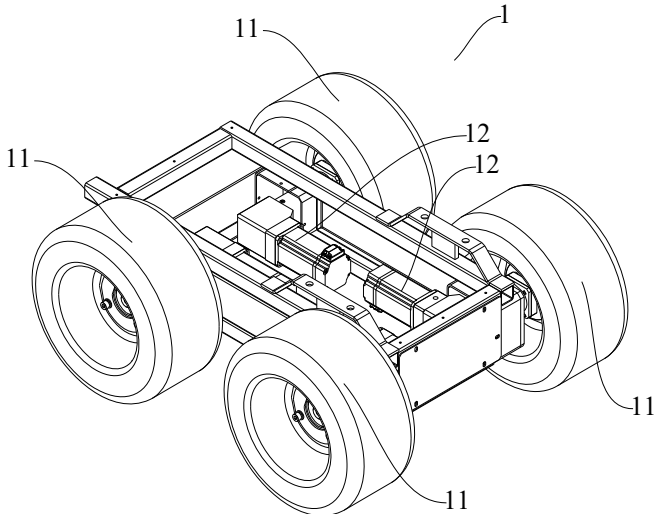
1
11
12
12
11
11
11

FIG. 3

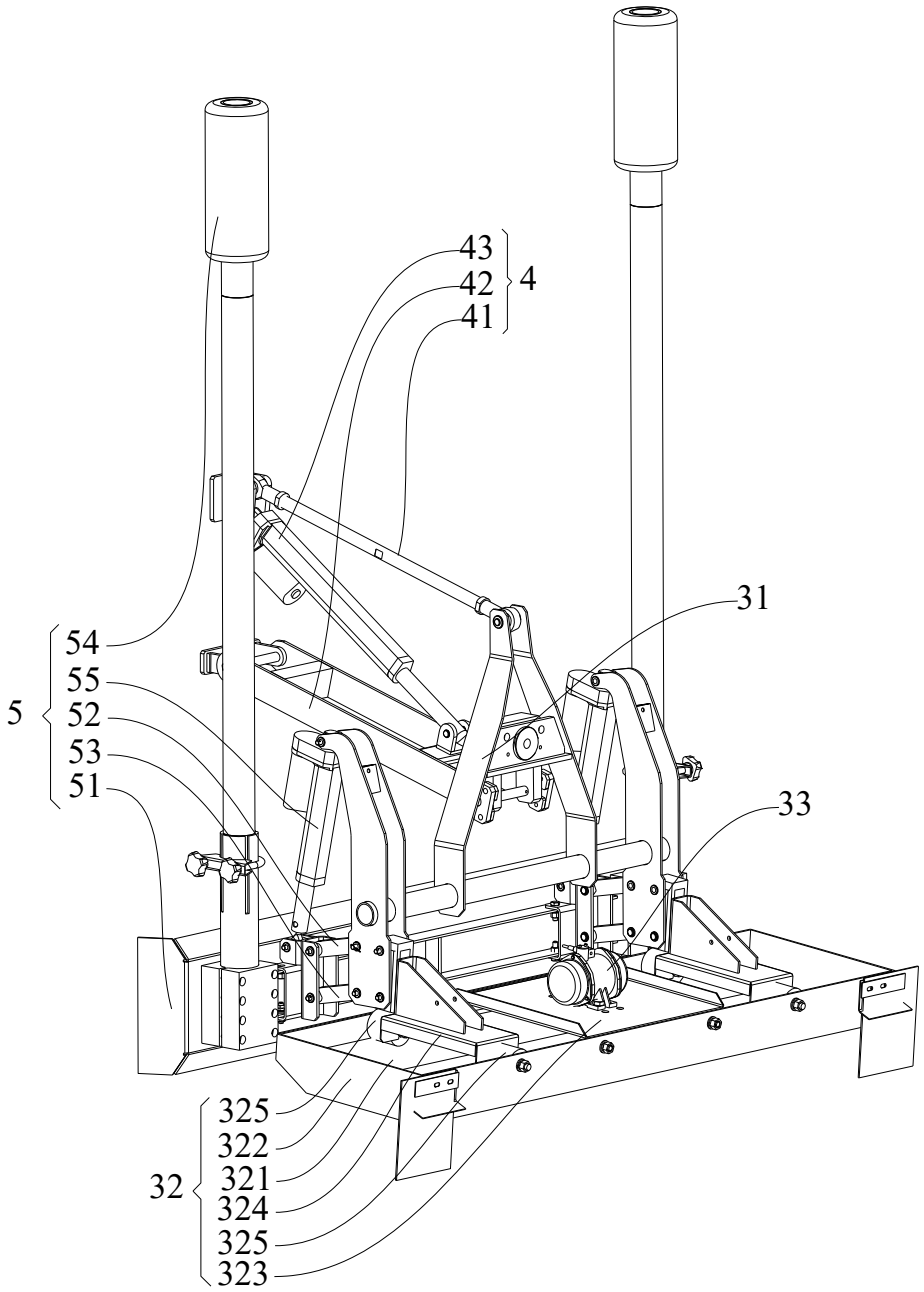

FIG. 4