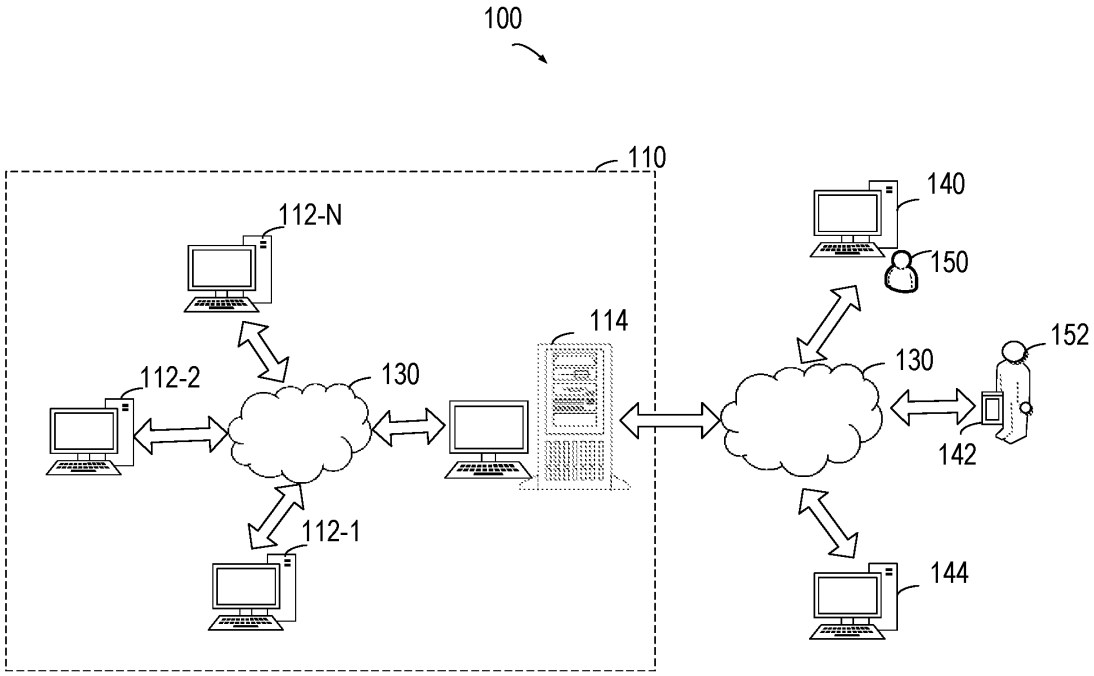

FIG.1

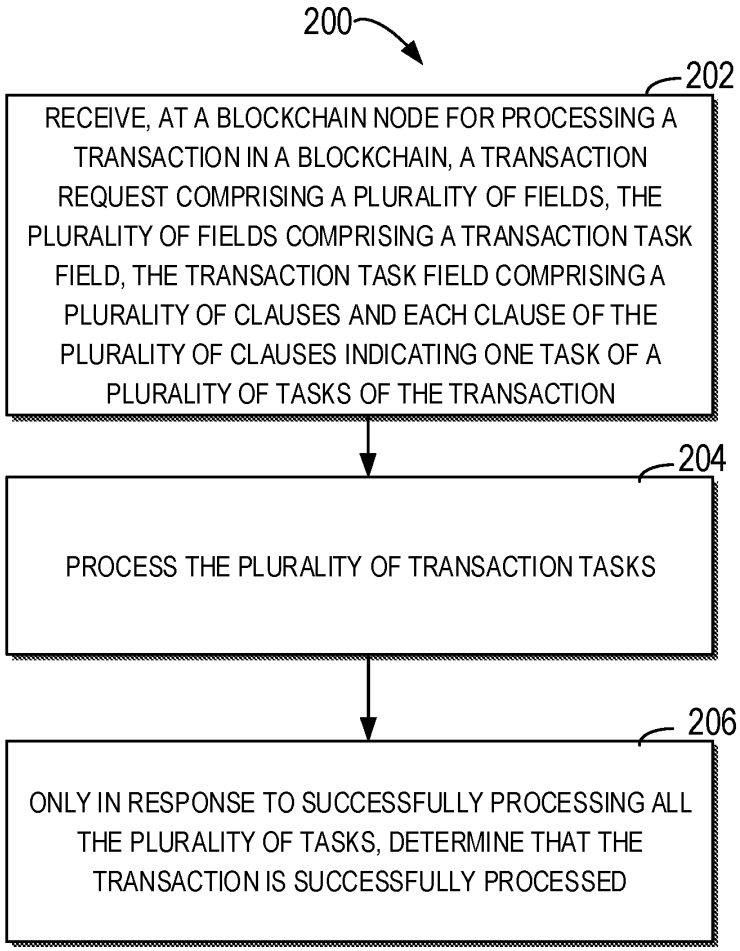
200
202
RECEIVE, AT A BLOCKCHAIN NODE FOR PROCESSING A TRANSACTION IN A BLOCKCHAIN, A TRANSACTION REQUEST COMPRISING A PLURALITY OF FIELDS, THE PLURALITY OF FIELDS COMPRISING A TRANSACTION TASK FIELD, THE TRANSACTION TASK FIELD COMPRISING A PLURALITY OF CLAUSES AND EACH CLAUSE OF THE PLURALITY OF CLAUSES INDICATING ONE TASK OF A PLURALITY OF TASKS OF THE TRANSACTION
204
PROCESS THE PLURALITY OF TRANSACTION TASKS
206
ONLY IN RESPONSE TO SUCCESSFULLY PROCESSING ALL THE PLURALITY OF TASKS, DETERMINE THAT THE TRANSACTION IS SUCCESSFULLY PROCESSED

FIG.2

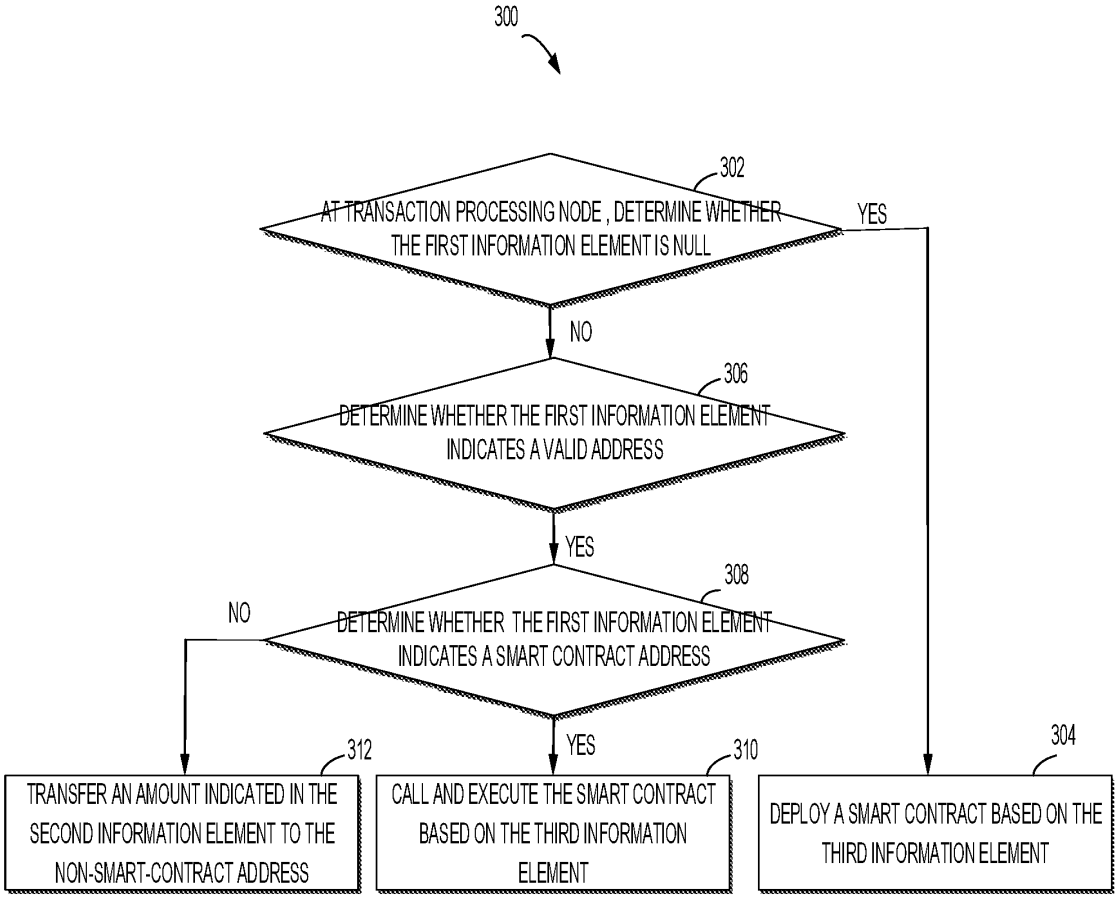
300
302
AT TRANSACTION PROCESSING NODE , DETERMINE WHETHER THE FIRST INFORMATION ELEMENT IS NULL
YES
NO
306
DETERMINE WHETHER THE FIRST INFORMATION ELEMENT INDICATES A VALID ADDRESS
YES
308
NO
DETERMINE WHETHER THE FIRST INFORMATION ELEMENT INDICATES A SMART CONTRACT ADDRESS
YES
312
310
304
TRANSFER AN AMOUNT INDICATED IN THE SECOND INFORMATION ELEMENT TO THE NON-SMART-CONTRACT ADDRESS
CALL AND EXECUTE THE SMART CONTRACT BASED ON THE THIRD INFORMATION ELEMENT
DEPLOY A SMART CONTRACT BASED ON THE THIRD INFORMATION ELEMENT

FIG.3

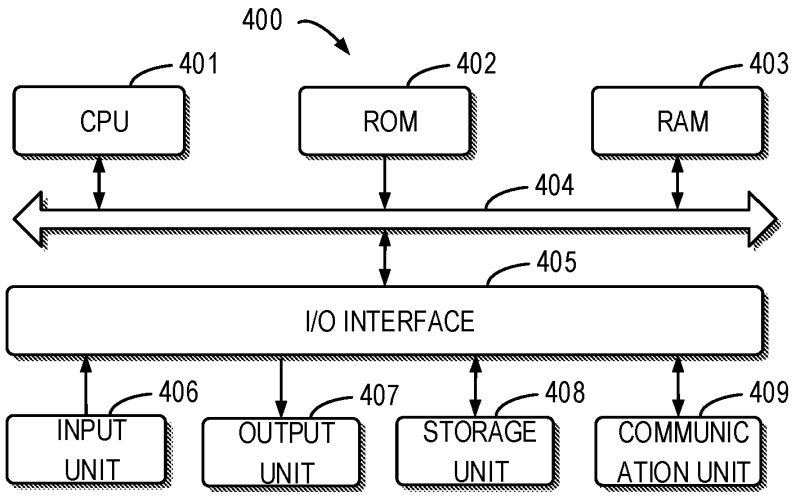
400
401
CPU
402
ROM
403
RAM
404
405
I/O INTERFACE
406
INPUT UNIT
407
OUTPUT UNIT
408
STORAGE UNIT
409
COMMUNIC ATION UNIT

FIG. 4