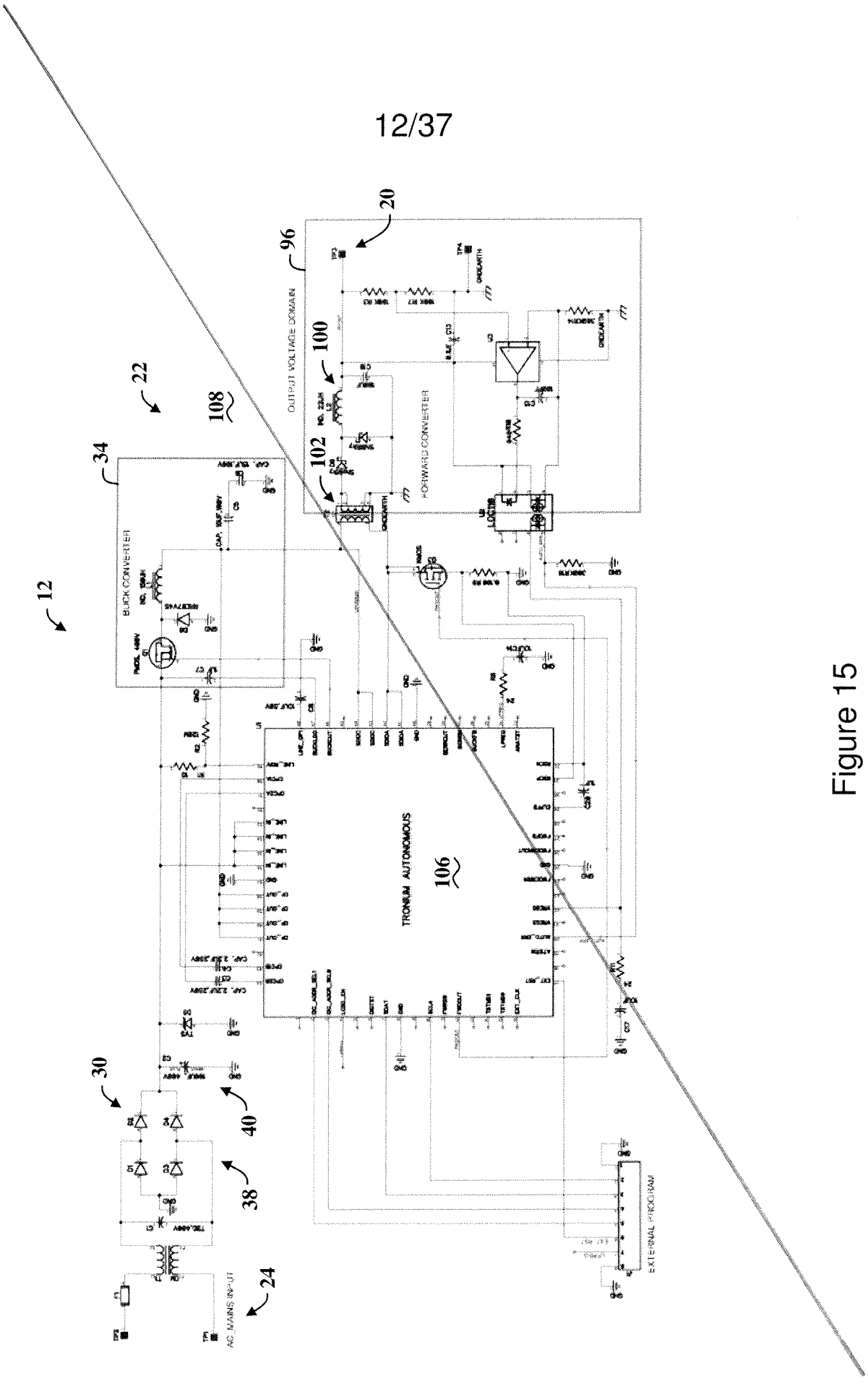
12
20
22
24
30
34
38
40
96
100
102
106
108
OUTPUT VOLTAGE DOMAIN
FORWARD CONVERTER
BUCK CONVERTER
TRONRUM AUTONOMOUS
AC_MAINS_IN/+LIT
EXTERNAL PROGRAM

Figure 15

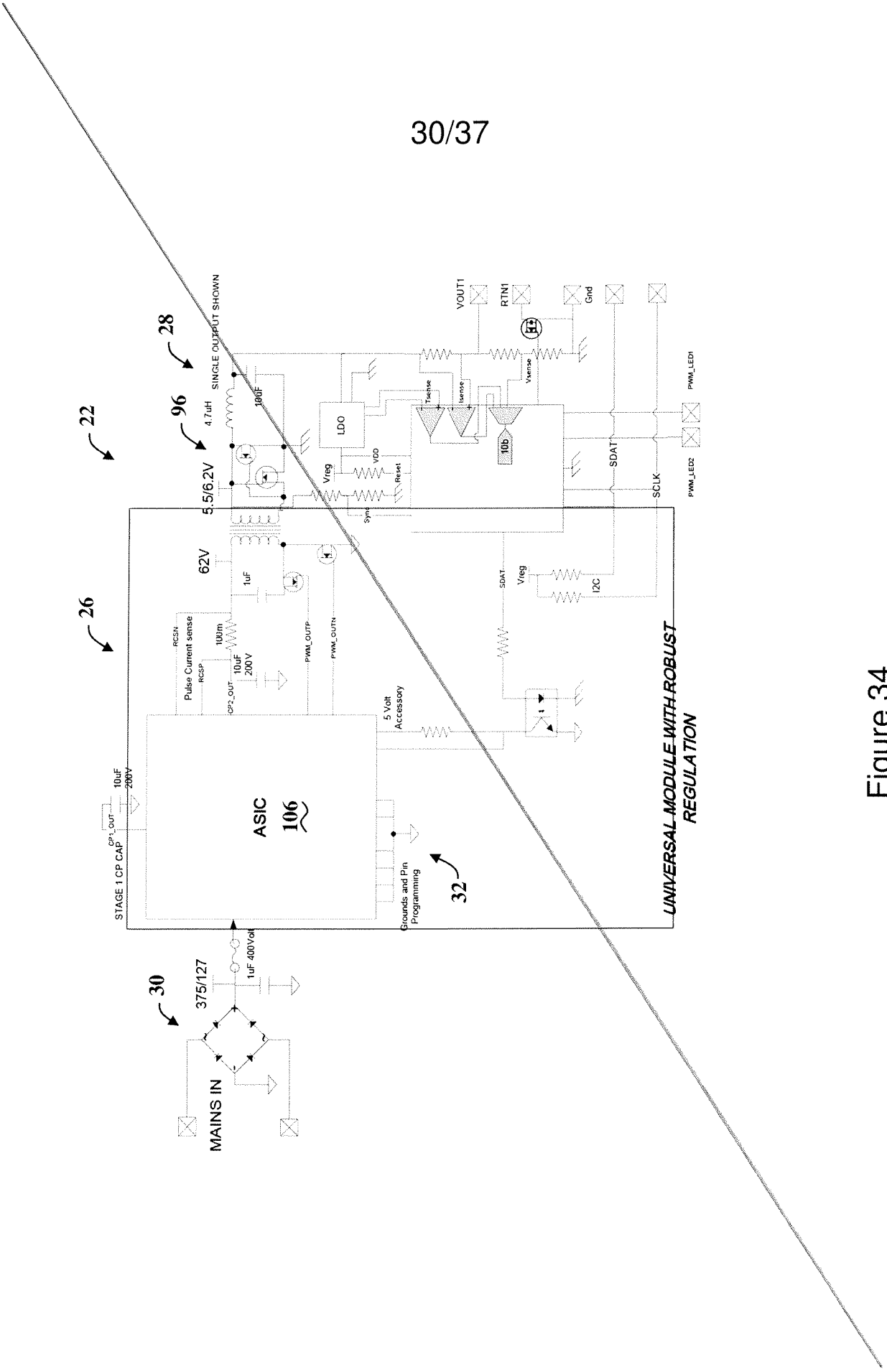
22
26
28
96
30
32
MAINS IN
375/127
1uF 400Volt
STAGE 1 CP CAP
CP1_OUT
10uF
200V
ASIC
106
Grounds and Pin Programming
5 Volt Accessory
Pulse Current sense
RCSN
RCSP
CP2_OUT
100m
10uF
200V
1uF
62V
5.5/6.2V
4.7uH
100F
SINGLE OUTPUT SHOWN
LDO
VDD
Vreg
Reset
Sync
Tsense
Isense
Vsense
10b
VOUT1
RTN1
Gnd
SDAT
SCLK
PWM_LED1
PWM_LED2
I2C
PWM_OUTP
PWM_OUTN
UNIVERSAL MODULE WITH ROBUST REGULATION

Figure 34

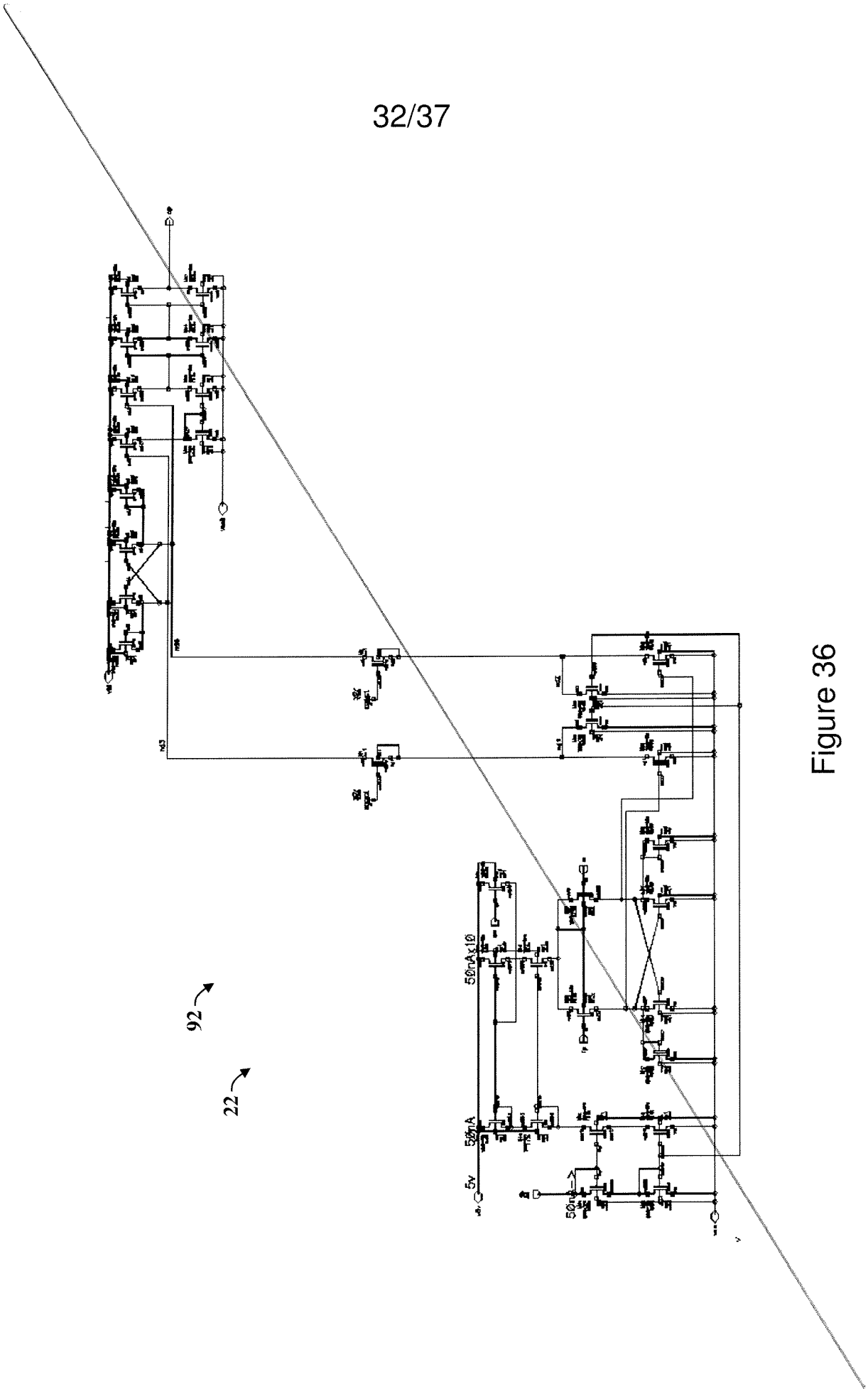

Figure 36

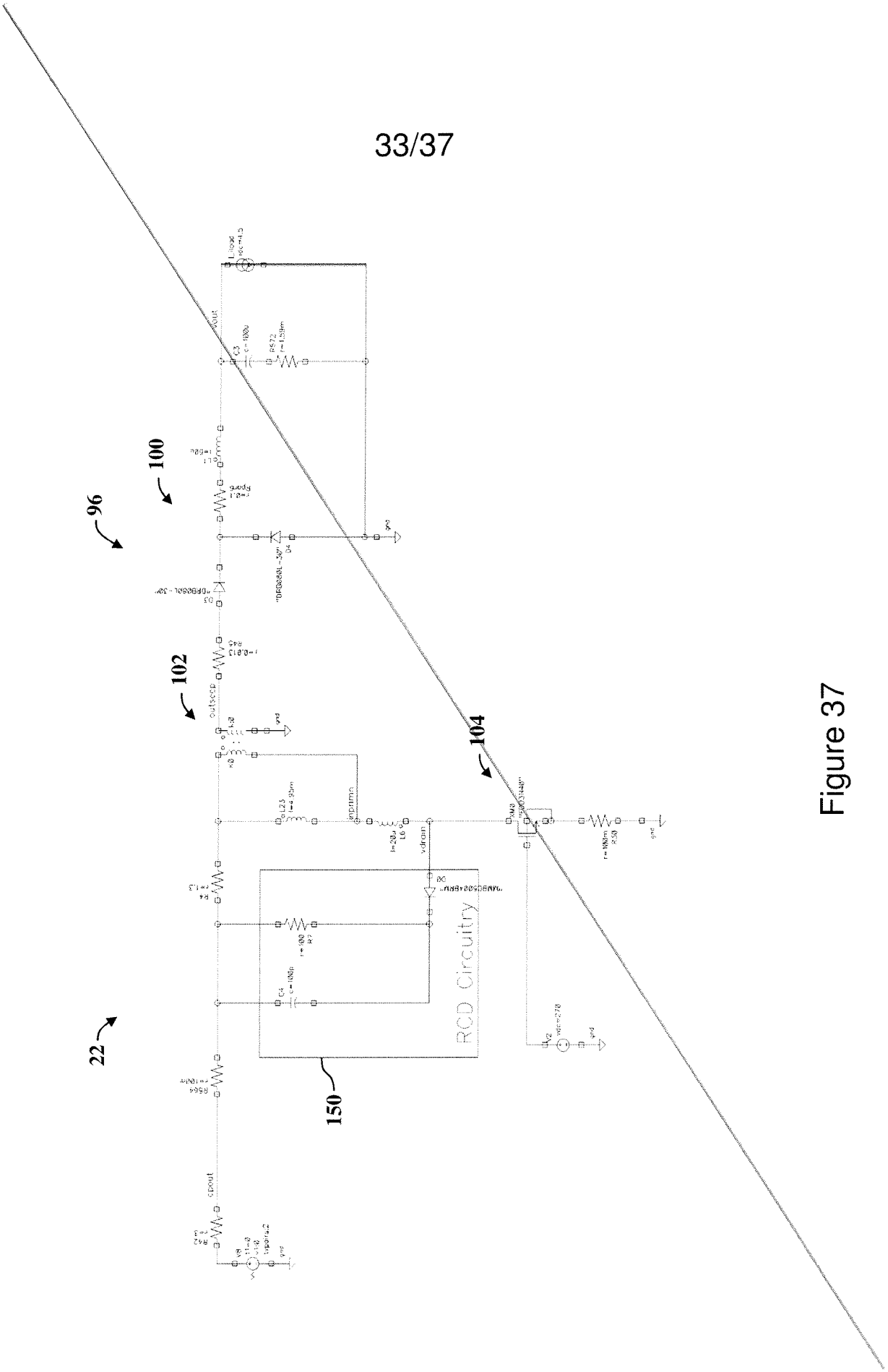

Figure 37

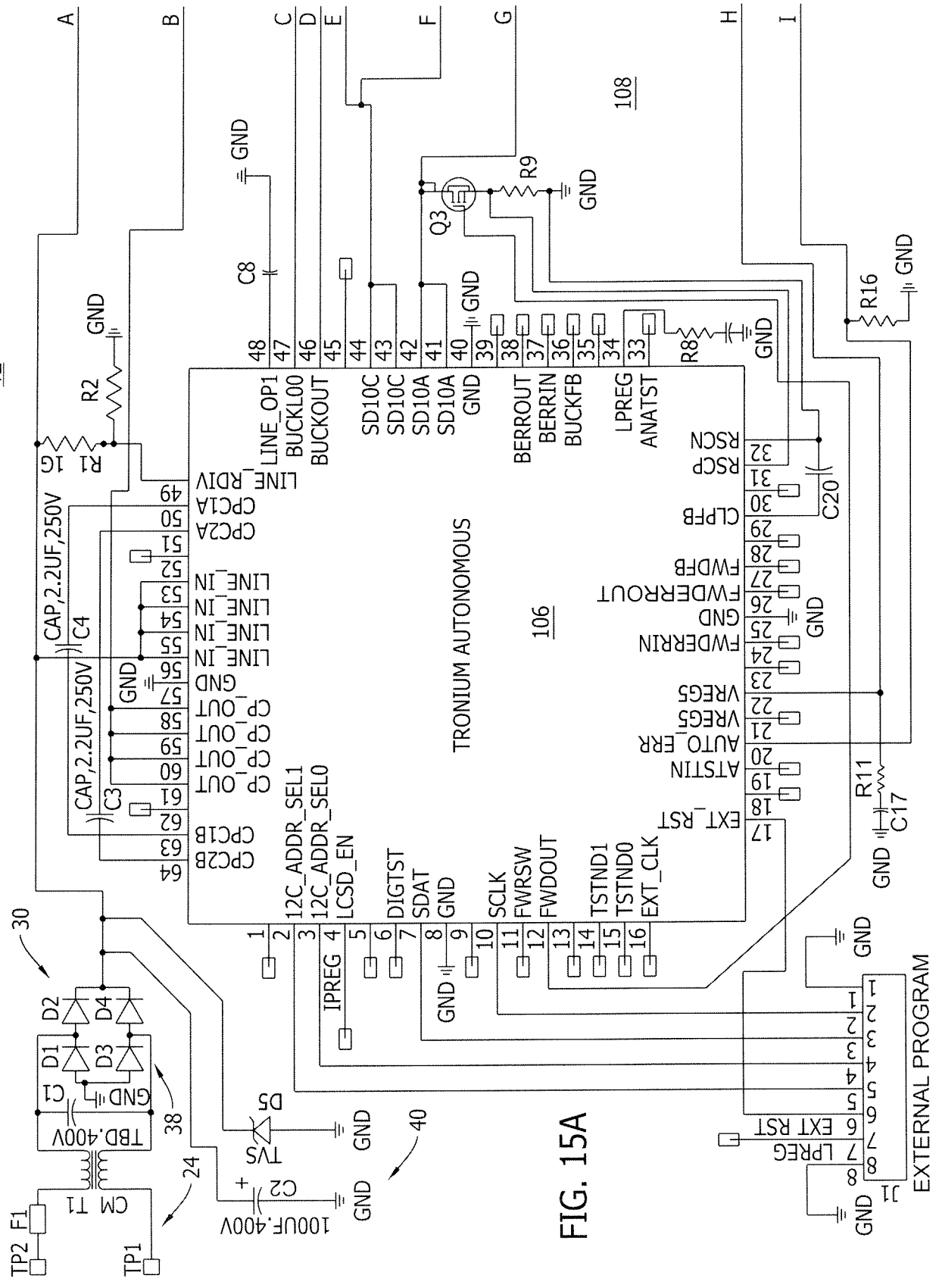
12
TRONIUM AUTONOMOUS
106
108
EXTERNAL PROGRAM
J1
TP1
TP2
F1
CM T1
TBD,400V
C1
D1
D2
D3
D4
30
38
24
40
TVS
D5
C2
100UF,400V
C3
CAP,2.2UF,250V
C4
CAP,2.2UF,250V
R1
1G
R2
C8
R9
Q3
R8
R16
C20
R11
C17
GND
LINE_RDIV
CPC1A
CPC2A
LINE_IN
GND
CP_OUT
CPC1B
CPC2B
12C_ADDR_SEL1
12C_ADDR_SEL0
LCSD_EN
IPREG
DIGTST
SDAT
SCLK
FWRSW
FWDOUT
TSTND1
TSTND0
EXT_CLK
EXT_RST
ATSTIN
AUTO_ERR
VREG5
FWDERRIN
FWDERROUT
FWDFB
CLPFB
RSCP
RSCN
LINE_OP1
BUCKL00
BUCKOUT
SD10C
SD10A
BERROUT
BERRIN
BUCKFB
LPREG
ANATST
LPREG
EXT RST

FIG. 15A

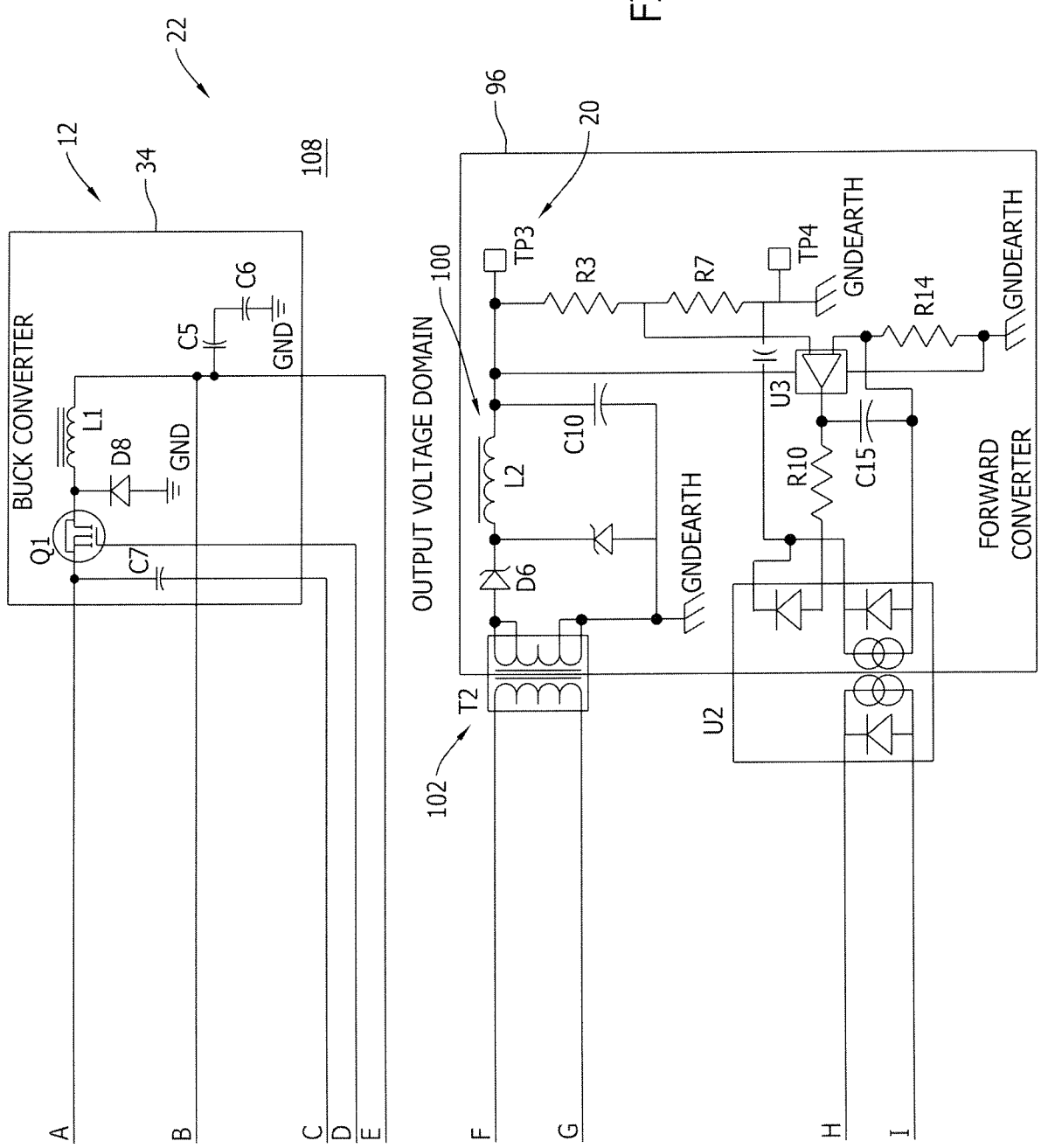
22
12
34
108
BUCK CONVERTER
L1
D8
GND
Q1
C7
C5
C6
GND
A
B
C
D
E
96
20
100
OUTPUT VOLTAGE DOMAIN
TP3
R3
R7
TP4
GNDEARTH
R14
GNDEARTH
U3
C10
L2
D6
GNDEARTH
R10
C15
FORWARD CONVERTER
T2
102
U2
F
G
H
I

FIG. 15B

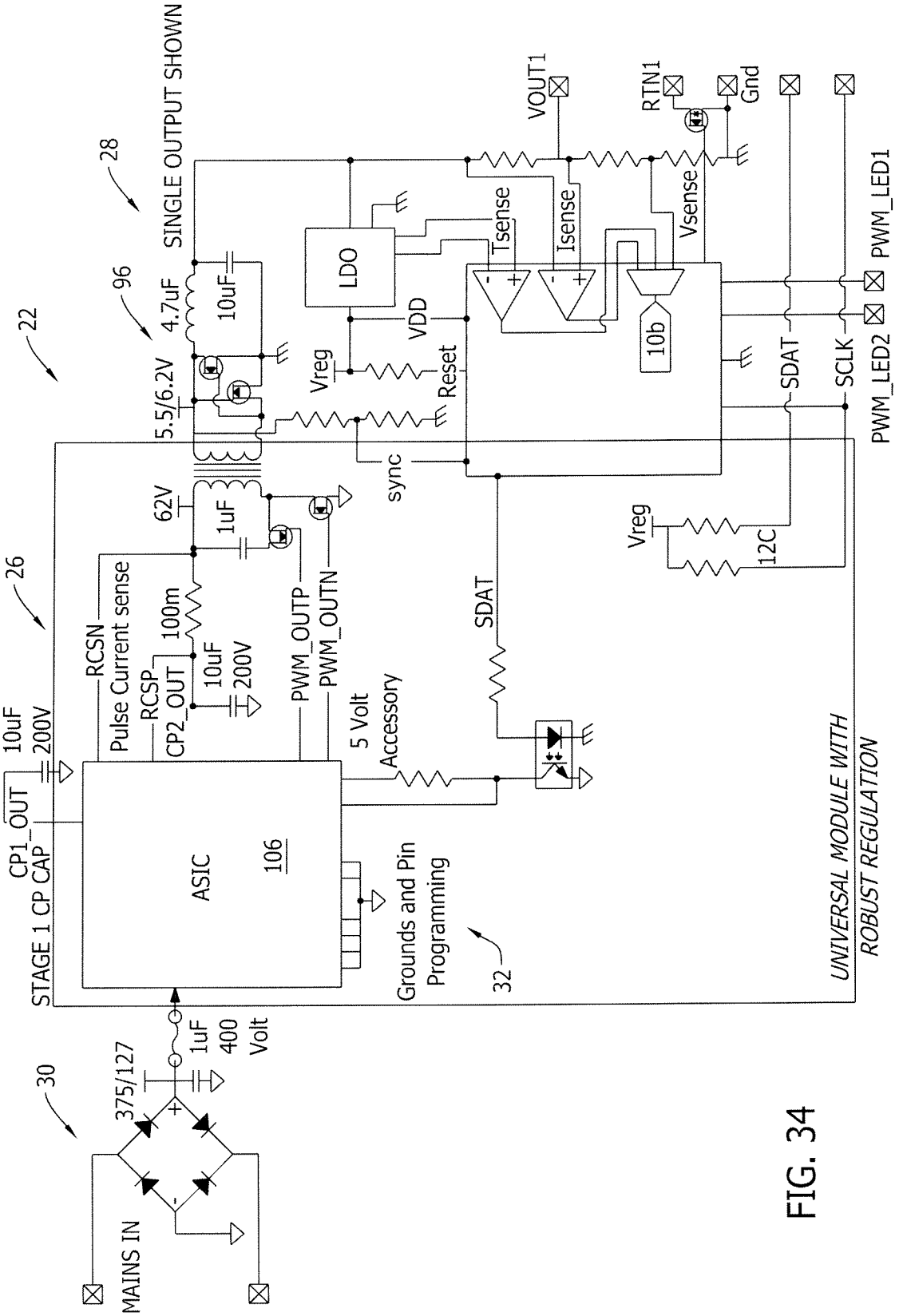
UNIVERSAL MODULE WITH
ROBUST REGULATION
SINGLE OUTPUT SHOWN
28
22
96
26
30
32
106
ASIC
MAINS IN
375/127
1uF
400
Volt
STAGE 1 CP CAP
CP1_OUT
10uF
200V
Pulse Current sense
RCSN
RCSP
CP2_OUT
100m
10uF
200V
62V
1uF
PWM_OUTP
PWM_OUTN
5 Volt
Accessory
Grounds and Pin
Programming
SDAT
sync
5.5/6.2V
4.7uF
10uF
Vreg
VDD
Reset
LDO
Tsense
Isense
Vsense
10b
VOUT1
RTN1
Gnd
SDAT
SCLK
PWM_LED1
PWM_LED2
Vreg
12C

FIG. 34

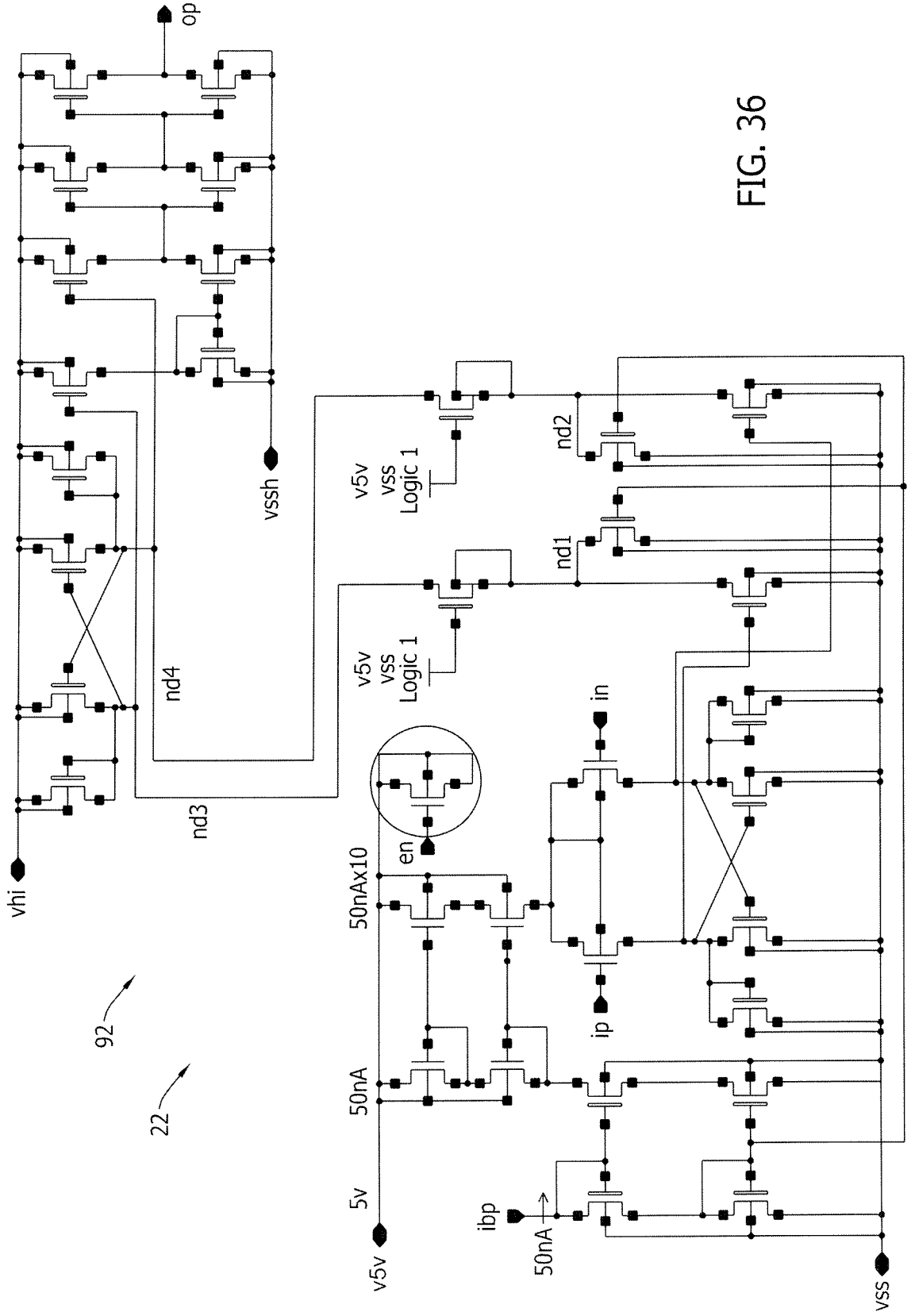
op
vssh
vhi
nd4
nd3
nd2
nd1
v5v
vss
Logic 1
v5v
vss
Logic 1
in
en
50nAx10
ip
50nA
5v
v5v
ibp
50nA
vss
92
22

FIG. 36

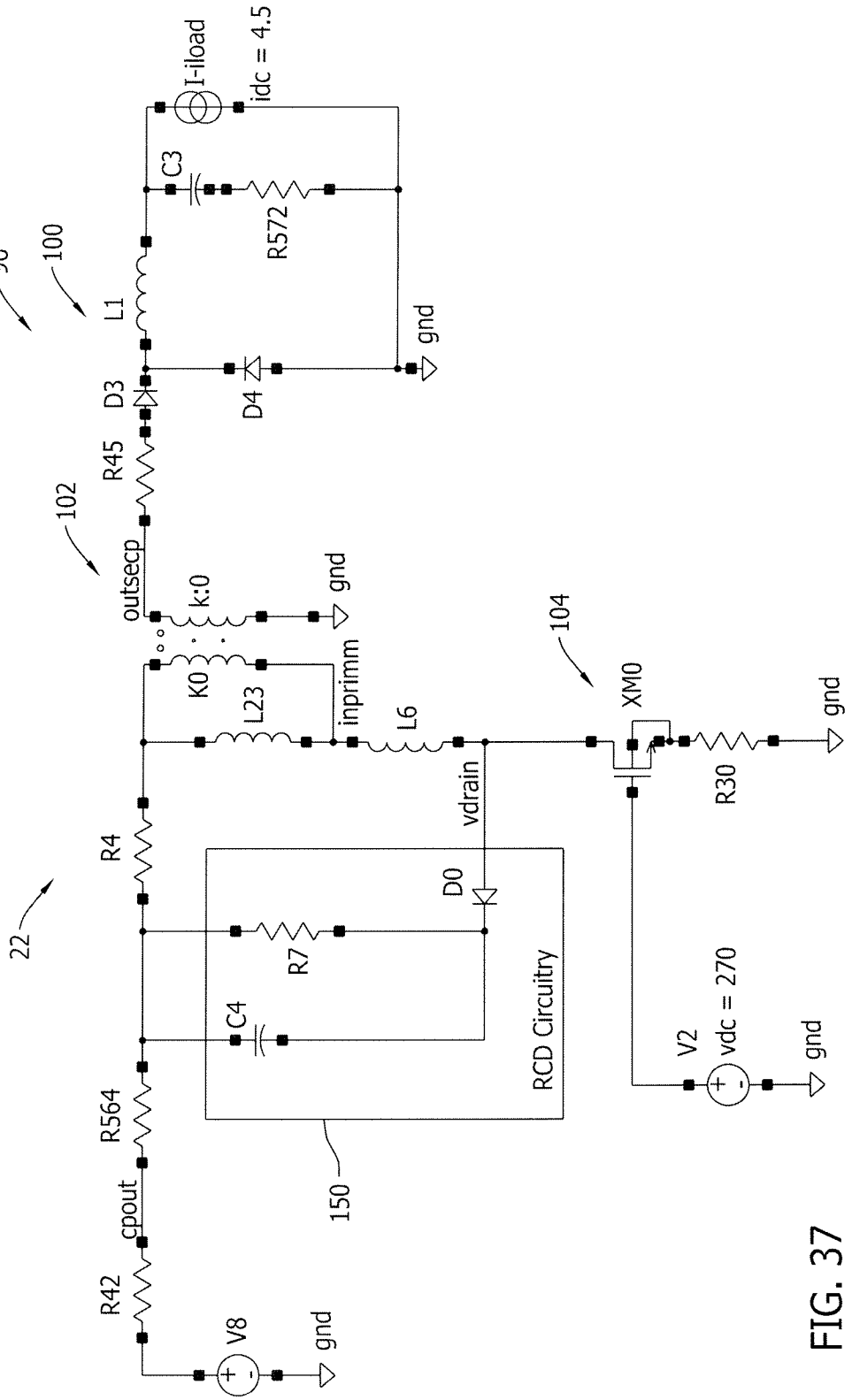
96
100
L1
C3
R572
I-iload
idc = 4.5
gnd
D3
D4
R45
102
outsecp
k:0
gnd
K0
L23
inprimm
L6
104
XM0
gnd
R30
vdrain
22
R4
D0
R7
C4
RCD Circuitry
V2
vdc = 270
gnd
R564
cpout
150
R42
V8
gnd

FIG. 37