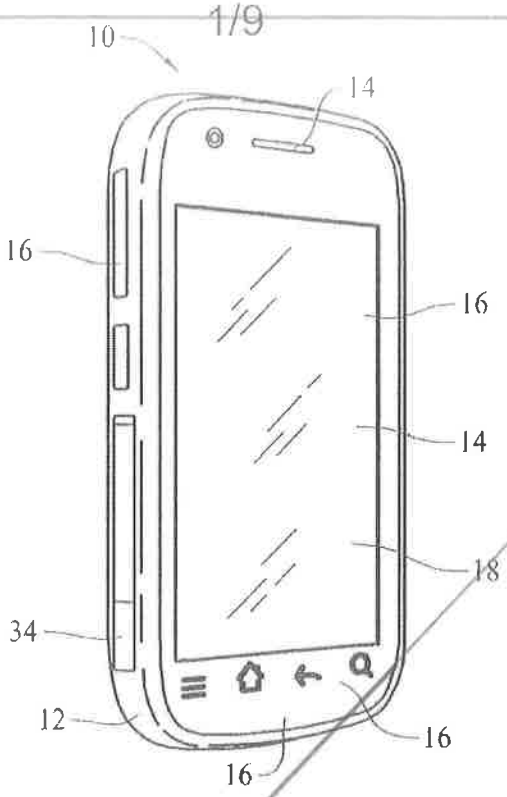

FIG. 1

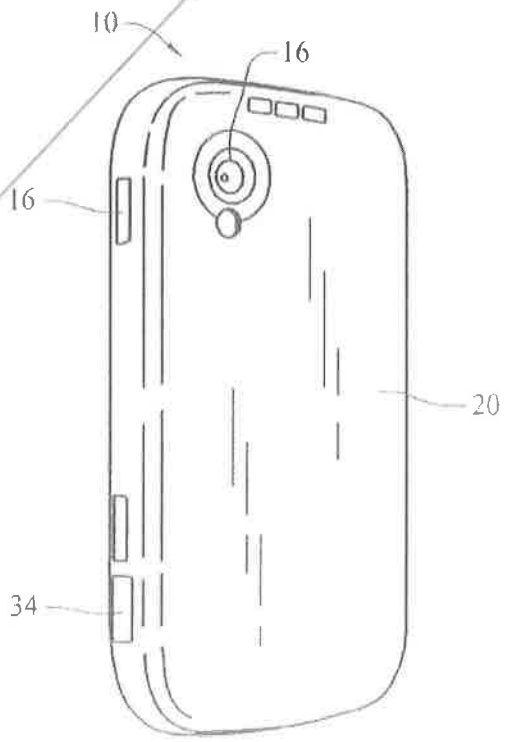

FIG. 2

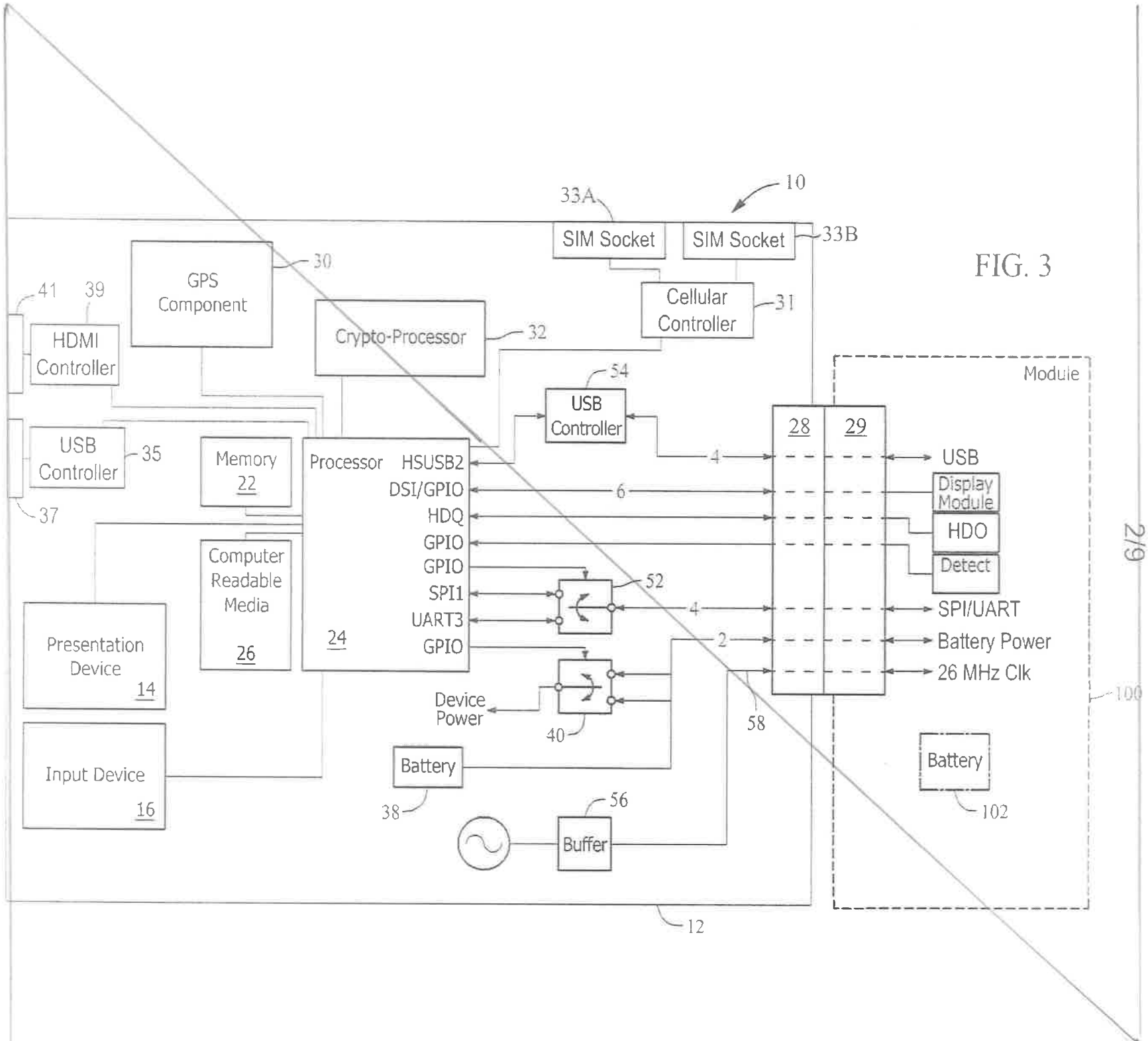
10
33A
SIM Socket
SIM Socket
33B
GPS Component
30
41
39
HDMI Controller
Crypto-Processor
32
Cellular Controller
31
54
USB Controller
USB Controller
35
37
Memory 22
Processor
HSUSB2
DSI/GPIO
HDQ
GPIO
GPIO
SPI1
UART3
GPIO
24
Computer Readable Media 26
Presentation Device 14
Input Device 16
Device Power
Battery
38
40
52
56
Buffer
58
12
Module
28
29
USB
Display Module
HDO
Detect
SPI/UART
Battery Power
26 MHz Clk
100
Battery
102
4
6
4
2

FIG. 3

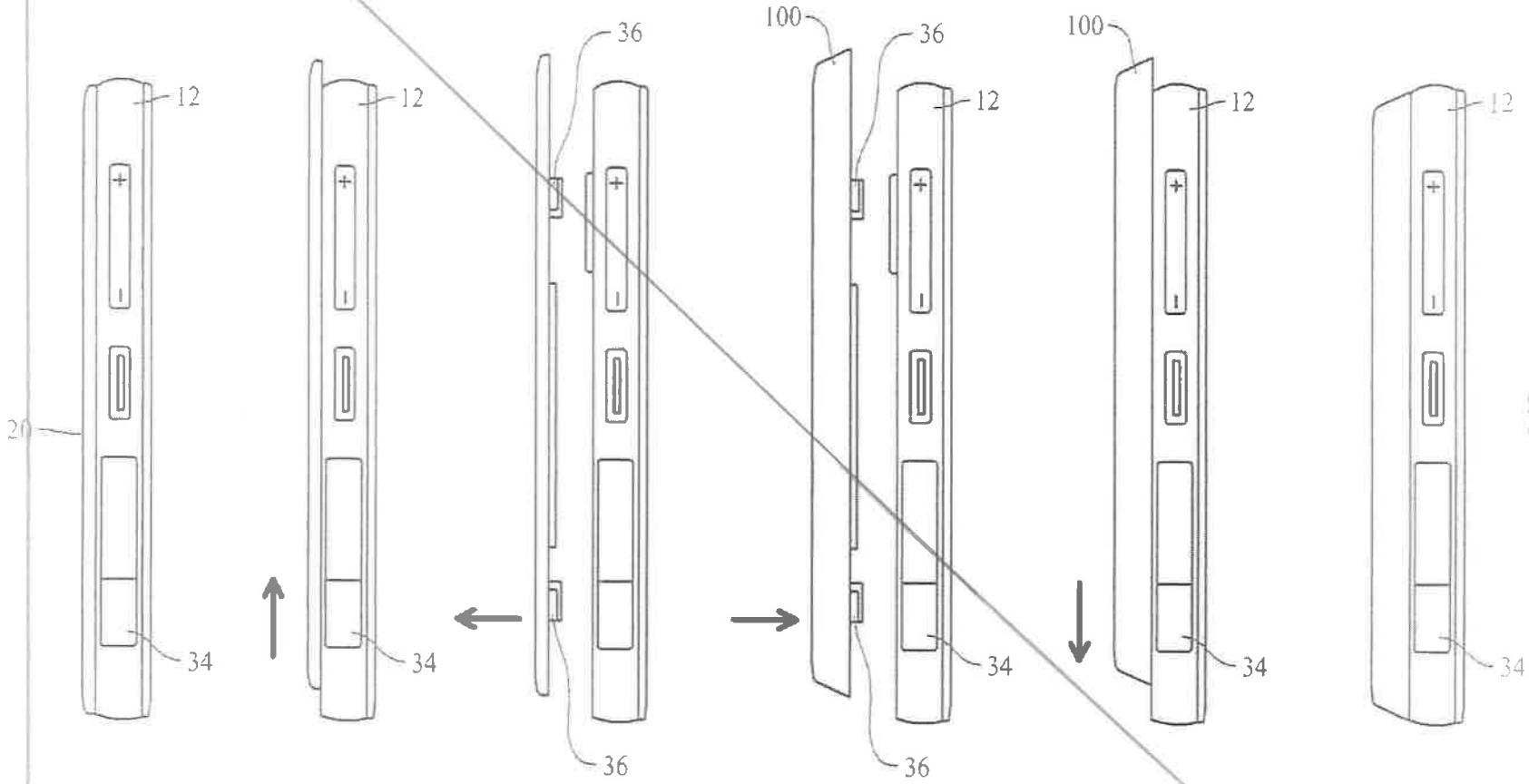

FIG. 4A FIG. 4B FIG. 4C FIG. 4D FIG. 4E FIG. 4F

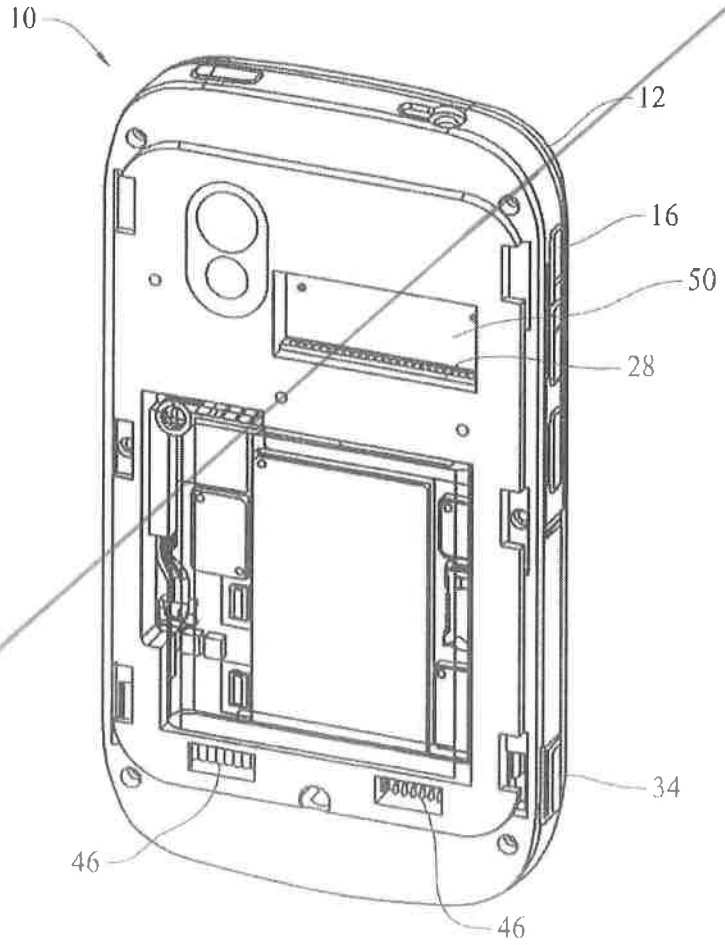

FIG. 5

FIG. 6

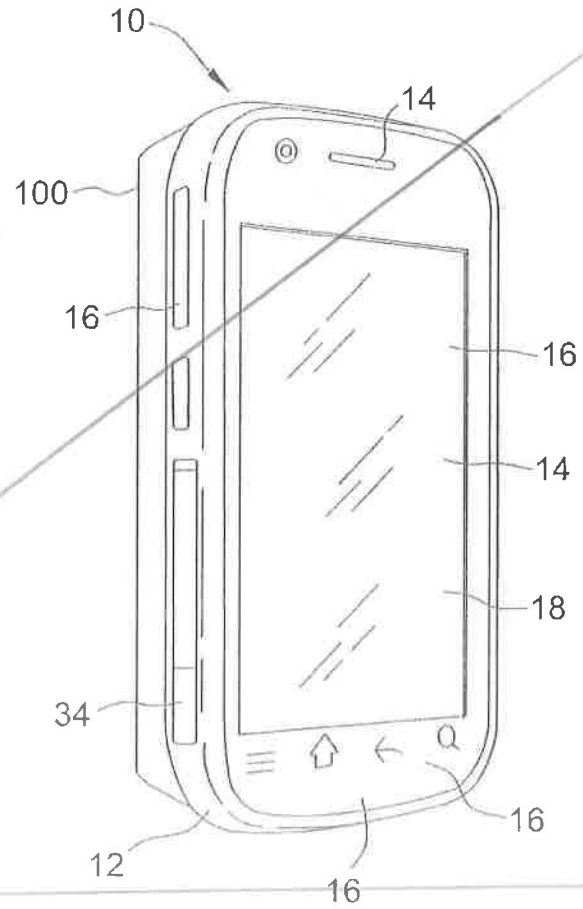

FIG. 7

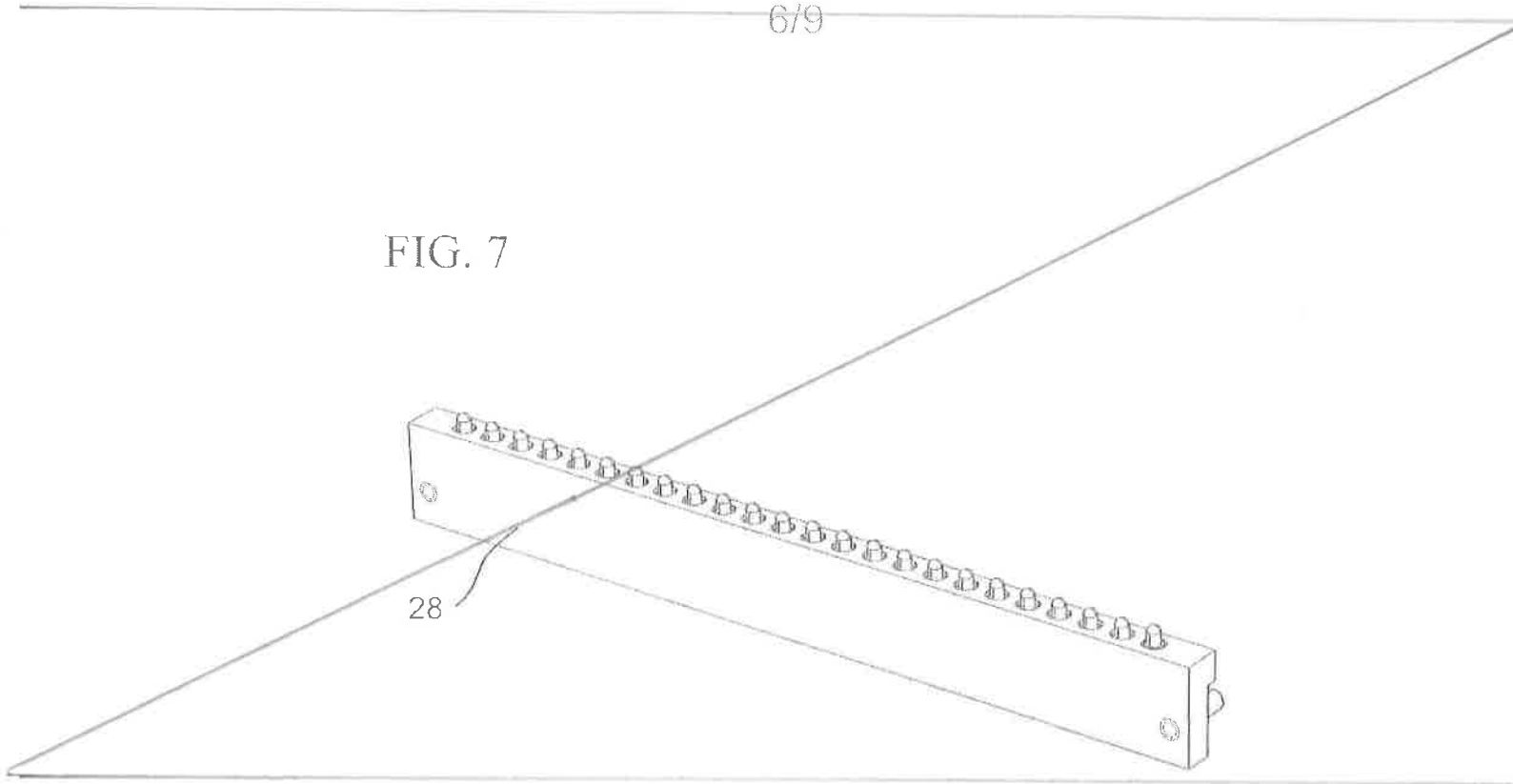

FIG. 8

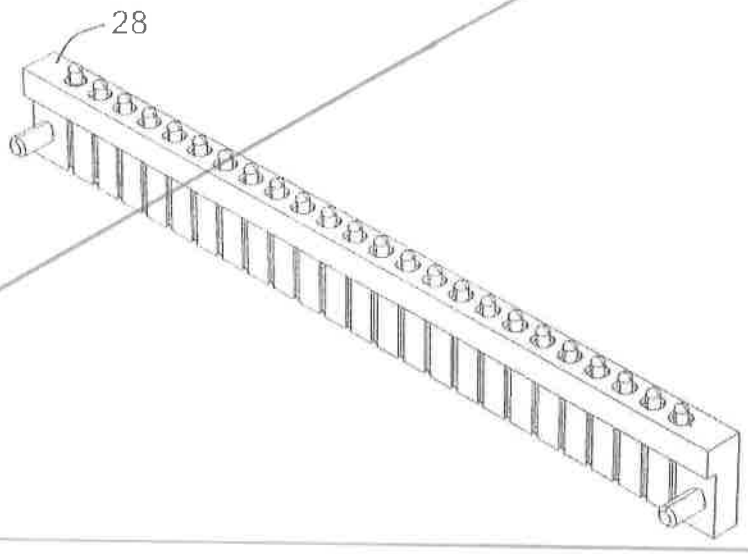

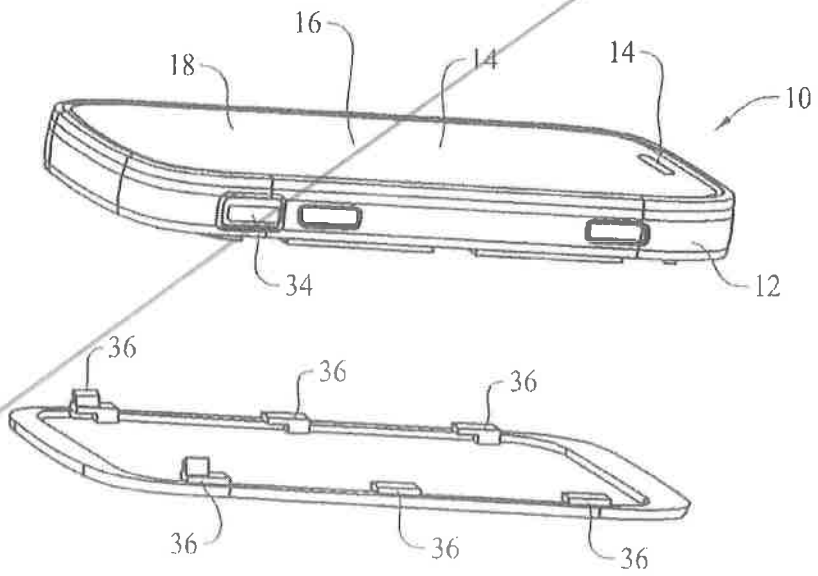

FIG. 9

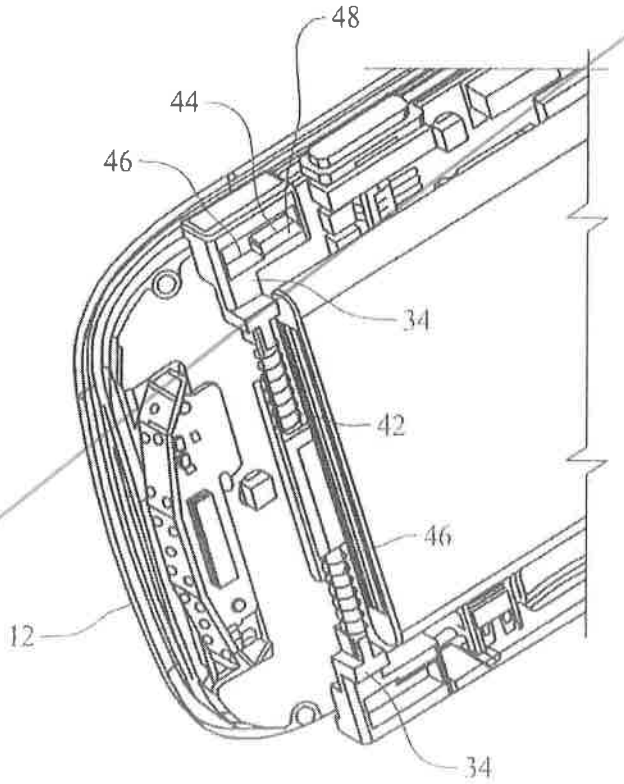

FIG. 10

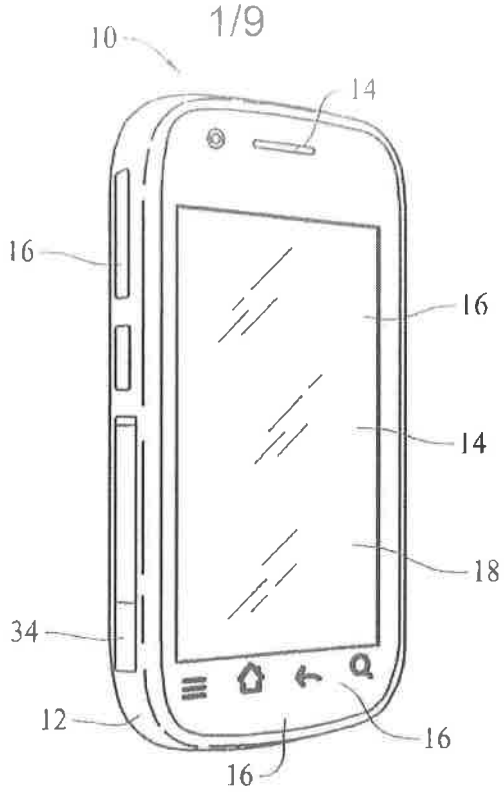

FIG. 1

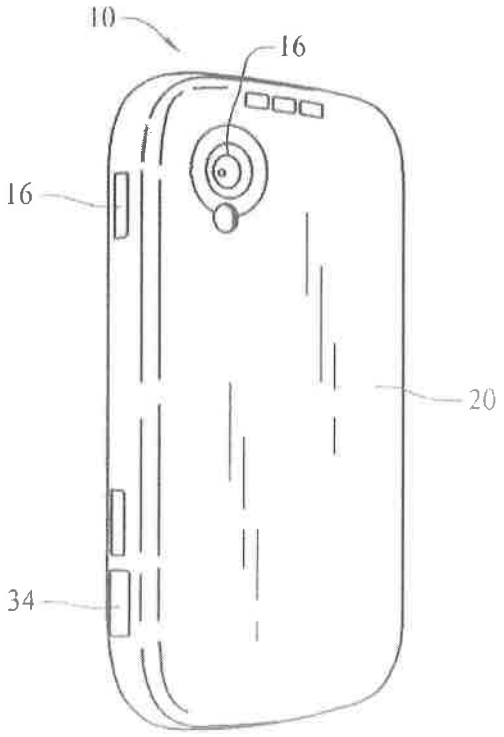

FIG. 2

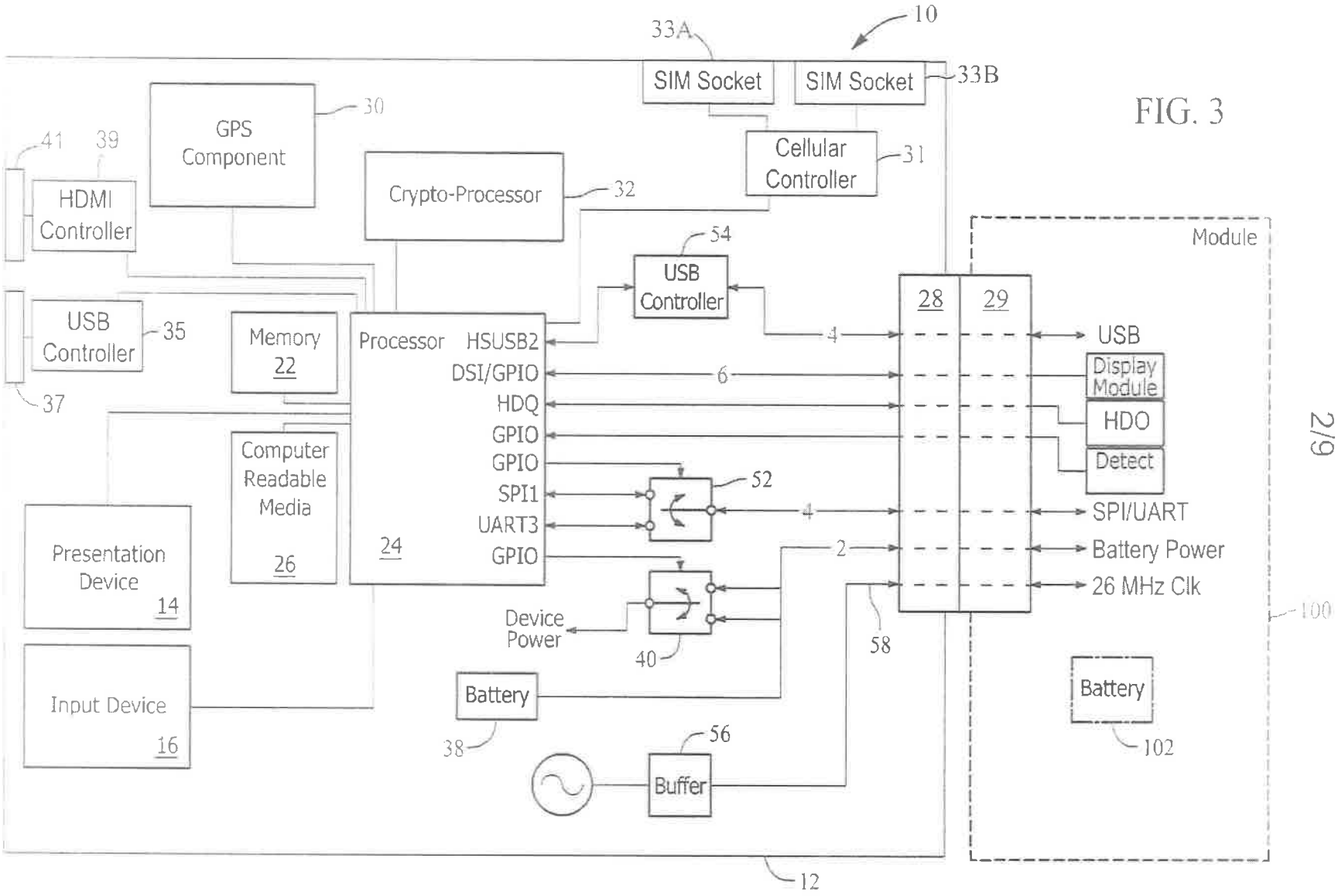
10
33A
SIM Socket
SIM Socket
33B
GPS Component
30
Cellular Controller
31
41
39
HDMI Controller
Crypto-Processor
32
54
USB Controller
Module
USB Controller
35
Memory 22
Processor
HSUSB2
DSI/GPIO
HDQ
GPIO
GPIO
SPI1
UART3
GPIO
24
28
29
4
6
USB
Display Module
HDO
Detect
37
Computer Readable Media
26
52
4
SPI/UART
Battery Power
26 MHz Clk
2
Presentation Device
14
Device Power
40
58
100
Input Device
16
Battery
38
56
Buffer
Battery
102
12

FIG. 3

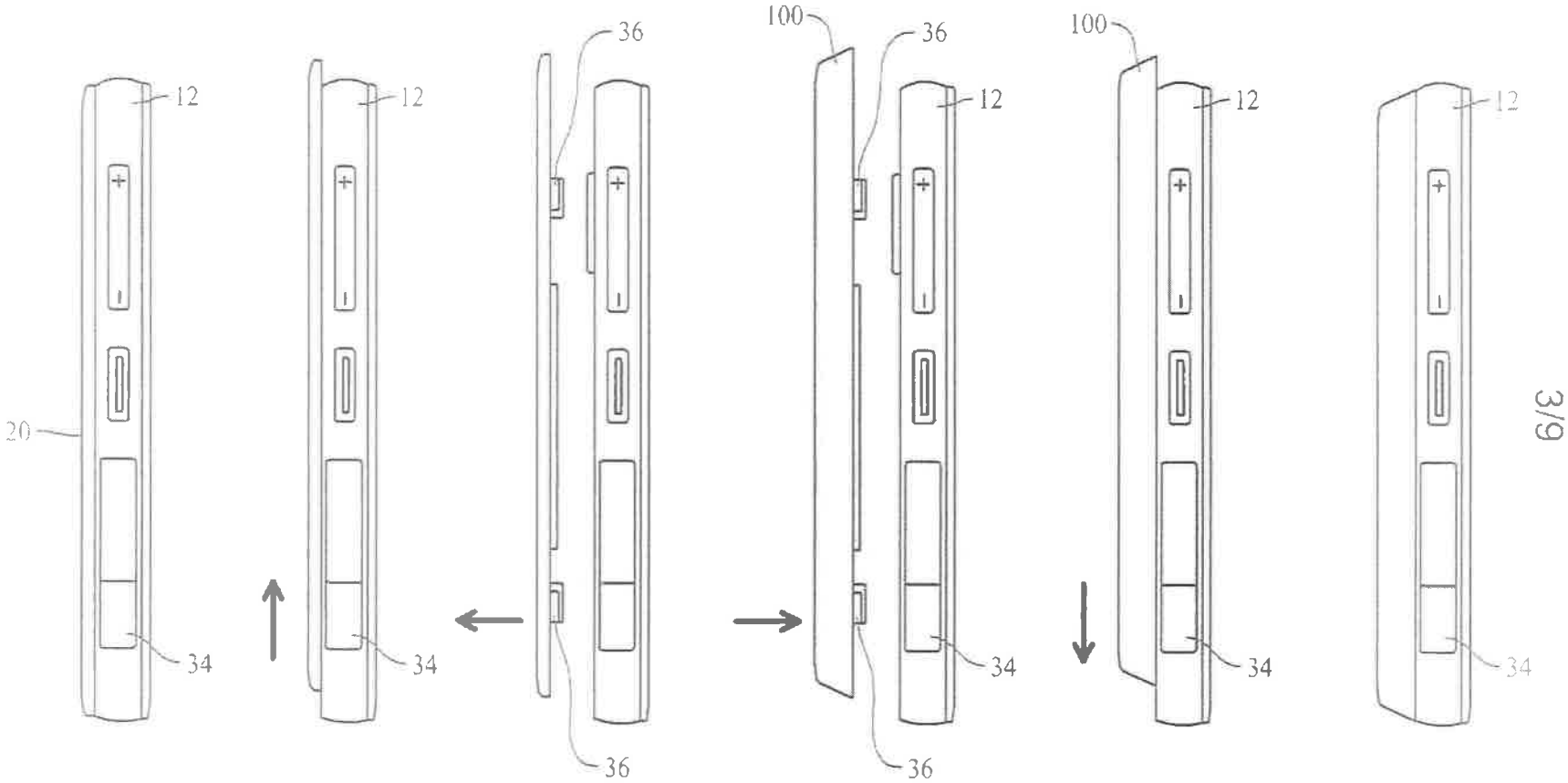

FIG. 4A FIG. 4B FIG. 4C FIG. 4D FIG. 4E FIG. 4F

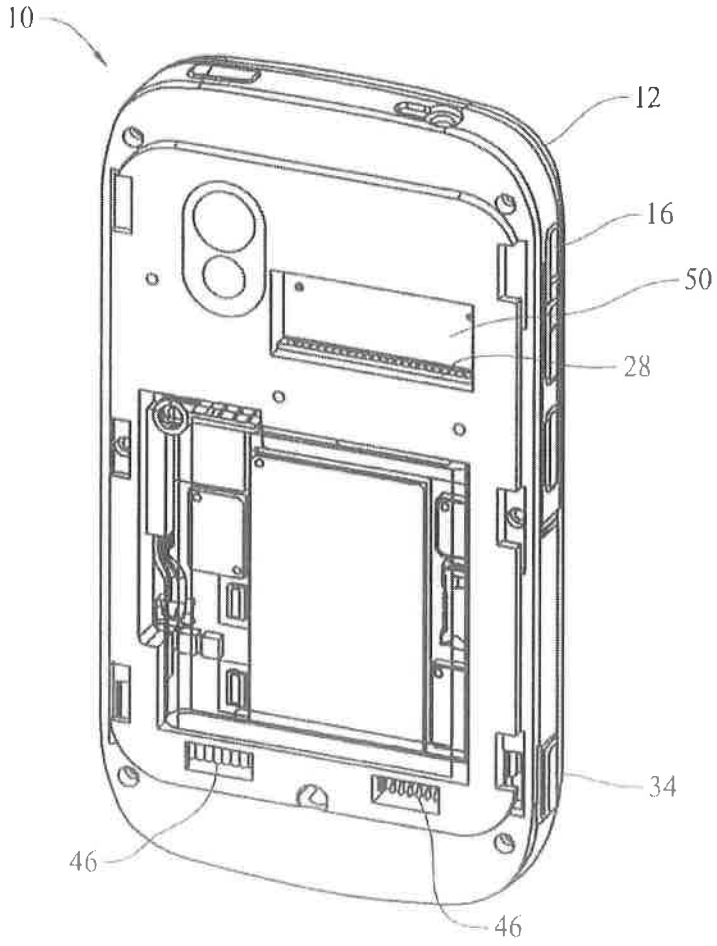

FIG. 5

FIG. 6

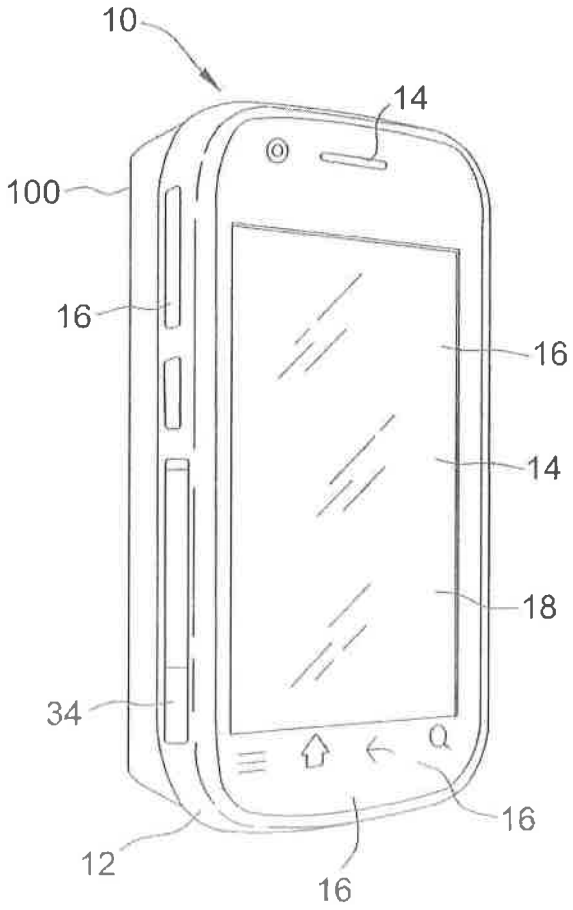

FIG. 7

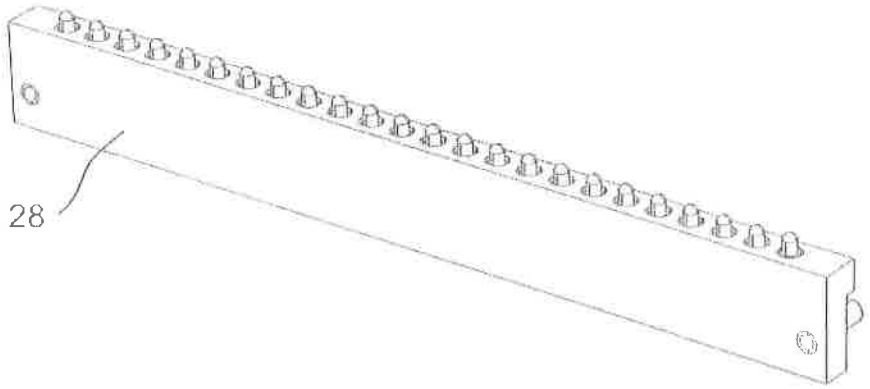

FIG. 8

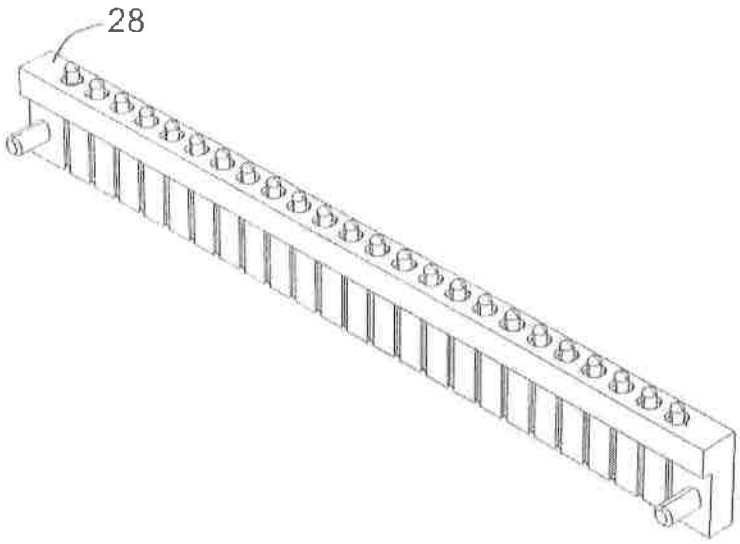

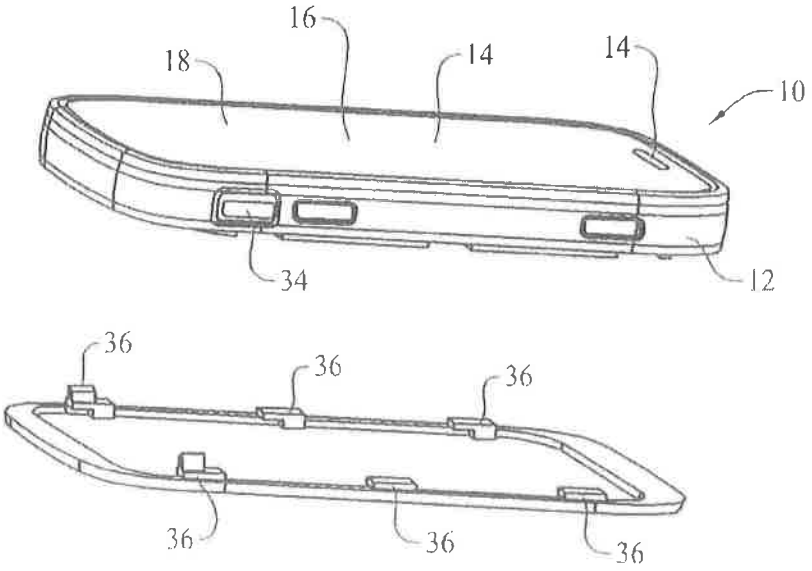

FIG. 9

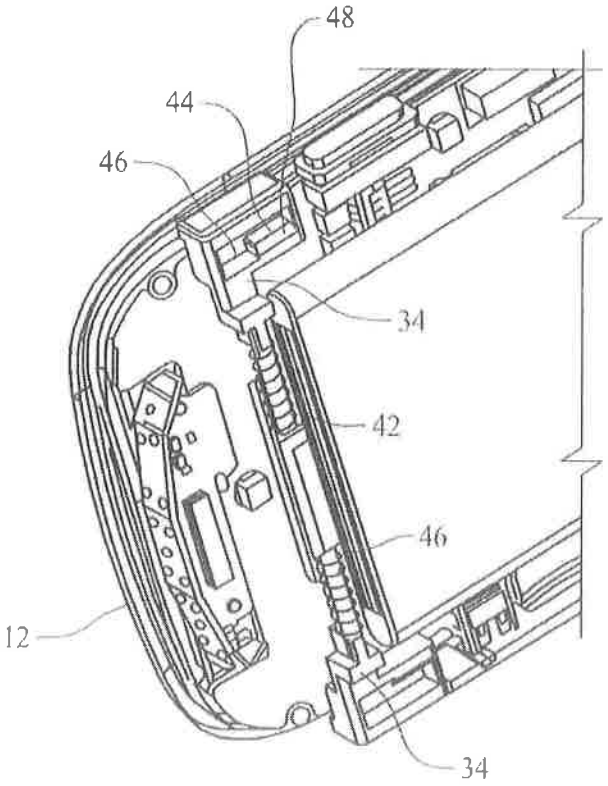

FIG. 10