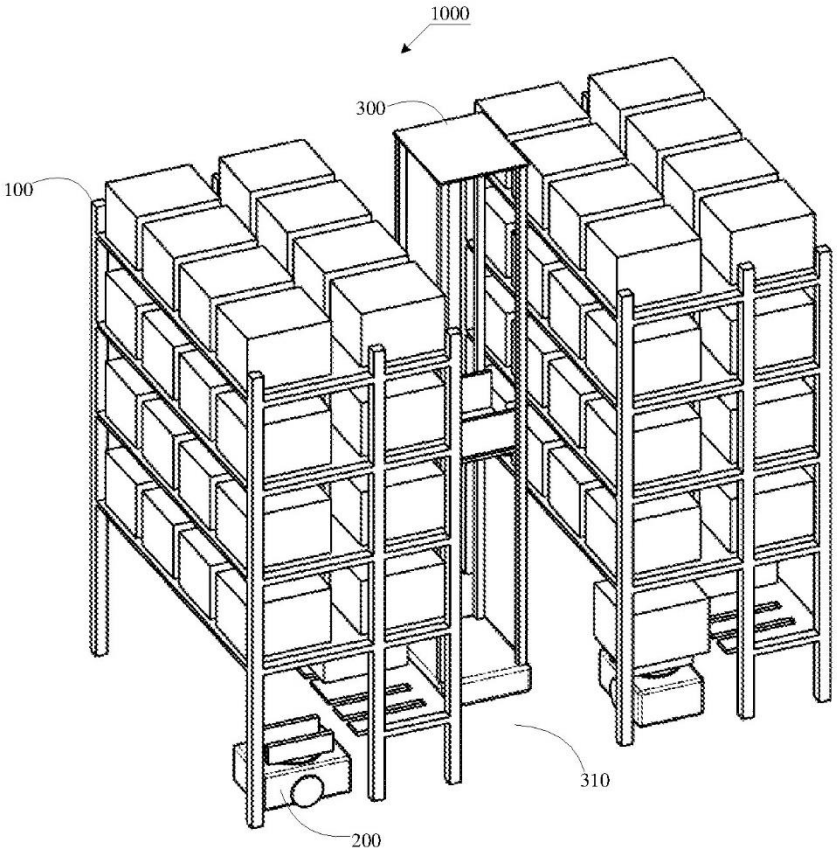

FIG. 1

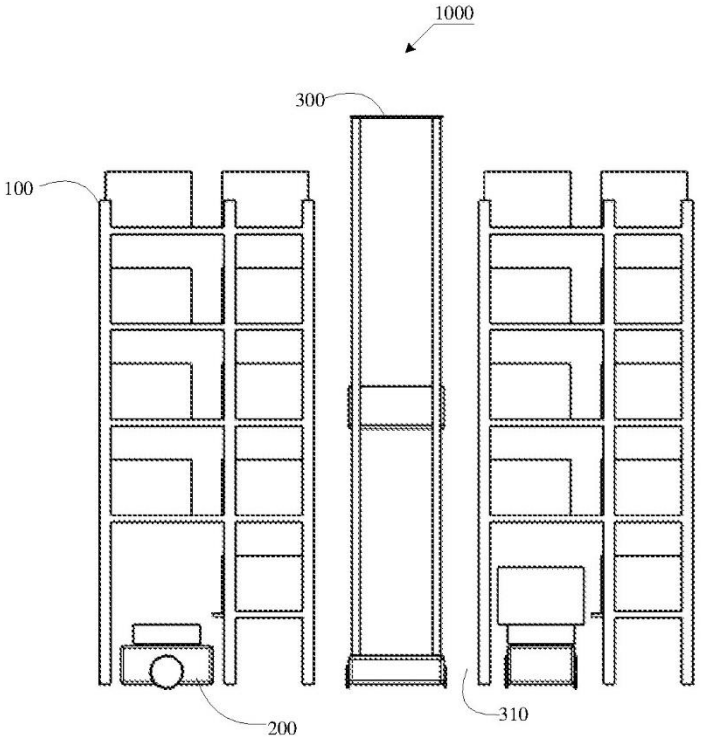

FIG. 2

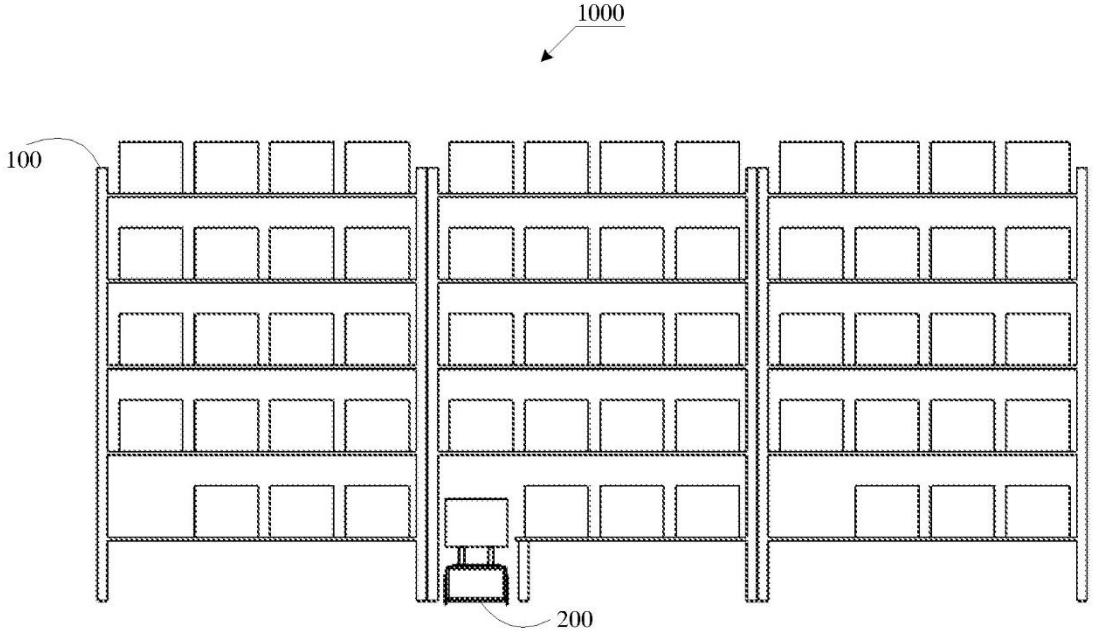

FIG. 3

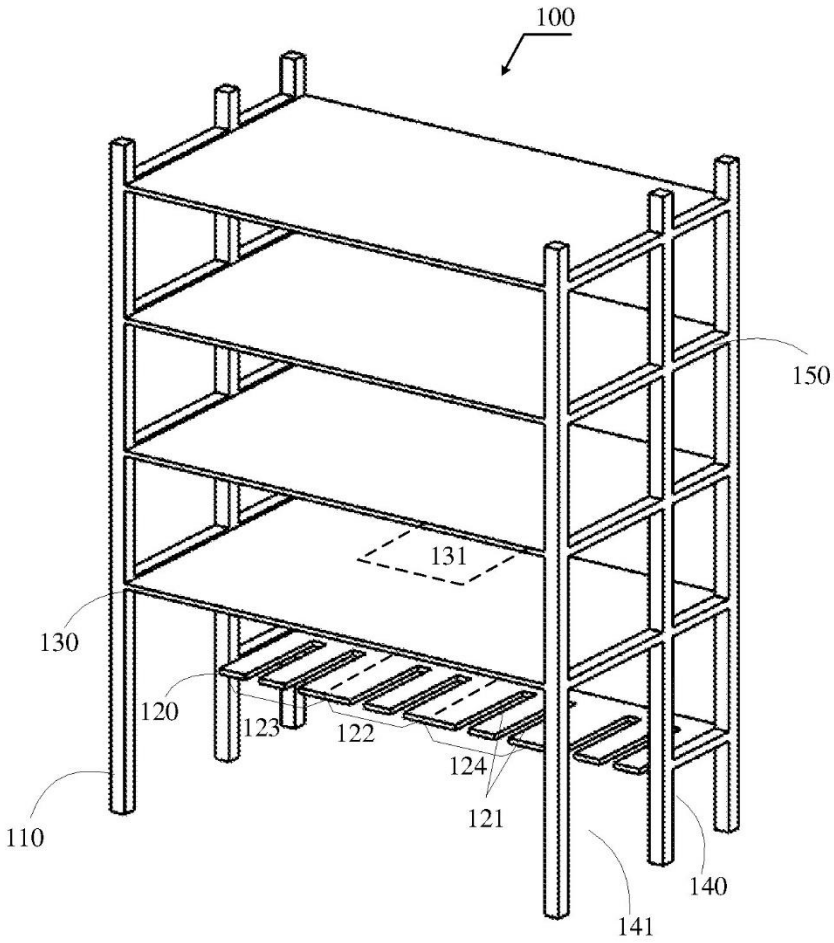

FIG. 4

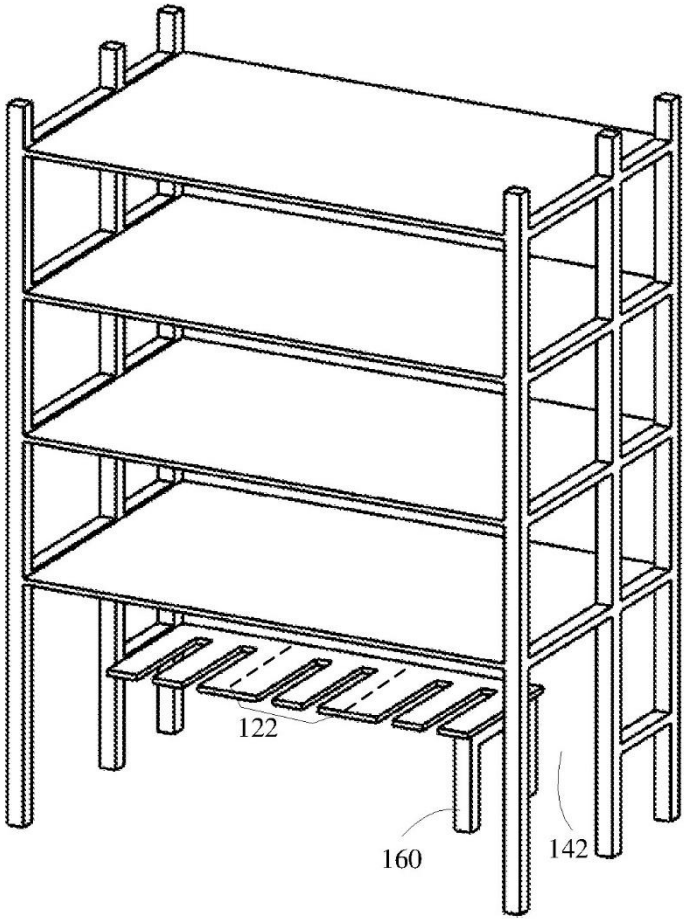

FIG. 5

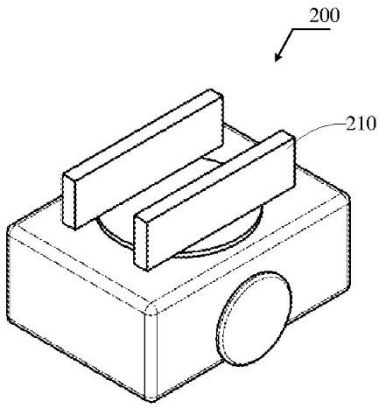

FIG. 6

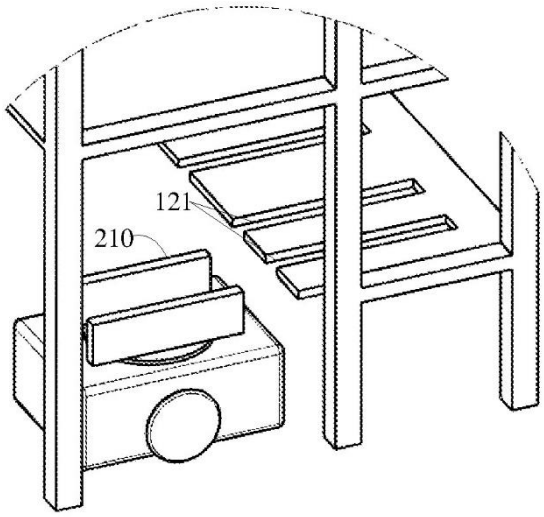

FIG. 7

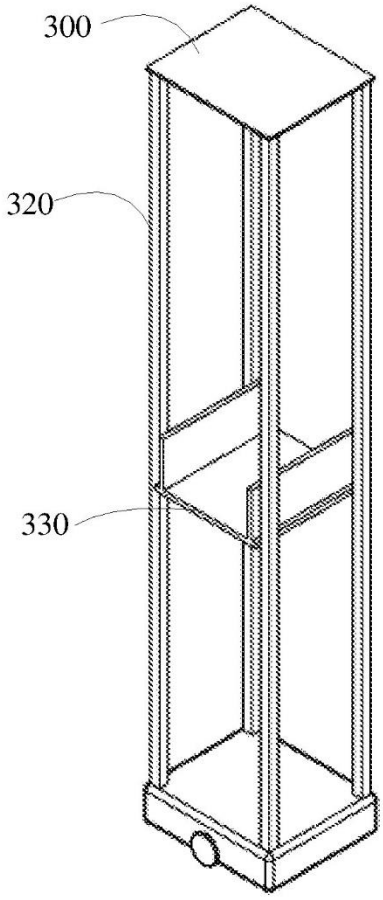

FIG. 8

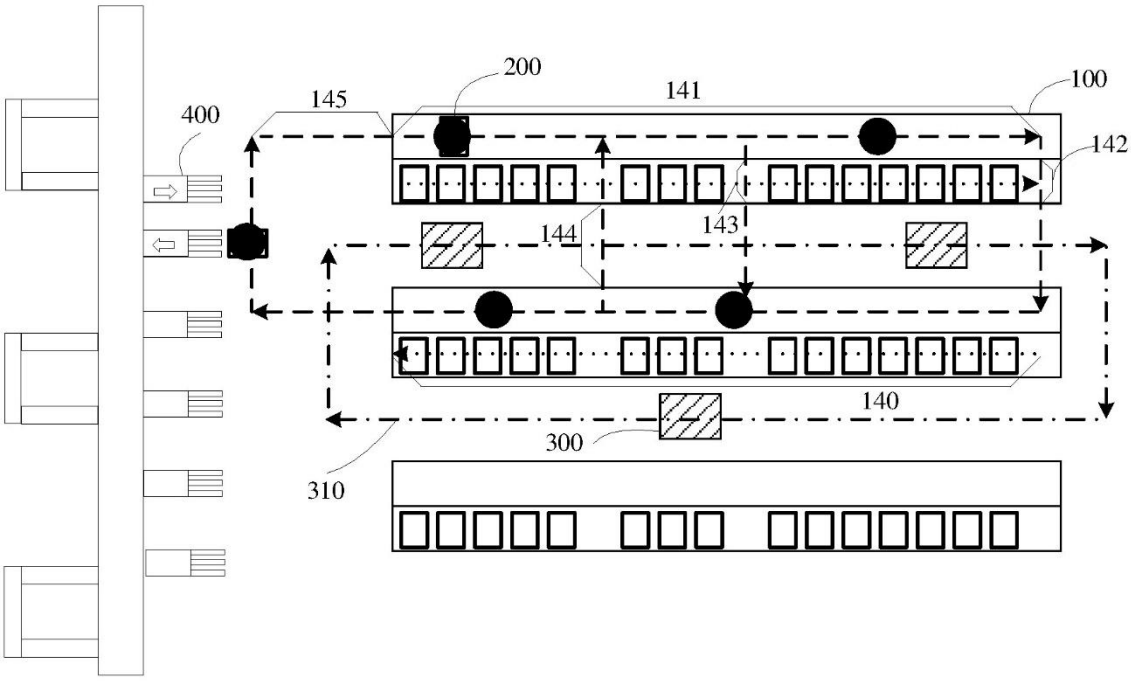
200
145
141
100
400
142
144
143
140
300
310

FIG. 9

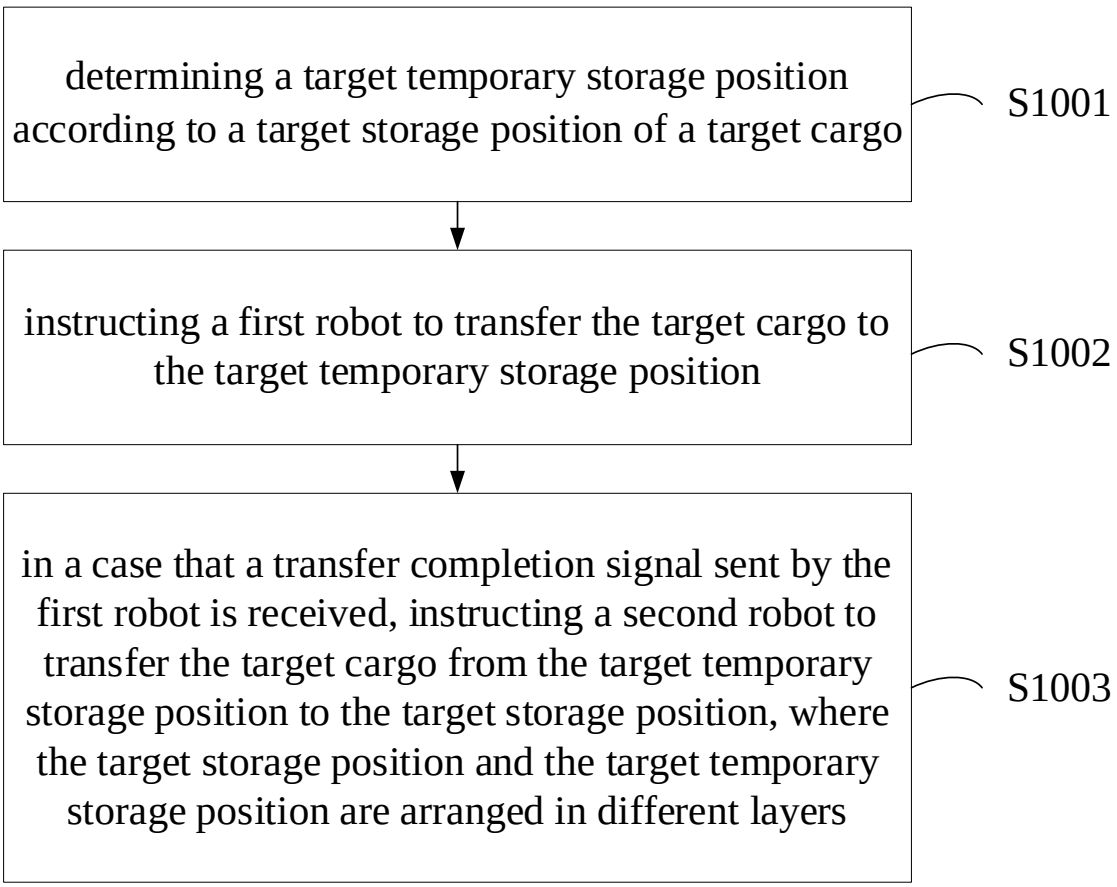
determining a target temporary storage position according to a target storage position of a target cargo
S1001
instructing a first robot to transfer the target cargo to the target temporary storage position
S1002
in a case that a transfer completion signal sent by the first robot is received, instructing a second robot to transfer the target cargo from the target temporary storage position to the target storage position, where the target storage position and the target temporary storage position are arranged in different layers
S1003

FIG. 10

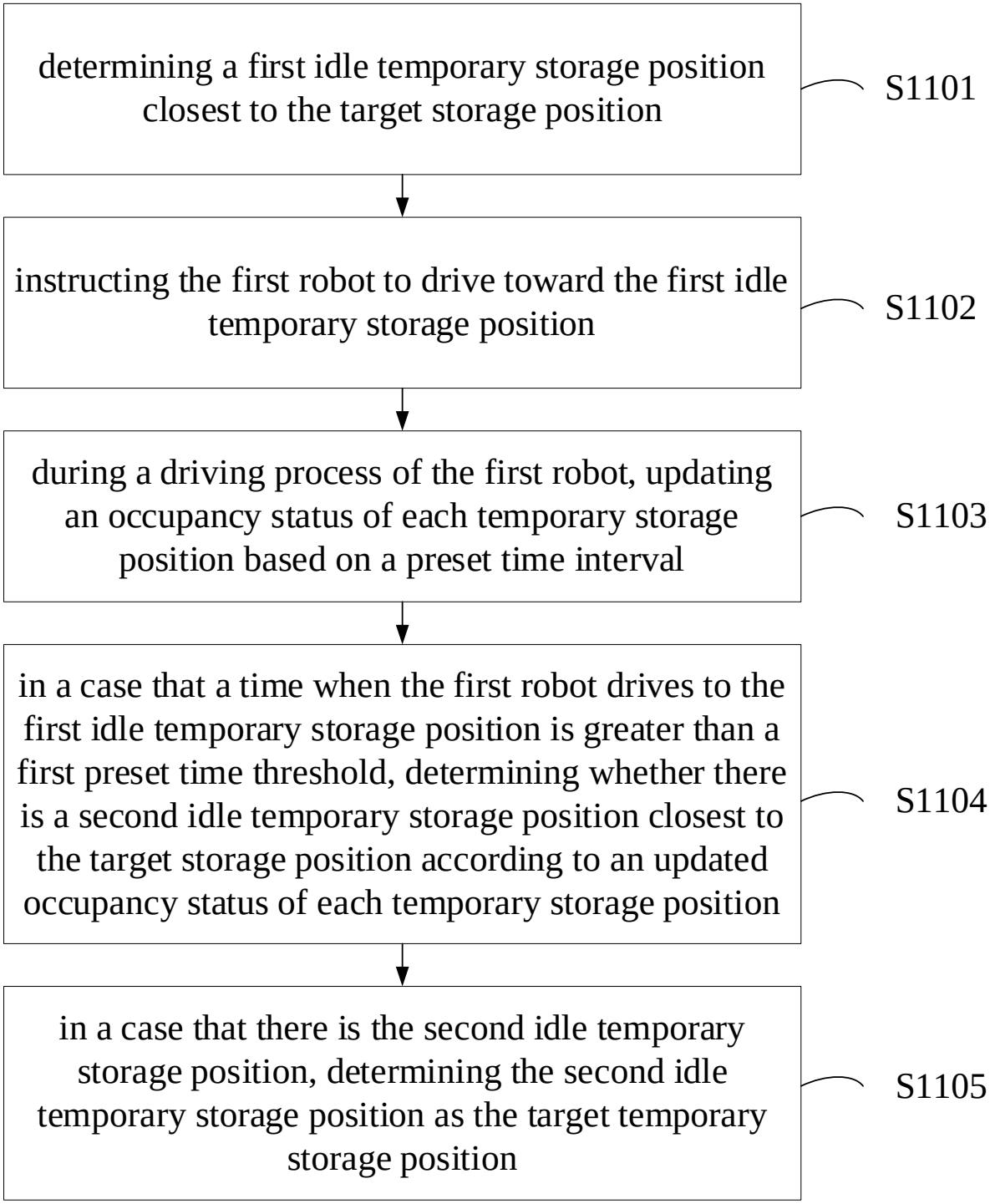
determining a first idle temporary storage position closest to the target storage position
S1101
instructing the first robot to drive toward the first idle temporary storage position
S1102
during a driving process of the first robot, updating an occupancy status of each temporary storage position based on a preset time interval
S1103
in a case that a time when the first robot drives to the first idle temporary storage position is greater than a first preset time threshold, determining whether there is a second idle temporary storage position closest to the target storage position according to an updated occupancy status of each temporary storage position
S1104
in a case that there is the second idle temporary storage position, determining the second idle temporary storage position as the target temporary storage position
S1105

FIG. 11

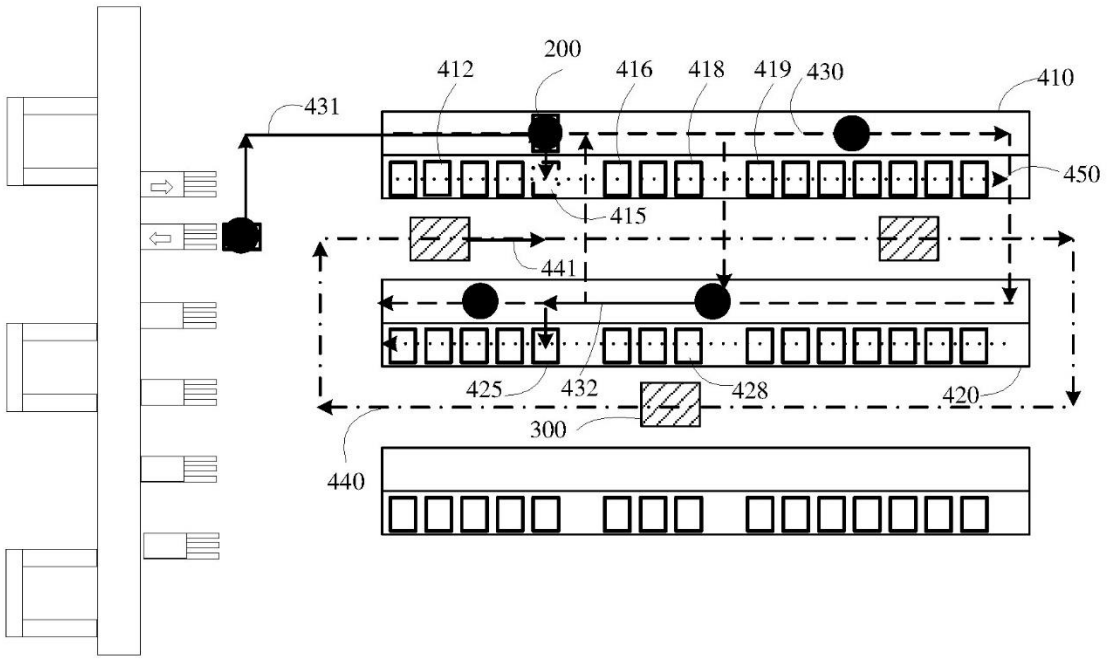
200
412
416
418
419
430
410
431
450
415
441
425
432
428
420
300
440

FIG. 12

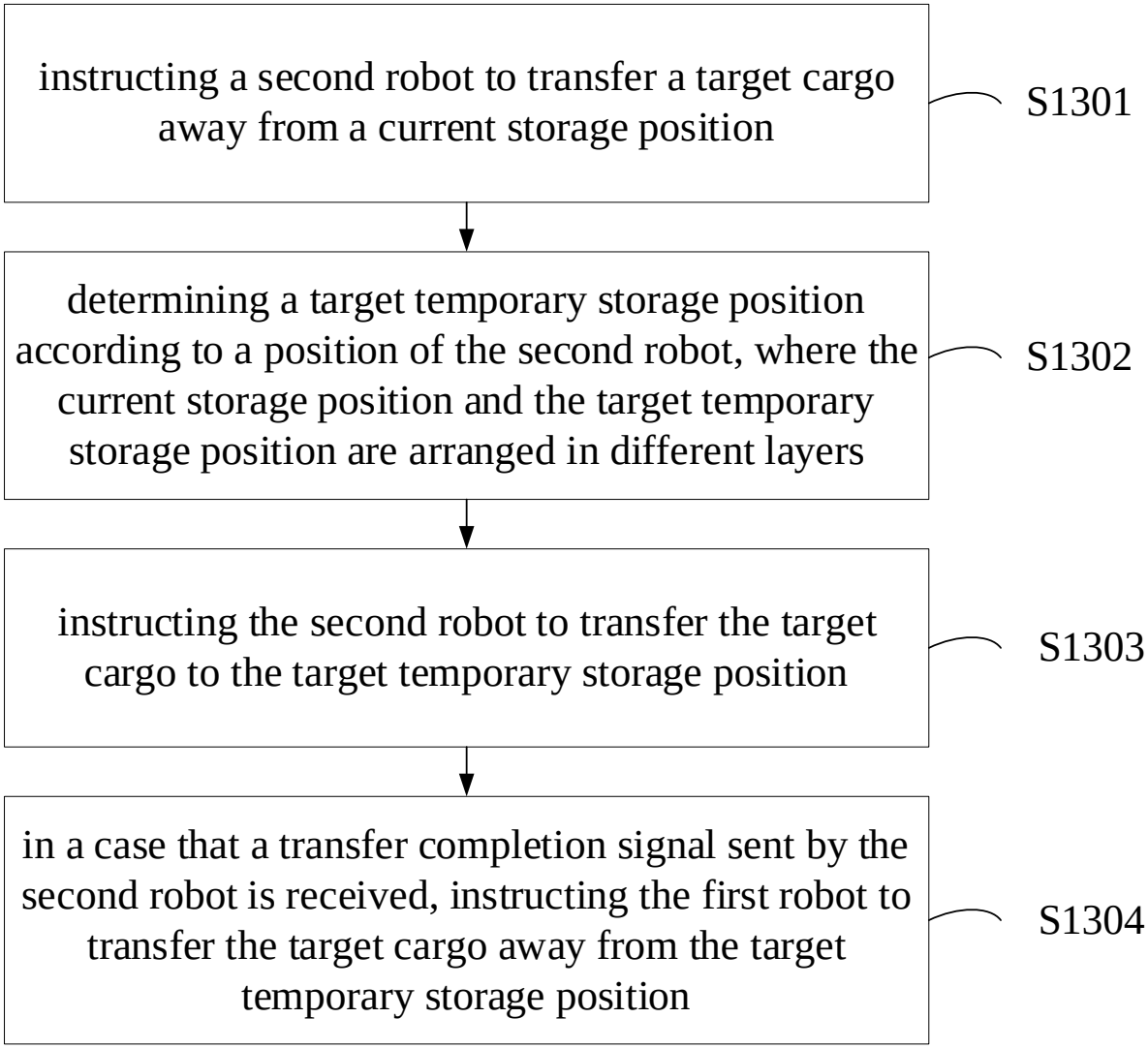
instructing a second robot to transfer a target cargo away from a current storage position
S1301
determining a target temporary storage position according to a position of the second robot, where the current storage position and the target temporary storage position are arranged in different layers
S1302
instructing the second robot to transfer the target cargo to the target temporary storage position
S1303
in a case that a transfer completion signal sent by the second robot is received, instructing the first robot to transfer the target cargo away from the target temporary storage position
S1304

FIG. 13

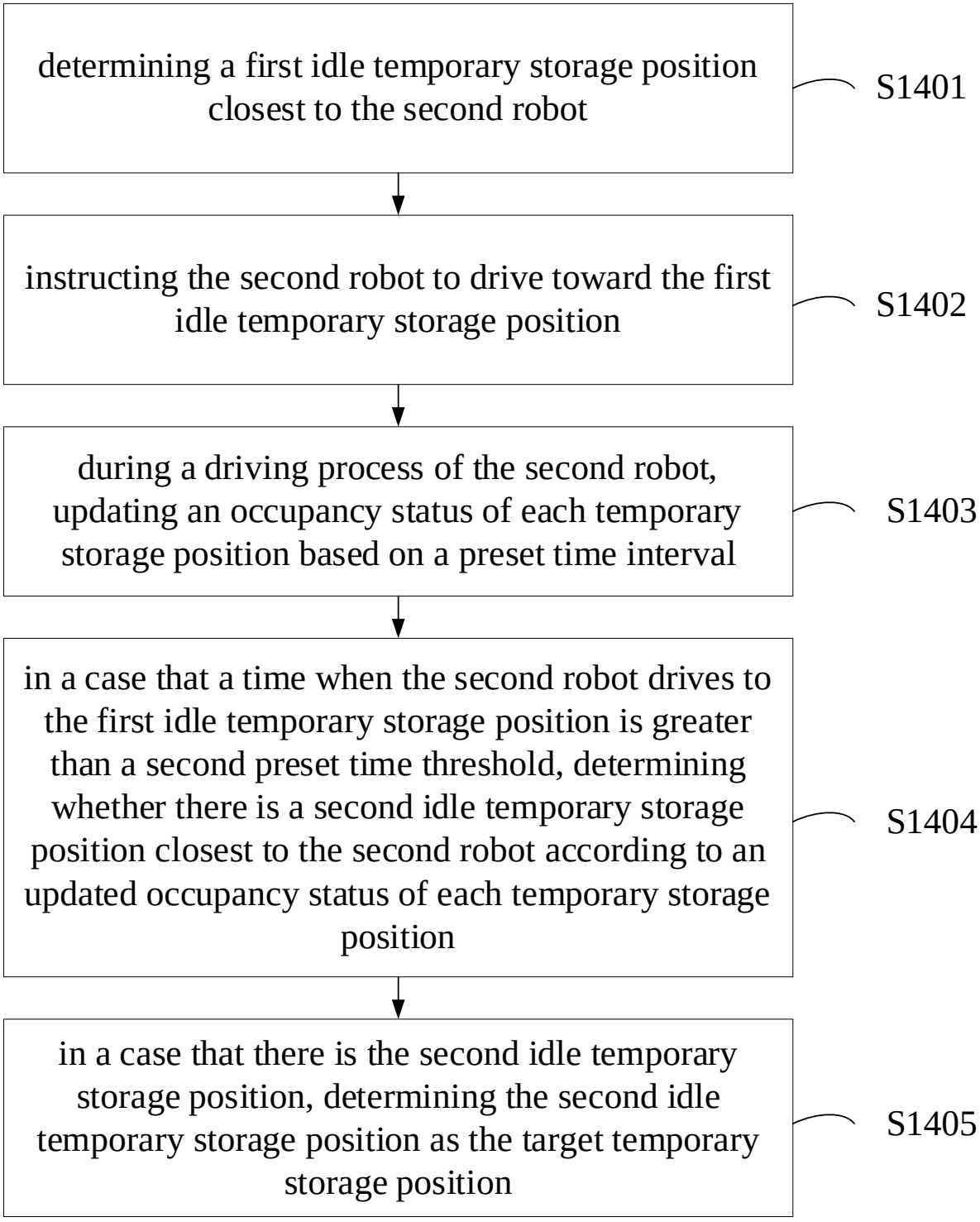
determining a first idle temporary storage position closest to the second robot
S1401
instructing the second robot to drive toward the first idle temporary storage position
S1402
during a driving process of the second robot, updating an occupancy status of each temporary storage position based on a preset time interval
S1403
in a case that a time when the second robot drives to the first idle temporary storage position is greater than a second preset time threshold, determining whether there is a second idle temporary storage position closest to the second robot according to an updated occupancy status of each temporary storage position
S1404
in a case that there is the second idle temporary storage position, determining the second idle temporary storage position as the target temporary storage position
S1405

FIG. 14

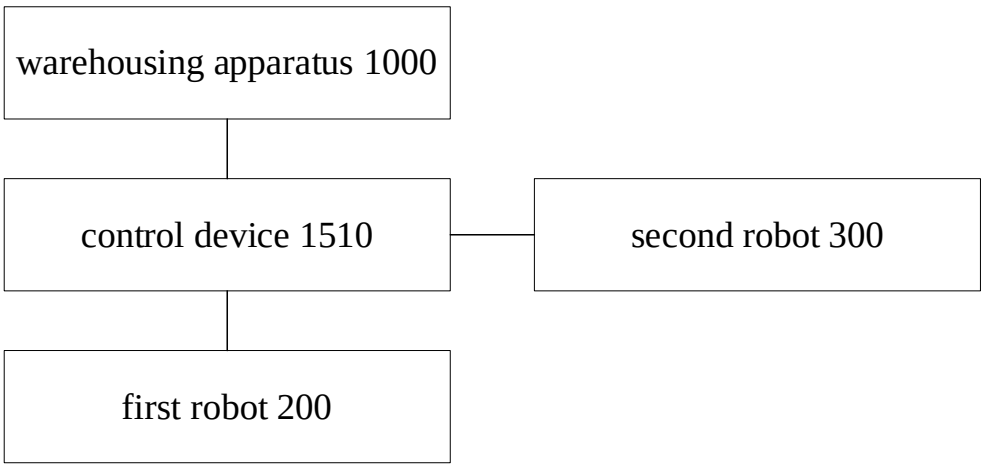

FIG. 15

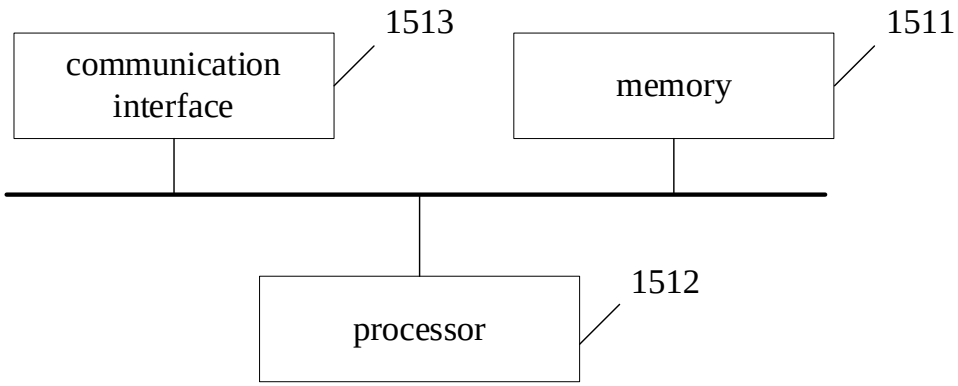

FIG. 16

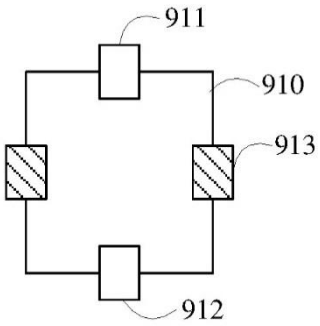

FIG. 17

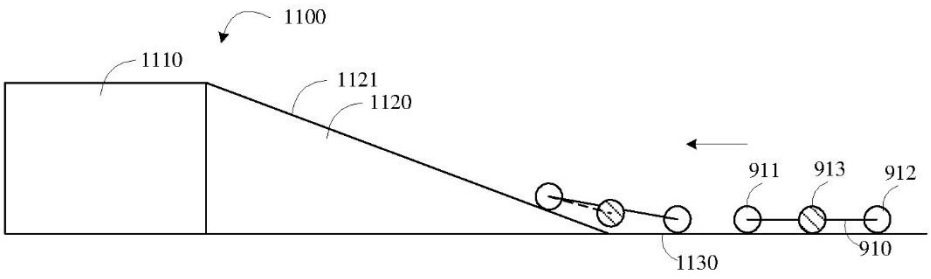

FIG. 18

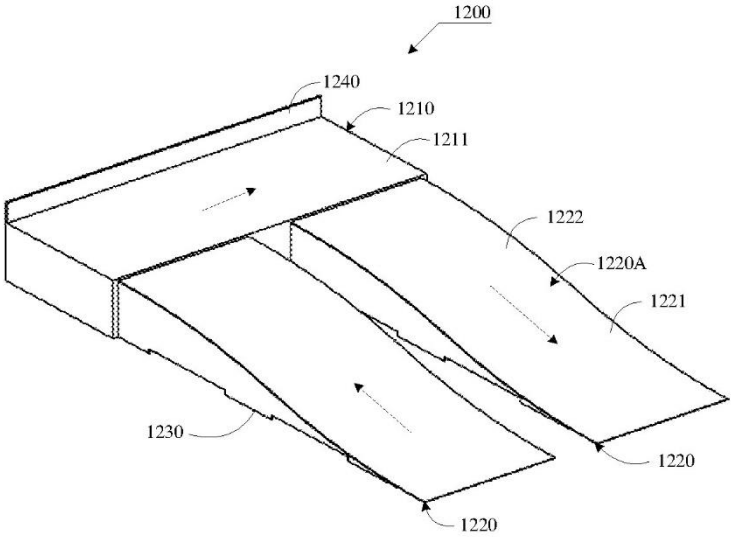

FIG. 19A

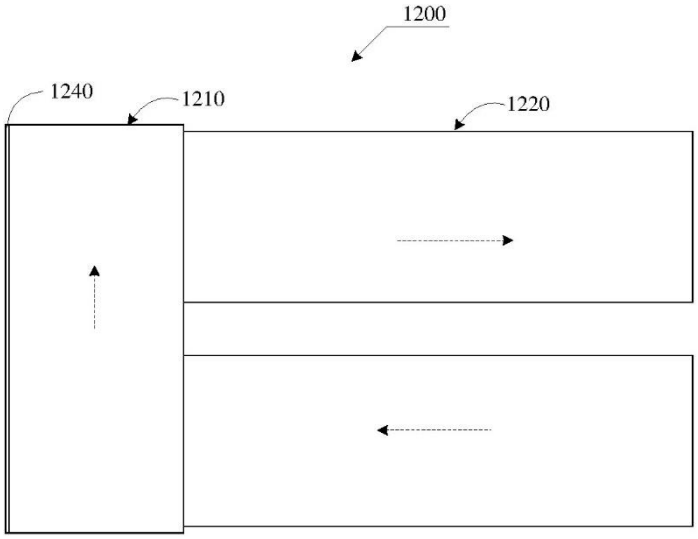

FIG. 19B

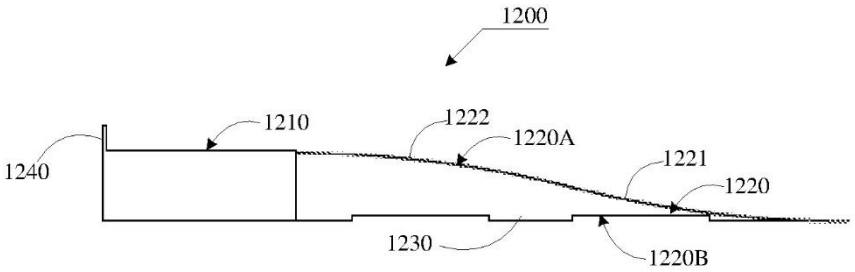

FIG. 19C

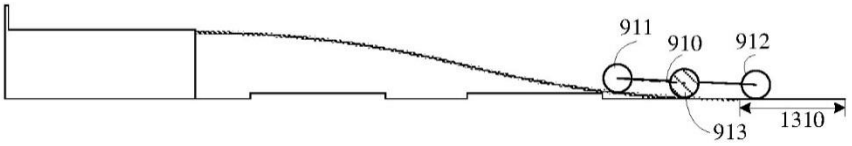

FIG. 20A

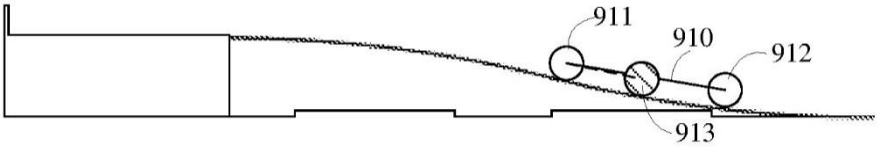

FIG. 20B

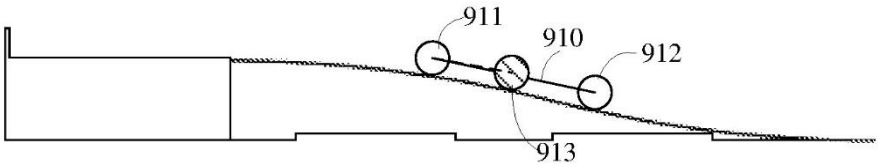

FIG. 20C

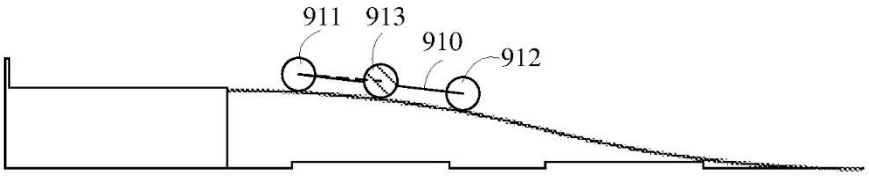

FIG. 20D

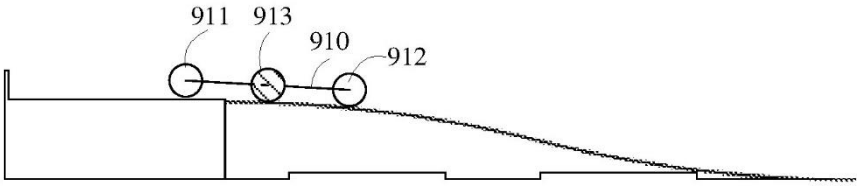

FIG. 20E

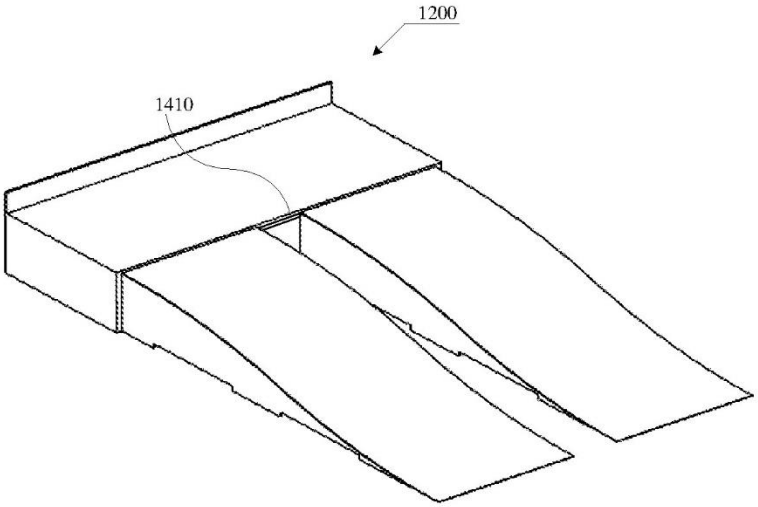

FIG. 21

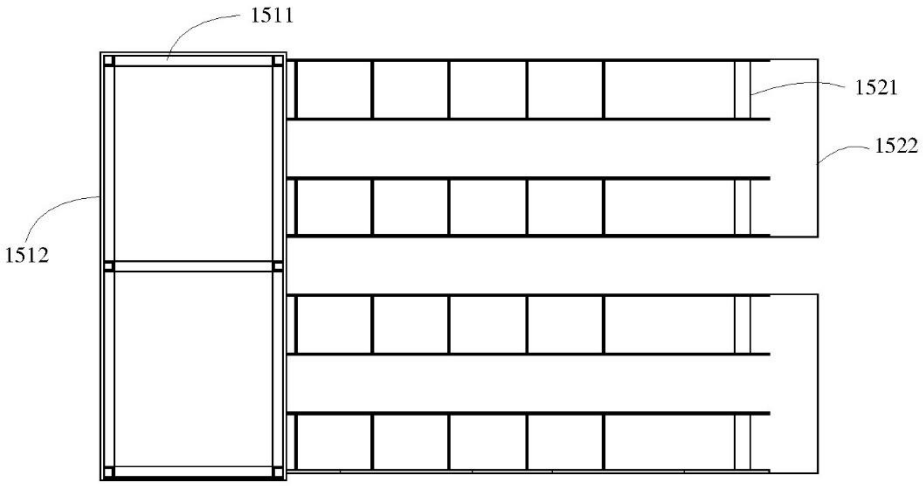

FIG. 22

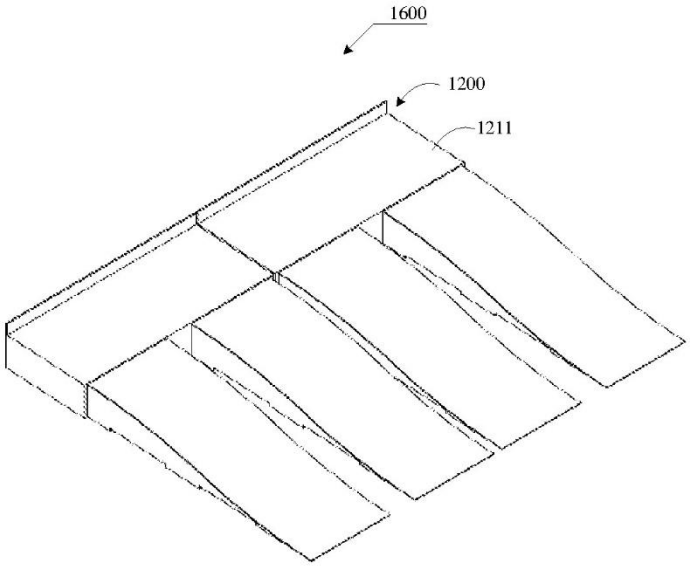

FIG. 23