RTMP COPY

REPLACED SHEETS SG
☑ Description : paged ...1... to paged ..10...
☑ Claim(s) : paged ..11.. to paged ..13...
☑ Drawing(s) : paged ..~~1/8~~ - to paged ..~~8/8~~ -
☑ Abstract : paged ..~~14~~ - to paged ..-...

Mobile partition element

The invention relates to a mobile partition element with a partition element leaf and at least one roller-type carriage whose rollers run on rolling surfaces of a track on either side of a longitudinal slot formed therein and on which the partition element leaf is suspended by means of at least one load-bearing element extending through the longitudinal slot of the track.

It is the object of the present invention to improve the roller-type carriage in such a way that forks or points in the track can also be negotiated without difficulty.

This object is achieved by the fact that with the partition element of the kind mentioned in the preamble the number and layout of the rollers of the roller-type carriage are selected so that during the negotiation of a fork in the track at least one roller is always supported on one of the rolling surfaces on either side of the longitudinal slot. The structure according to the invention, which moreover can also be installed without major sophistication and hence at low cost, makes it possible in a simple but effective manner to prevent the rollers of the roller-type carriage, when they cross over the longitudinal slot in a fork in the track, from dropping into the section of track to be crossed and remaining stuck there. The invention thus permits a smooth negotiation of the fork in a track. In this way the load-bearing function of the roller-type carriage is always guaranteed at any point in the track, including in the area of forks, so that the partition element is always kept at the same height.

Preferably the roller-type carriage comprises a first and a second pair of rollers disposed on either side of the longitudinal slot, wherein the second pair of rollers, viewed

This Sheet Has Been Replaced

in a first rolling direction of the roller-type carriage, lie in front of the first pair of rollers. The rollers of each pair are with expediency arranged symmetrically with respect to the longitudinal slot. The clearance between the rollers of the second pair should correspond to the width of the longitudinal slot. The gap between the rollers of the first pair should be greater than between the rollers of the second pair and preferably be so proportioned that the rollers of the first pair run essentially along the outer sides of the rolling surfaces of the track. This currently particularly preferred embodiment makes it possible in particular for a curved track section of a fork to be negotiated problem-free with crossing of the longitudinal slot of the other track section.

Since conventionally the load-bearing function needs to be assumed in the main only by one roller pair, the diameter of the rollers of the second pair can for example be smaller than the diameter of the rollers of the first pair.

A further preferred embodiment is distinguished by the fact that the roller-type carriage comprises a third pair of rollers disposed on either side of the longitudinal slot, which, viewed in the first rolling direction of the roller-type carriage, lie behind the first pair of rollers. The gap between the rollers of the third pair should correspond essentially to the gap between the rollers of the first pair, wherein with expediency the gap between the rollers of the third pair should be so proportioned that they run essentially along the outer side of the rolling surfaces. The arrangement of a third pair of rollers enables the operational stability of the roller-type carriage to be further increased, in particular during the negotiation of forks.

The diameter of the rollers of the third pair can be smaller than the diameter of the rollers of the first pair for the reasons already mentioned above. In addition the diameter of

This Sheet Has Been Replaced



the rollers of the third pair can correspond roughly to the diameter of the rollers of the second pair.

If the first pair of rollers assume essentially the load-bearing function, the load-bearing element should intersect a line connecting the centres of rotation of the rollers of the first pair of rollers. In this way not only does the greatest loading take place on the rollers of the first pair of rollers, but particularly stable and balanced operating characteristics of the roller-type carriage are also achieved. In a preferred development of this embodiment the rollers of each pair of rollers can lie on a common axis of rotation, wherein the axis of rotation of each pair of rollers should lie parallel to one another.

With expediency the roller-type carriage can be provided with at least one lateral guide roller whose axis stands vertically and which touches a side wall of the track, by means of which an exact guiding of the roller-type carriage along the track and in particular during the negotiation of forks can be achieved.

A preferred embodiment of the invention will be explained in detail below by means of the attached drawings, where

Figure 1	shows a diagrammatic side view of a partition element,
Figures 2a and b	show two different perspective views of a roller-type carriage,
Figures 3a, b and c	show a front view, a side view and a top view of the roller-type carriage and

This Sheet Has Been Replaced



Figures 4a to c show diagrammatically the negotiation of a fork of a track with the aid of the roller-type carriage according to the invention.

The partition element 1 shown diagrammatically in Figure 1 incorporates a partition element leaf 2 which consists conventionally of a metal frame and two cover plates fixed to the latter on either side. On the top side 4 of the partition element leaf 2 are fixed mounting bolts 6 which are pivotable on roller-type carriages 10 to be described in greater detail below. The roller-type carriages 10 run on running surfaces of a track 50 also to be described in greater detail below, which has a central slot running in longitudinal direction through which the mounting bolts 6 are passed, wherein the rolling surfaces of the track 50 are provided on either side of the central slot. Each partition element conventionally comprises two roller-type carriages 10 each with a mounting bolt 6 pivotable thereon.

A roller-type carriage 10 is shown in detail in Figures 2 and 3. The roller-type carriage 10 comprises a basic unit 12 which is provided with a continuous bore 14 for the pivoting of the mounting bolt 6. A first roller 18 and 19 is pivotable on the two sides 16 and 17 respectively of the basic unit 12. The rollers 18 and 19, which preferably run in ball bearings or form the outer race of a ball bearing (see in this connection in particular Figure 3b), lie on a common axis and form a first pair of rollers. The bore 14 for the pivoting of the mounting bolt 6 is moreover so disposed that its axis intersects essentially at right angles the common axis of the first pair of rollers, as a result of which the loads are assumed essentially by the first track rollers 18, 19. Considered in the viewing direction of Figure 2a, there are disposed in the area of the front end 20 of the basic unit 12 in front of the first track rollers 18 and 19 two second track rollers 21 and 22 with a gap between them. The track rollers

This Sheet Has Been Replaced



21 and 22, which preferably also run in ball bearings or form the outer race of a ball bearing, are moreover disposed for the most part recessed in the basic unit 12, wherein they stand with their periphery slightly proud of the front end 20 of the basic unit 12 and protrude out of its underside 23. The track rollers 21 and 22 lie on a common axis and form a second pair of rollers. Adjacent to the rear end 24 of the basic unit 12 and behind the first track rollers 18 and 19 in the viewing direction of Figure 2a there are pivoted on both the sides 16 and 17 respectively of the basic unit 12 a third track roller 25 and 26, which also preferably runs in ball bearings or consists of the outer race of a ball bearing (see Figure 3b). The two track rollers 25 and 26 lie on a common axis and form a third pair of rollers.

Since the loads are assumed essentially by the first track rollers 18, 19, the diameter of the latter are visibly greater than that of the second and third track rollers 21, 22 and 25, 26, which have essentially the same diameter. The gap between the track rollers 25 and 26 of the third pair of rollers is roughly equal to the gap between the track rollers 18 and 19 of the first pair of rollers, while the gap between the track rollers 21 and 22 of the second pair of rollers is smaller. In the embodiment shown the gap between the outer sides of the track rollers 21 and 22, namely the sides facing the sides 16, 17 of the basic unit 12, is slightly smaller than the clearance between the inner sides of the first track rollers 18 and 19, namely the sides facing the basic unit 12.

As Figures 2 and 3 likewise make clear, the track rollers of each pair of rollers are disposed symmetrically relative to a notional centre line running in the direction of travel, which is also intersected by the axis of the continuous bore 14 for the rotatable accommodation of the mounting bolt. Not only the second track rollers 21 and 22, but also the first track rollers 18 and 19 together with the third track rollers 25 and 26, protrude with their periphery slightly beyond the

This Sheet Has Been Replaced



underside 23 of the basic unit 12. Moreover the axes of these track rollers are each, as a function of their diameter, disposed at such a height that the track rollers lie with the underside of their periphery on a common plane which is formed by the rolling surface of the track described below.

On the top side 28 of the basic unit 12 there are pivotable adjacent to the one side 17 two guide rollers 29 and 30 with a gap between them such that their axes stand essentially vertically and lie at right angles to the horizontally lying axes of the track rollers 18, 19, 21, 22, 25 and 26. The guide rollers 29 and 30 run in a guide groove provided in the track, as a result of which the roller-type carriage is guided precisely into the desired direction of a fork.

Figure 4 shows diagrammatically in top view a section of a track 50 with a fork 60. There is furthermore indicated the position of the track rollers 18, 19, 21, 22, 25 and 26 and of the guide rollers 29, 30 of a roller-type carriage 10 of the kind described above displaceable along the track 50, wherein on grounds of simplicity only the track rollers and guide rollers are shown diagrammatically, while the remaining parts of the roller-type carriage described above are omitted. It should also be mentioned in this connection that the guide rollers 29, 30 are disposed on the opposite side 16 of the basic unit 12 compared with the views in Figures 2 and 3. It can be seen from this that the arrangement of the guide rollers 29, 30 is not limited to one of the two sides 16, 17 of the basic unit 12; instead the arrangement of the guide rollers 29, 30 is determined by the question on which side of the track 50 a guide groove 55 is provided with which the guide rollers 29, 30 engage and which is discussed in greater detail below.

As can be seen from Figure 4a, the track 50 shows a central slot 52 running along its centre line in longitudinal direction, through which the mounting bolt 6 (cf. Figure 1)

This Sheet Has Been Replaced



extends, and plane horizontal rolling surfaces 53 and 54, formed on either side of the central slot 52, on which the track rollers 18, 19, 21, 22, 25 and 26 are supported. The rolling surfaces 53 and 54 are each bounded outwardly by side walls 51.

In Figure 4a there can be discerned the gaps, selected with the roller-type carriage 10 constructed as described before, between the track rollers of each roller pair in relation to the dimensions of the track 50. The essentially identical gap between the track rollers 18, 19 of the first track roller pair and the track rollers 25, 26 of the third track roller pair is selected so that the track rollers 18, 19, 25 and 26 run adjacent to the side walls 51 bordering the rolling surfaces 53, 54; the gap between the outer sides of the track rollers 18, 25 on the one hand and the track rollers 19, 26 on the other and hence the width of the first and third track roller pairs therefore corresponds roughly to the width of the track 50, but is slightly narrower. Conversely the clearance between the inner sides of the track rollers 21, 22 of the second track roller pair corresponds to the width of the central slot 52, so that these two track rollers 21, 22 run on either side of the central slot 52 directly along the latter.

The section which is shown in Figure 4a of the track 50 contains a fork 60, whereby the track 50 is divided into a first section 50a continuing in a straight line and a curved forking second section 50b. Consequently the first rolling surface 53 merges with the rolling surface 53a of the first track section 50a, while the second rolling surface 54 merges with the rolling surface 54b of the second track section 50b. With the fork 60 the central slot 52 also divides into the central slot 52a of the first track section 50a and the central slot 52b of the second track section 50b. Consequently there is formed in the first track section 50a a new second rolling surface 54a, which lines up with the second rolling surface 54, but is separated from the latter by the central

This Sheet Has Been Replaced



slot 52b, forking off from the central slot 52, of the second track section 50b. There is furthermore formed by the fork 58 in the second track section 50b a new first rolling surface 53b, which has together with the second rolling surface 54a of the first track section 50a a common origin in the area of the fork 60, but is disconnected from the first rolling surface 53 by the central slot 52a of the first track section 50a and borders opposite the second rolling surface 54b the other side of the central slot 52b of the second track section 50b.

In the embodiment shown in Figure 4a there is provided in the area of the second rolling surface 54, which merges with the second rolling surface 54b of the forking second track section 50b, a guide groove 56 which follows the curved shape of the forking second track section 50b. The guide groove 56 is disposed above the rolling surface 54 or 54b (for example on the top side of a hollow section forming the track 50) and is bordered by two side walls 57 and 58 between which the guide rollers 29 and 30 of the roller-type carriage run. The described course of the guide groove 66 produces in the embodiment shown a compulsory guiding of the roller-type carriage from the track 50 through the fork 56 into the forking second track section 50b. A guide groove can naturally also be provided in the area of the first rolling surface 53 of the track 50 and of the adjoining first rolling surface 53a of the track 50 of the first track section 50a continuing in a straight line, so that roller-type carriages are necessarily moved, together with guide rollers directed in such a guide groove, through the fork 56 straight on into the first track section 50a.

In the following Figures 4b to 4e it is shown diagrammatically how the roller-type carriage described before is moved through the fork 56 into the forking curve-shaped second track section 50b. On grounds of simplicity only the most important reference symbols are given in these figures.

This Sheet Has Been Replaced



Over the whole of the movement path shown the first to third track rollers 18, 22 and 25 have permanent contact with the second rolling surface 54 of the track 50 and with the adjoining second rolling surface 54b of the forked second track section 50b.

In the position shown in Figure 4b, in which the roller-type carriage is entering the fork, the second track roller 21 is crossing the central slot 52a of the first track section 50a and is therefore hanging "in the air". An undesirable tilting of the roller-type carriage is nevertheless prevented, but the roller-type carriage remains in its horizontal position, since the first track roller 19 and the third track roller 26 are still supported on the first rolling surface 53 of the track 50 and hence ensure together with the opposite track rollers 18, 22 and 25 a reliable support of the roller-type carriage. The latter is also supported by the fact that the bore 14 (see Figures 2 and 3), which rotatably accommodates the mounting bolt 6 (see Figure 1) through which the entire load transfer takes place, intersects vertically with its axis the axis of the first track roller pair 18, 19, as a result of which practically the whole of the load is absorbed by the first track rollers 18, 19.

In the position shown in Figure 4c, although the first track roller 19 crosses the central slot 52a of the first track section 50a, the roller-type carriage is nevertheless also supported, in addition to the track rollers 18, 22 and 25 supported on the opposite second rolling surface 54 or 54b, by the preceding second track roller 21, which is already supported on the first rolling surface 53 of the forking second track section 50b, as well as by the lagging third track roller 26, which is still supported on the first rolling surface 53 of the track 50.

In the situation shown in Figure 4d the roller-type carriage has been moved forward into the forking second track section

This Sheet Has Been Replaced



50b to a sufficient extent that the first track roller 18 and the second track roller 21 are now already supported on the first rolling surface 53b of the second track section 50b, while the lagging third track roller 26 is suspended above the central slot 52a to be crossed of the first track section 50a.

In the situation shown in Figure 4a the roller-type carriage has now been moved forward completely into the forked second track section 50b, so that now all the track rollers 18, 19, 21, 22, 25 and 26 are supported on the rolling surfaces 53b and 54b of the second track section 50b and the roller-type carriage can now be moved further along this second track section 50b.

As has already been explained before with reference to Figure 4a, because of the described layout of the track rollers the roller-type carriage can be moved through a fork 56 problem-free without it falling together with a track roller into a central slot which it has to cross and sticking there.

This Sheet Has Been Replaced

* C L M S *

CLAIMS

1. Mobile partition element with a partition element leaf and at least one roller-type carriage whose rollers run on rolling surfaces of a track on either side of a longitudinal slot formed therein and on which the partition element leaf is suspended by means of at least one load-bearing element extending through the longitudinal slot of the track characterised in that the number and layout of the rollers of the roller-type carriage are so selected that during the negotiation of a fork in the track at least one roller is always supported on one of the rolling surfaces on either side of the longitudinal slot.

2. Mobile partition element according to claim 1, characterised in that the roller-type carriage comprises a first and a second pair of rollers disposed on either side of the longitudinal slot, wherein the second pair of rollers, viewed in a first rolling direction of the roller-type carriage, lies in front of the first pair of rollers.

3. Mobile partition element according to claim 1 or 2, characterised in that the rollers of each pair are arranged symmetrically relative to the longitudinal slot.

4. Mobile partition element according to claim 3, characterised in that the clearance between the rollers of the second pair corresponds to the width of the longitudinal slot.

5. Mobile partition element according to at least one of claims 2 to 4,
characterised in that the gap between the rollers of the first pair is greater than between the rollers of the second pair.

This Sheet Has Been Replaced

6. Mobile partition element according to at least one of claims 2 to 5,
characterised in that the gap between the rollers of the first pair is so proportioned that they run essentially along the outer sides of the rolling surfaces of the track.

7. Mobile partition element according to at least one of claims 2 to 6,
characterised in that the diameter of the rollers of the second pair is smaller than the diameter of the rollers of the first pair.

8. Mobile partition element according to claim 2 and optionally at least one of the other claims, characterised in that the roller-type carriage comprises a third pair of rollers disposed on either side of the longitudinal slot, which, viewed in the first rolling direction of the roller-type carriage, lie behind the first pair of rollers.

9. Mobile partition element according to claim 8, characterised in that the gap between the rollers of the third pair corresponds essentially to the gap between the rollers of the first pair.

10. Mobile partition element according to claim 8 or 9, characterised in that the gap between the rollers of the third pair is proportioned so that they roll essentially along the outer sides of the rolling surfaces of the track.

11. Mobile partition element according to at least one of the claims 8 to 10,
characterised in that the diameter of the rollers of the third pair is smaller than the diameter of the rollers of the first pair.

12. Mobile partition element according to claims 7 and 11 characterised in that the diameter of the rollers of the third pair corresponds roughly to the diameter of the rollers of the second pair.

This Sheet Has Been Replaced

* C L M S *

13. Mobile partition element according to claim 2 and optionally at least one of the other claims, characterised in that the load-bearing element intersects a line connecting the points of rotation of the rollers of the first roller pair.

14. Mobile partition element according t claim 2 and optionally at least one of the other claims, characterised in that the rollers of each roller pair lie in a common axis of rotation.

15. Mobile partition element according to claim 14, characterised in that the axes of rotation of each roller pair run parallel to one another.

16. Mobile partition element according to at least one of claims 1 to 15,
characterised in that the roller-type carriage is provided with at least one lateral guide roller whose axis stands vertically and which touches a side wall formed on the track..

This Sheet Has Been Replaced

ABSTRACT

MOBILE PARTITION ELEMENT

Mobile partition element with a partition element leaf (2) at least one roller-type carriage (10) whose rollers (18, 19, 21, 22, 25, 26) run on rolling surfaces (53, 54) of a track (50) on either side of a longitudinal slot (52) formed therein and on which the partition element leaf (2) is suspended by means of at least one load-bearing element (6) extending through the longitudinal slot (52) of the track (50) characterised in that the number and layout of the rollers (18, 19, 21, 22, 25, 26) of the roller-type carriage (10) are so selected that during the negotiation of a fork (60)in the track (50) at least one roller is always supported on one of the rolling surfaces (53, 54) on either side of the longitudinal slot (52).

Figs. 1 and 2

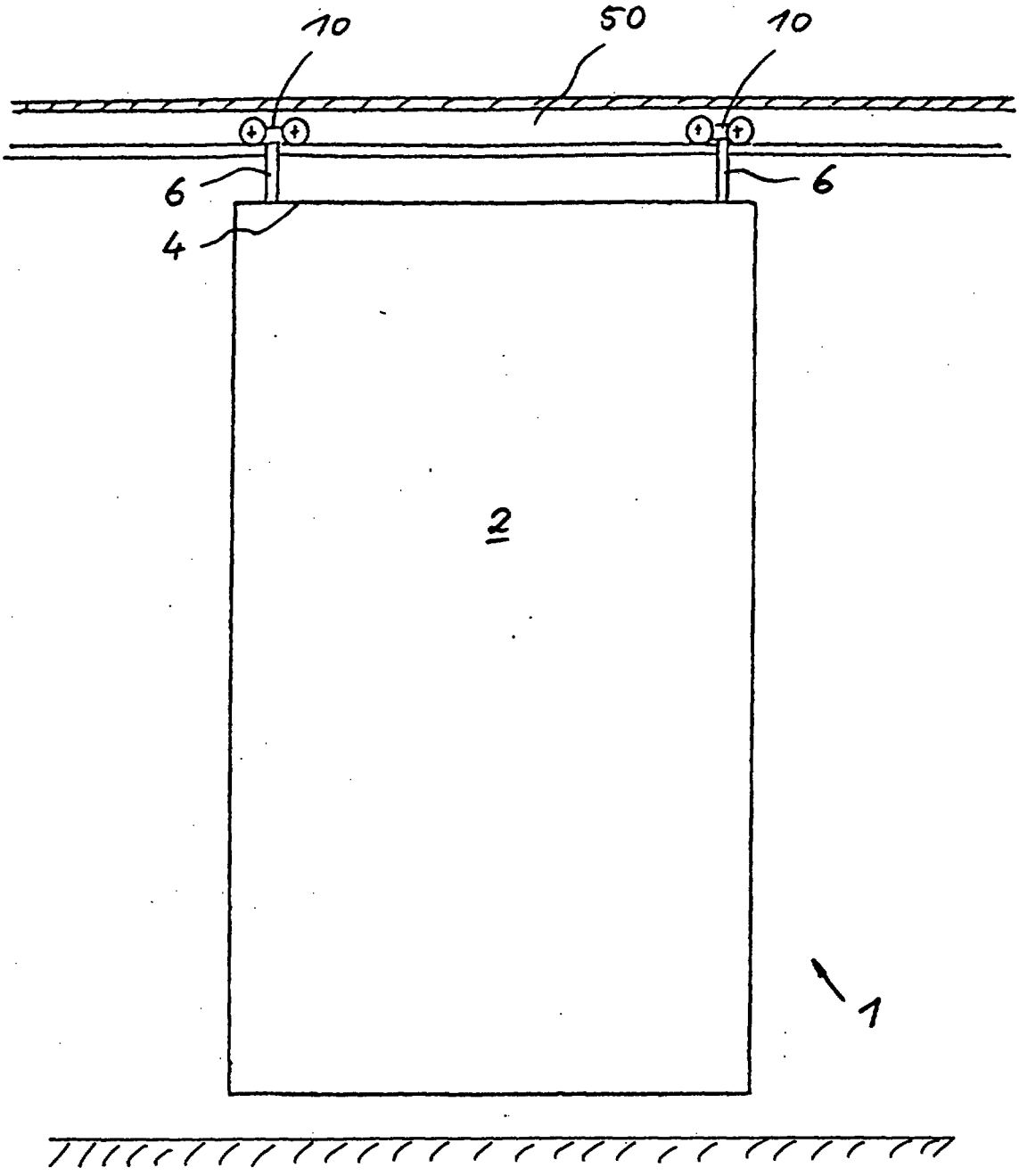

Fig. 1

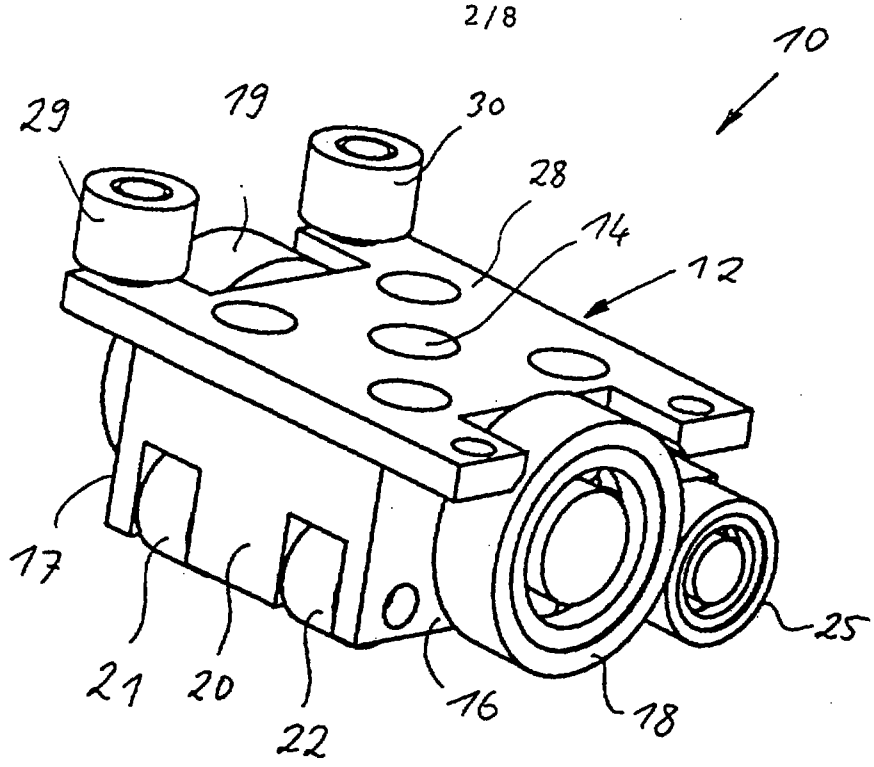
10
29
19
30
28
14
12
17
21
20
22
16
18
25

a

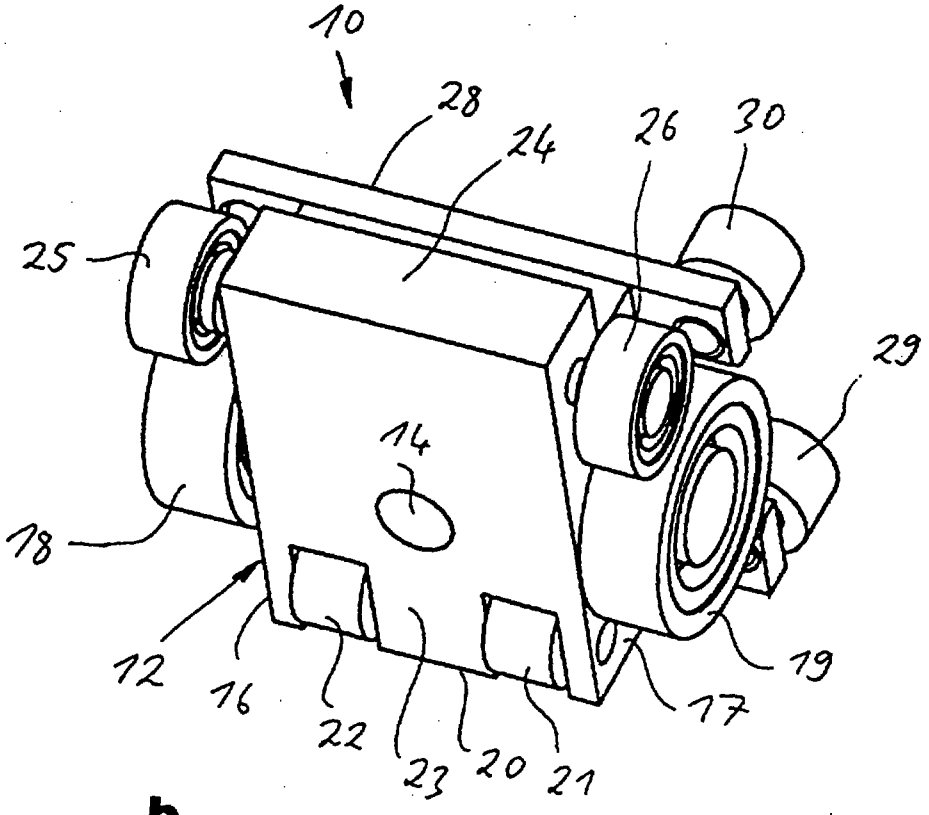
10
28
24
26
30
25
29
14
18
12
16
22
23
20
21
17
19

b

Fig. 2

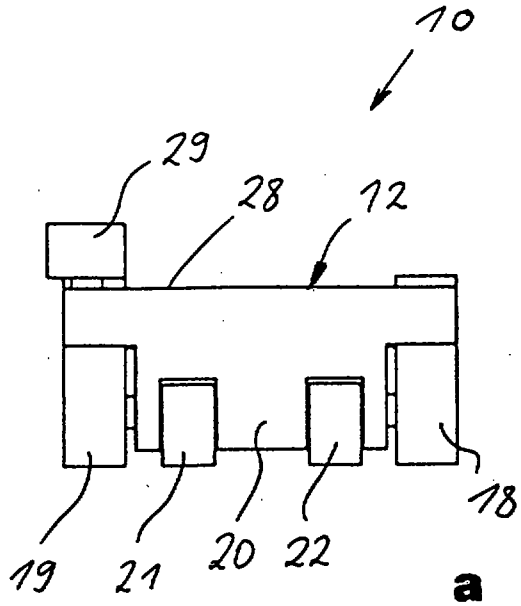
10
29
28
12
18
19
21
20
22

a

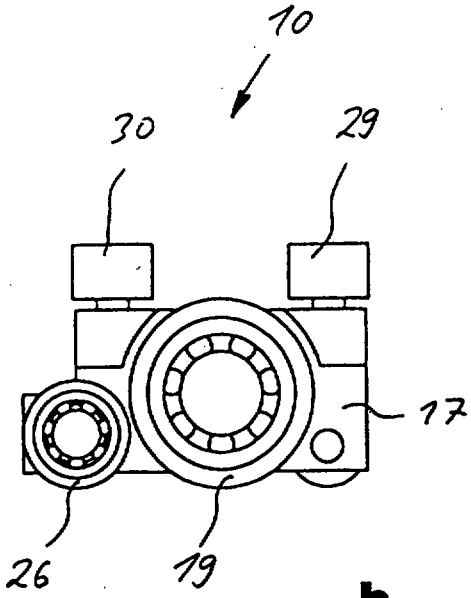
10
30
29
17
26
19

b

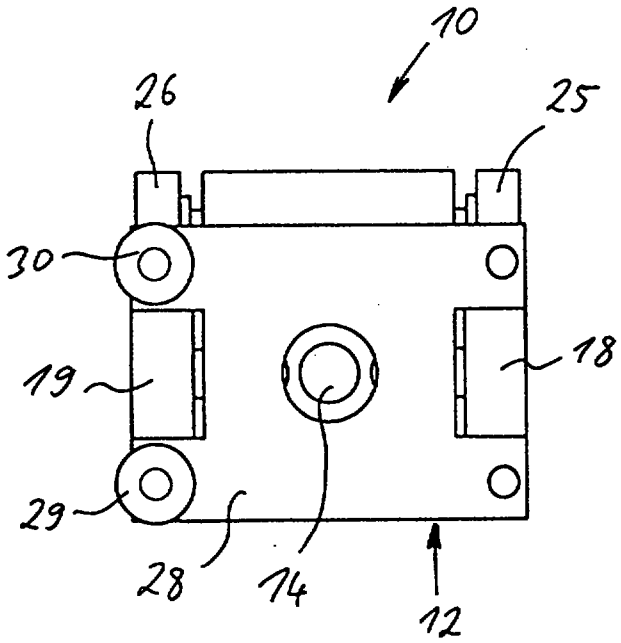
10
26
25
30
18
19
29
28
14
12

c

Fig. 3

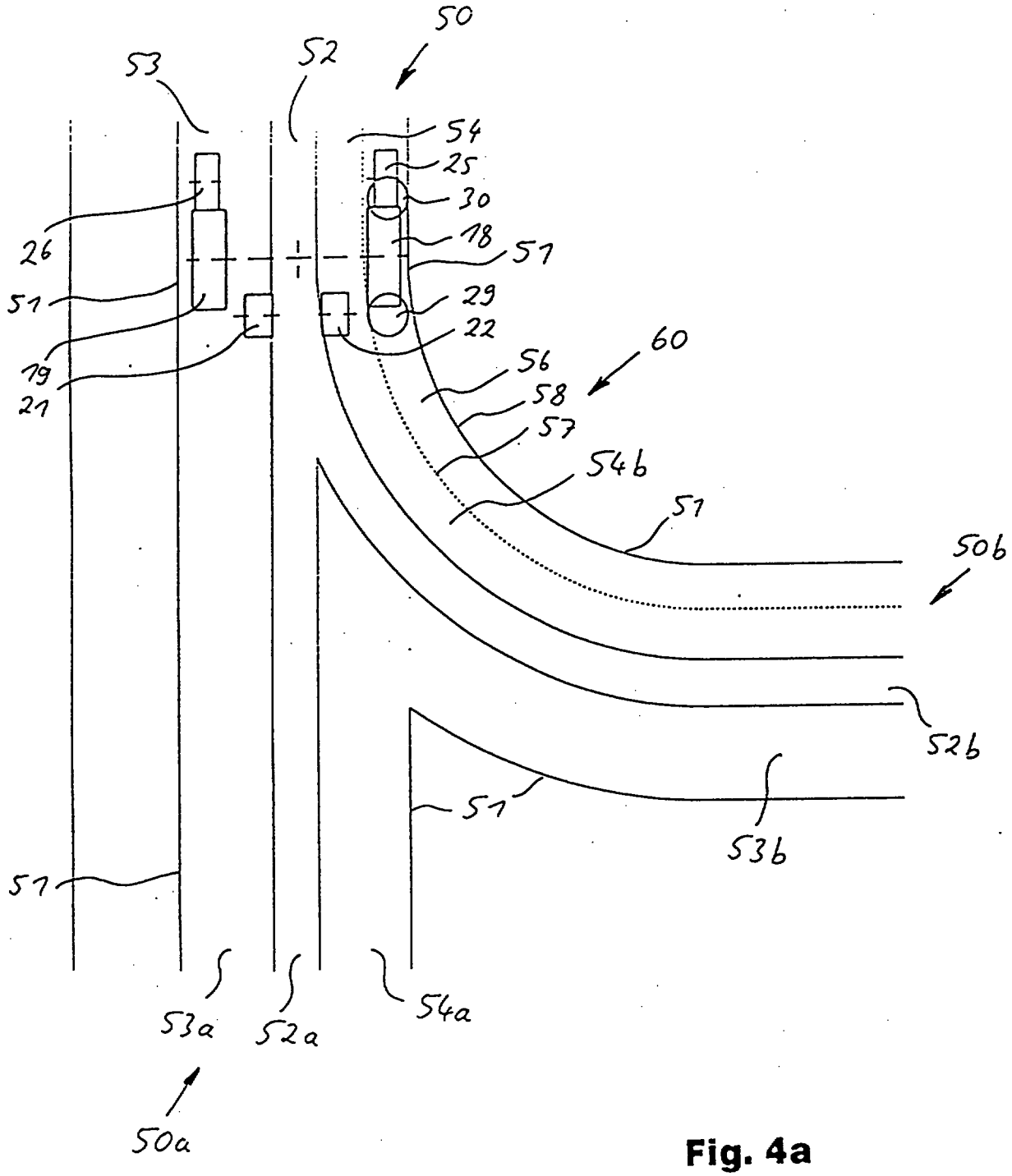
50
53
52
54
25
30
18
51
26
51
29
22
19
21
60
56
58
57
54b
51
50b
52b
51
53b
51
53a
52a
54a
50a

Fig. 4a

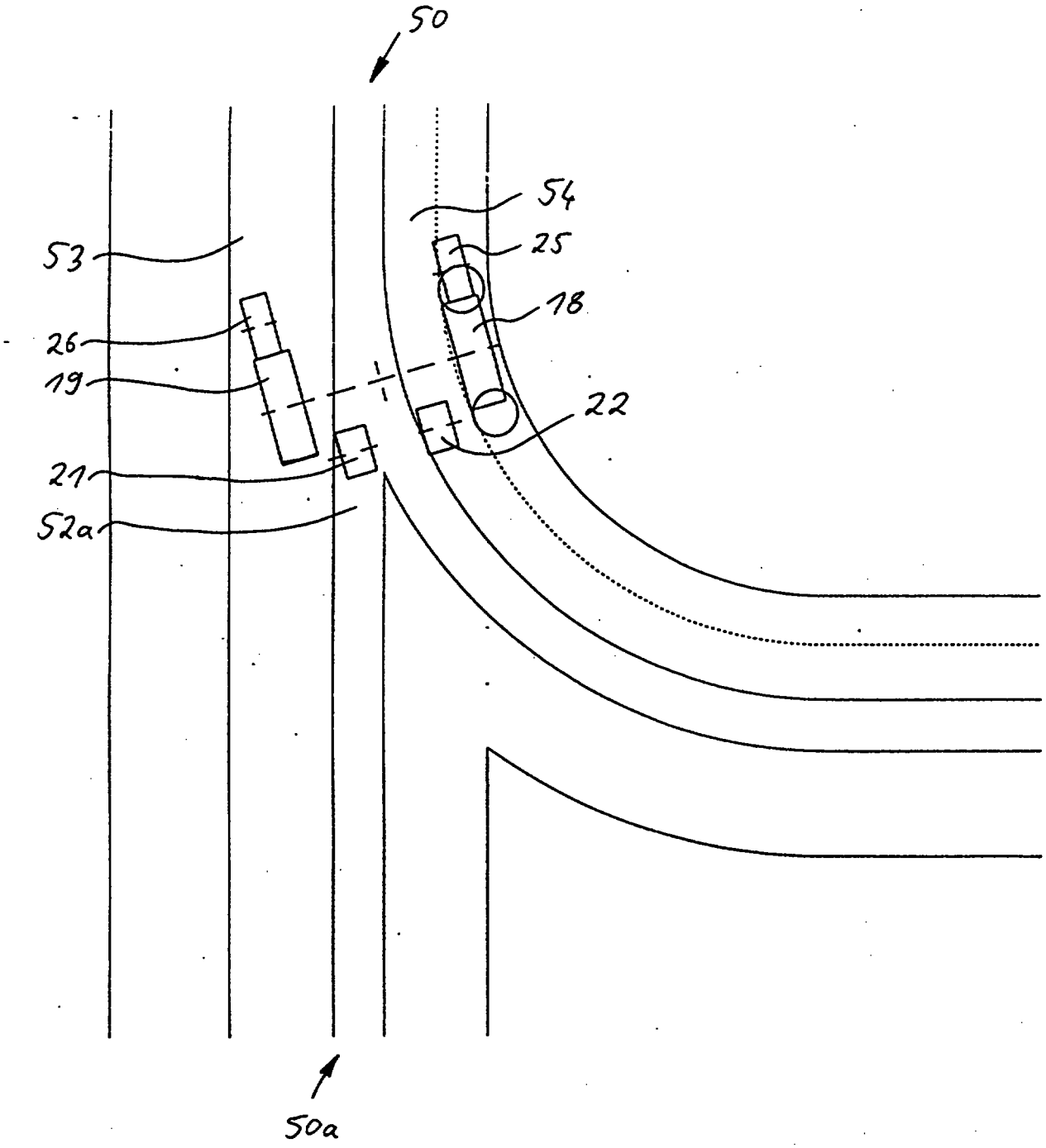

Fig. 4b

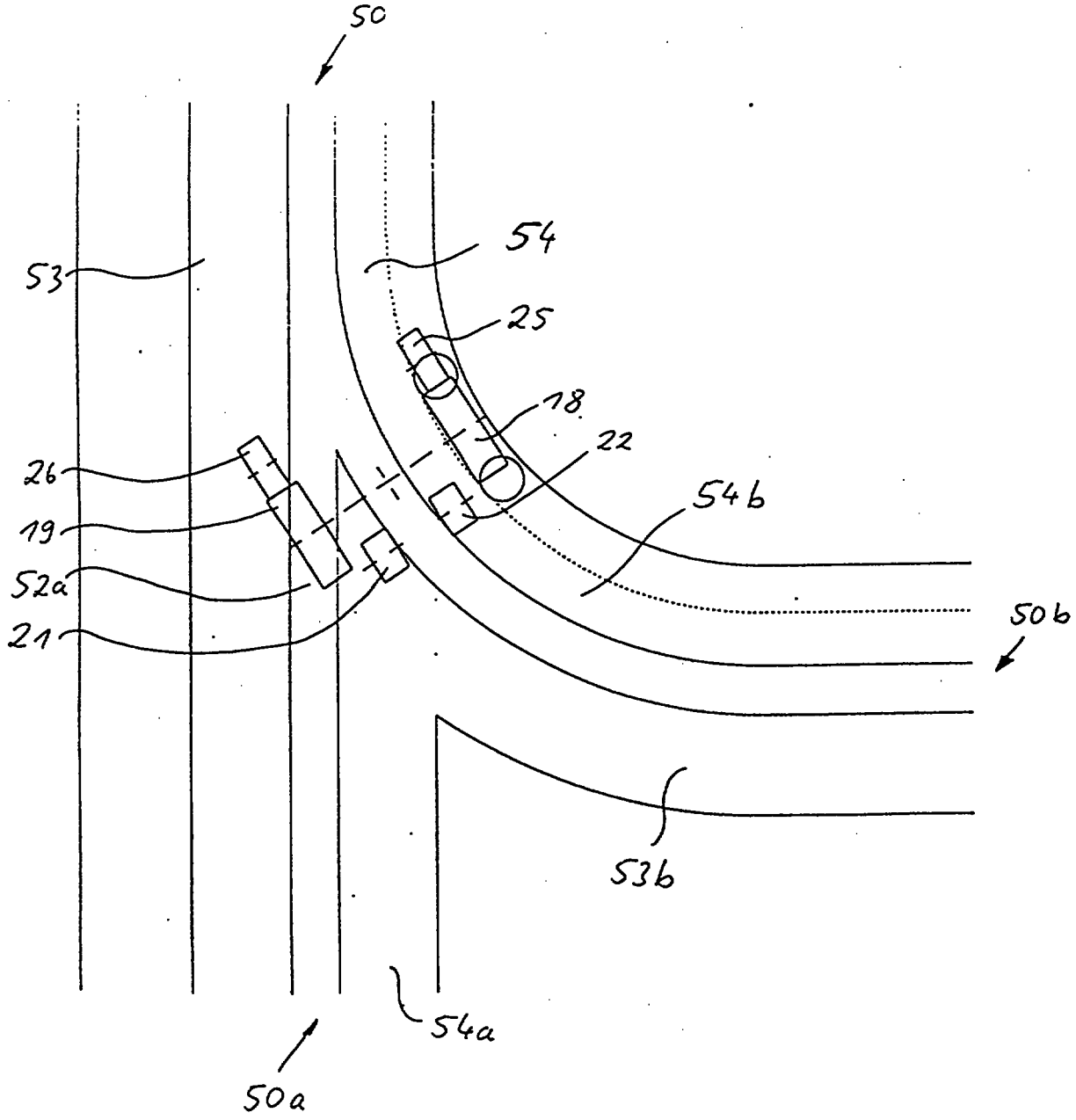

Fig. 4c

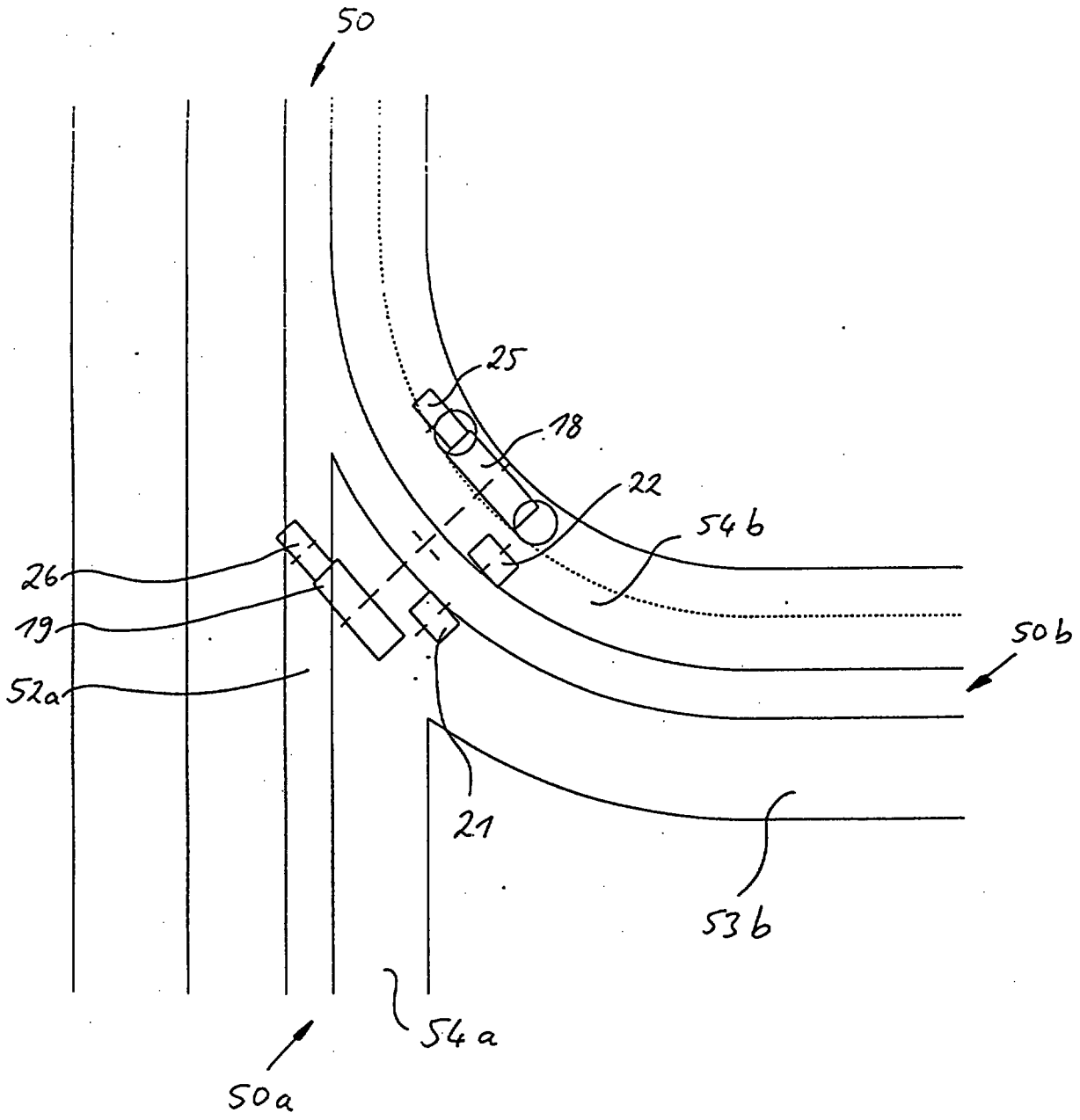

Fig. 4d

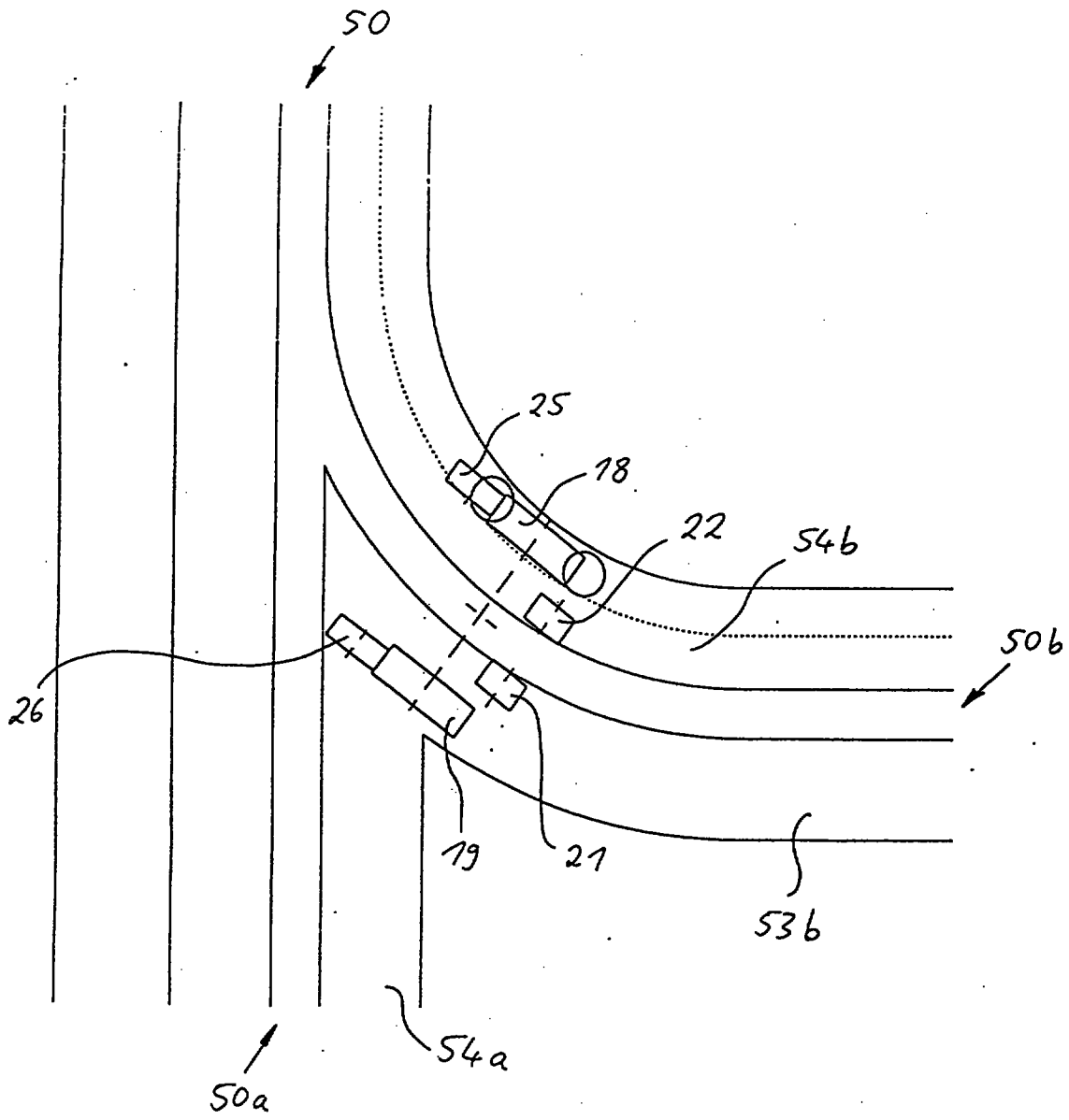

Fig. 4e

REPLACEMENT SHEETS SG
☑ Description : paged 1. to paged 10
☑ Claim(s) : paged 11. to paged 12
☐ Drawing(s) : paged —. to paged —.
☐ Abstract : paged —. to paged —.

DATE OF RECEIPT 8-7-98

MOBILE PARTITION ELEMENT

The present invention relates to a mobile partition element with a partition element leaf and at least one roller-type carriage on which the partition element leaf is suspended by means of at least one load-bearing element extending through a longitudinal slot in the track and which comprises at least a first and second pair of roller disposed on either side of the longitudinal slot, characterized in that the distance between the outer sides of the second pair of rollers is smaller than the clearance between the inner sides of the roller of the first pair, and that the diameter of the rollers of the second pair is smaller than the diameter of the rollers of the first pair.

Such a mobile partition element is disclosed in US 5 090 171 representing the closest prior art from which the invention proceeds.

It is an object of the present invention to improve the roller-type carriage in such a way that branches in the track can be passed without any difficulty.

In order to achieve the above object and further objects, according to the present invention, there is provided a mobile partition element with a partition element leaf and at least one roller-type carriage on which the partition element leaf is suspended by means of at least one load-bearing element extending through a longitudinal slot in the track and which comprises at least a first and second pair of rollers disposed on either side of the longitudinal slot, wherein the second pair of rollers, viewed in a first rolling direction of the roller-type carriage, lies in front of the first pair of rollers and the arrangement of the rollers of the roller-type carriage are so selected that during the passing of a branch in the track at least one roller is always supported on one of the rolling surfaces on either side of the longitudinal slot, characterized in that the distance between the outer sides of the second pair of rollers is smaller than the clearance between the inner sides of the roller of the first pair, and that the diameter of the rollers of the second pairs is smaller than the diameter of the rollers of the first pair.

The structure according to the invention, which moreover can also be installed without major sophistication and hence at low cost, makes its possible in a simple but effective manner to prevent the rollers of the roller-type carriage, when they cross over the longitudinal slot in a branch in the track, from dropping into the section of track to be crossed and remaining stuck there. The invention thus permits a smooth passing of the branch in a track. In this way the load-bearing function of the roller-type carriage is always guaranteed at any point in the track, including in the area of branches, so that the partition element is always kept at the same height.

Preferably the rollers of each pair are with expediency arranged symmetrically with respect to the longitudinal slot. The clearance between the rollers of the second pair should correspond to the width of the longitudinal slot. The gap between the rollers of the first pair should preferably be so proportioned that the rollers of the first pair run essentially along the outer sides of the rolling surfaces of the track. This currently particularly preferred embodiment makes it possible in particular for a curved track section of a branch to be negotiated problem-free with crossing of the longitudinal slot of the other track section.

A further preferred embodiment is distinguished by the fact that the roller-type carriage comprises a third pair of rollers disposed on either side of the longitudinal slot, which, viewed in the first rolling direction of the roller-type carriage, lie behind the first pair of rollers. The gap between the rollers of the third pair should correspond essentially to the gap between the rollers of the first pair, wherein with expediency the gap between the rollers of the third pair should be so proportioned that they run essentially along the outer side of the rolling surfaces. The arrangement of a third pair of rollers enables the operational stability of the roller-type carriage to be further increased, in particular during the passing of branches.

The diameter of the rollers of the third pair can be smaller than the diameter of the rollers of the first pair for the reasons already mentioned above. In addition the diameter of

REPLACEMENT SHEET
08 JUL 1998

the rollers of the third pair can correspond roughly to the diameter of the rollers of the second pair.

If the first pair of rollers assume essentially the load-bearing function, the load-bearing element should intersect a line connecting the centres of rotation of the rollers of the first pair of rollers. In this way not only does the greatest loading take place on the rollers of the first pair of rollers, but particularly stable and balanced operating characteristics of the roller-type carriage are also achieved. In a preferred development of this embodiment the rollers of each pair of rollers can lie on a common axis of rotation, wherein the axis of rotation of each pair of rollers should lie parallel to one another.

With expediency the roller-type carriage can be provided with at least one lateral guide roller whose axis stands vertically and which touches a side wall of the track, by means of which an exact guiding of the roller-type carriage along the track and in particular during the passing of branches can be achieved.

A preferred embodiment of the invention will be explained in detail below by means of the attached drawings, where

Figure 1	shows a diagrammatic side view of a partition element,
Figures 2a and b	show two different perspective views of a roller-type carriage,
Figures 3a, b and c	show a front view, a side view and a top view of the roller-type carriage and

REPLACEMENT SHEET
08 JUL 1998

Figures 4a to c — show diagrammatically the negotiation of a fork of a track with the aid of the roller-type carriage according to the invention.

The partition element 1 shown diagrammatically in Figure 1 incorporates a partition element leaf 2 which consists conventionally of a metal frame and two cover plates fixed to the latter on either side. On the top side 4 of the partition element leaf 2 are fixed mounting bolts 6 which are pivotable on roller-type carriages 10 to be described in greater detail below. The roller-type carriages 10 run on running surfaces of a track 50 also to be described in greater detail below, which has a central slot running in longitudinal direction through which the mounting bolts 6 are passed, wherein the rolling surfaces of the track 50 are provided on either side of the central slot. Each partition element conventionally comprises two roller-type carriages 10 each with a mounting bolt 6 pivotable thereon.

A roller-type carriage 10 is shown in detail in Figures 2 and 3. The roller-type carriage 10 comprises a basic unit 12 which is provided with a continuous bore 14 for the pivoting of the mounting bolt 6. A first roller 18 and 19 is pivotable on the two sides 16 and 17 respectively of the basic unit 12. The rollers 18 and 19, which preferably run in ball bearings or form the outer race of a ball bearing (see in this connection in particular Figure 3b), lie on a common axis and form a first pair of rollers. The bore 14 for the pivoting of the mounting bolt 6 is moreover so disposed that its axis intersects essentially at right angles the common axis of the first pair of rollers, as a result of which the loads are assumed essentially by the first track rollers 18, 19. Considered in the viewing direction of Figure 2a, there are disposed in the area of the front end 20 of the basic unit 12 in front of the first track rollers 18 and 19 two second track rollers 21 and 22 with a gap between them. The track rollers

REP:
08 JUL 1998

21 and 22, which preferably also run in ball bearings or form the outer race of a ball bearing, are moreover disposed for the most part recessed in the basic unit 12, wherein they stand with their periphery slightly proud of the front end 20 of the basic unit 12 and protrude out of its underside 23. The track rollers 21 and 22 lie on a common axis and form a second pair of rollers. Adjacent to the rear end 24 of the basic unit 12 and behind the first track rollers 18 and 19 in the viewing direction of Figure 2a there are pivoted on both the sides 16 and 17 respectively of the basic unit 12 a third track roller 25 and 26, which also preferably runs in ball bearings or consists of the outer race of a ball bearing (see Figure 3b). The two track rollers 25 and 26 lie on a common axis and form a third pair of rollers.

Since the loads are assumed essentially by the first track rollers 18, 19, the diameter of the latter are visibly greater than that of the second and third track rollers 21, 22 and 25, 26, which have essentially the same diameter. The gap between the track rollers 25 and 26 of the third pair of rollers is roughly equal to the gap between the track rollers 18 and 19 of the first pair of rollers, while the gap between the track rollers 21 and 22 of the second pair of rollers is smaller. The distance between the outer sides of the track rollers 21 and 22, namely the sides facing the sides 16, 17 of the basic unit 12, is slightly smaller than the clearance between the inner sides of the first track rollers 18 and 19, namely the sides facing the basic unit 12.

As Figures 2 and 3 likewise make clear, the track rollers of each pair of rollers are disposed symmetrically relative to a notional centre line running in the direction of travel, which is also intersected by the axis of the continuous bore 14 for the rotatable accommodation of the mounting bolt. Not only the second track rollers 21 and 22, but also the first track rollers 18 and 19 together with the third track rollers 25 and 26, protrude with their periphery slightly beyond the

REPLACEMENT SHEET
08 JUL 1998

underside 23 of the basic unit 12. Moreover the axes of these track rollers are each, as a function of their diameter, disposed at such a height that the track rollers lie with the underside of their periphery on a common plane which is formed by the rolling surface of the track described below.

On the top side 28 of the basic unit 12 there are pivotable adjacent to the one side 17 two guide rollers 29 and 30 with a gap between them such that their axes stand essentially vertically and lie at right angles to the horizontally lying axes of the track rollers 18, 19, 21, 22, 25 and 26. The guide rollers 29 and 30 run in a guide groove provided in the track, as a result of which the roller-type carriage is guided precisely into the desired direction of a branch.

Figure 4 shows diagrammatically in top view a section of a track 50 with a fork 60. There is furthermore indicated the position of the track rollers 18, 19, 21, 22, 25 and 26 and of the guide rollers 29, 30 of a roller-type carriage 10 of the kind described above displaceable along the track 50, wherein on grounds of simplicity only the track rollers and guide rollers are shown diagrammatically, while the remaining parts of the roller-type carriage described above are omitted. It should also be mentioned in this connection that the guide rollers 29, 30 are disposed on the opposite side 16 of the basic unit 12 compared with the views in Figures 2 and 3. It can be seen from this that the arrangement of the guide rollers 29, 30 is not limited to one of the two sides 16, 17 of the basic unit 12; instead the arrangement of the guide rollers 29, 30 is determined by the question on which side of the track 50 a guide groove 55 is provided with which the guide rollers 29, 30 engage and which is discussed in greater detail below.

As can be seen from Figure 4a, the track 50 shows a central slot 52 running along its centre line in longitudinal direction, through which the mounting bolt 6 (cf. Figure 1)

REPLACEMENT SHEET
08 JUL 1998

extends, and plane horizontal rolling surfaces 53 and 54, formed on either side of the central slot 52, on which the track rollers 18, 19, 21, 22, 25 and 26 are supported. The rolling surfaces 53 and 54 are each bounded outwardly by side walls 51.

In Figure 4a there can be discerned the gaps, selected with the roller-type carriage 10 constructed as described before, between the track rollers of each roller pair in relation to the dimensions of the track 50. The essentially identical gap between the track rollers 18, 19 of the first track roller pair and the track rollers 25, 26 of the third track roller pair is selected so that the track rollers 18, 19, 25 and 26 run adjacent to the side walls 51 bordering the rolling surfaces 53, 54; the gap between the outer sides of the track rollers 18, 25 on the one hand and the track rollers 19, 26 on the other and hence the width of the first and third track roller pairs therefore corresponds roughly to the width of the track 50, but is slightly narrower. Conversely the clearance between the inner sides of the track rollers 21, 22 of the second track roller pair corresponds to the width of the central slot 52, so that these two track rollers 21, 22 run on either side of the central slot 52 directly along the latter.

The section, which is shown in Figure 4a of the track 50 contains a branch 60, whereby the track 50 is divided into a first section 50a continuing in a straight line and a curved forking second section 50b. Consequently the first rolling surface 53 merges with the rolling surface 53a of the first track section 50a, while the second rolling surface 54 merges with the rolling surface 54b of the second track section 50b. With the fork 60 the central slot 52 also divides into the central slot 52a of the first track section 50a and the central slot 52b of the second track section 50b. Consequently there is formed in the first track section 50a a new second rolling surface 54a, which lines up with the second rolling surface 54, but is separated from the latter by the central

REPLACEMENT SHEET
08 JUL 1998

slot 52b, branching off from the central slot 52, of the second track section 50b. There is furthermore formed by the branch 58 in the second track section 50b a new first rolling surface 53b, which has together with the second rolling surface 54a of the first track section 50a a common origin in the area of the fork 60, but is disconnected from the first rolling surface 53 by the central slot 52a of the first track section 50a and borders opposite the second rolling surface 54b the other side of the central slot 52b of the second track section 50b.

In the embodiment shown in Figure 4a there is provided in the area of the second rolling surface 54, which merges with the second rolling surface 54b of the branching second track section 50b, a guide groove 56 which follows the curved shape of the branching second track section 50b. The guide groove 56 is disposed above the rolling surface 54 or 54b (for example on the top side of a hollow section forming the track 50) and is bordered by two side walls 57 and 58 between which the guide rollers 29 and 30 of the roller-type carriage run. The described course of the guide groove 66 produces in the embodiment shown a compulsory guiding of the roller-type carriage from the track 50 through the fork 56 into the branching second track section 50b. A guide groove can naturally also be provided in the area of the first rolling surface 53 of the track 50 and of the adjoining first rolling surface 53a of the track 50 of the first track section 50a continuing in a straight line, so that roller-type carriages are necessarily moved, together with guide rollers directed in such a guide groove, through the branch 56 straight on into the first track section 50a.

In the following Figures 4b to 4e it is shown diagrammatically how the roller-type carriage described before is moved through the branch 56 into the forking curve-shaped second track section 50b. On grounds of simplicity only the most important reference symbols are given in these figures.

08 JUL 1998

Over the whole of the movement path shown the first to third track rollers 18, 22 and 25 have permanent contact with the second rolling surface 54 of the track 50 and with the adjoining second rolling surface 54b of the branched second track section 50b.

In the position shown in Figure 4b, in which the roller-type carriage is entering the branch the second track roller 21 is crossing the central slot 52a of the first track section 50a and is therefore hanging "in the air". An undesirable tilting of the roller-type carriage is nevertheless prevented, but the roller-type carriage remains in its horizontal position, since the first track roller 19 and the third track roller 26 are still supported on the first rolling surface 53 of the track 50 and hence ensure together with the opposite track rollers 18, 22 and 25 a reliable support of the roller-type carriage. The latter is also supported by the fact that the bore 14 (see Figures 2 and 3), which rotatably accommodates the mounting bolt 6 (see Figure 1) through which the entire load transfer takes place, intersects vertically with its axis the axis of the first track roller pair 18, 19, as a result of which practically the whole of the load is absorbed by the first track rollers 18, 19.

In the position shown in Figure 4c, although the first track roller 19 crosses the central slot 52a of the first track section 50a, the roller-type carriage is nevertheless also supported, in addition to the track rollers 18, 22 and 25 supported on the opposite second rolling surface 54 or 54b, by the preceding second track roller 21, which is already supported on the first rolling surface 53 of the branching second track section 50b, as well as by the lagging third track roller 26, which is still supported on the first rolling surface 53 of the track 50.

In the situation shown in Figure 4d the roller-type carriage has been moved forward into the branching second track section

50b to a sufficient extent that the first track roller 18 and the second track roller 21 are now already supported on the first rolling surface 53b of the second track section 50b, while the lagging third track roller 26 is suspended above the central slot 52a to be crossed of the first track section 50a.

In the situation shown in Figure 4a the roller-type carriage has now been moved forward completely into the branched second track section 50b, so that now all the track rollers 18, 19, 21, 22, 25 and 26 are supported on the rolling surfaces 53b and 54b of the second track section 50b and the roller-type carriage can now be moved further along this second track section 50b.

As has already been explained before with reference to Figure 4a, because of the described layout of the track rollers the roller-type carriage can be moved through a branch problem-free without it falling together with a track roller into a central slot which it has to cross and sticking there.

* C L M S *

REPLACEMENT SHEET
08 JUL 1998

CLAIMS

1. Mobile partition element with a partition element leaf and at least one roller-type carriage on which the partition element leaf is suspended by means of at least one load-bearing element extending through a longitudinal slot in the track and which comprises at least a first and a second pair of rollers disposed on either side of the longitudinal slot, wherein the second pair of rollers, viewed in a first rolling direction of the roller-type carriage, lies in front of the first pair of rollers and the arrangement of the rollers of the roller-type carriage are so selected that during the passing of a branch in the track at least one roller is always supported on one of the rolling surfaces on either side of the longitudinal slot, characterized in that the distance between the outer sides of the second pair of rollers is smaller than the clearance between the inner sides of the roller of the first pair, and that the diameter of the rollers of the second pair is smaller than the diameter of the rollers of the first pair.

2. Mobile partition element according to claim 1, characterised in that the clearance between the rollers of the second pair corresponds to the width of the longitudinal slot.

3. Mobile partition element according to claim 1 or 2, characterised in that the gap between the rollers of the first pair is so proportioned that they run essentially along the outer sides of the rolling surfaces of the track.

4. Mobile partition element according to at least one of claims 1 to 3, characterised in that the roller-type carriage comprises a third pair of rollers disposed on either side of the longitudinal slot, which, viewed in the first rolling direction of the roller-type carriage, lie behind the first pair of rollers.

5. Mobile partition element according to claim 4, characterised in that the gap between the rollers of the third pair corresponds essentially to the gap between the rollers of the first pair.

* C L M S *

6. Mobile partition element according to claim 4 or 5, characterised in that the gap between the rollers of the third pair is proportioned so that they roll essentially along the outer sides of the rolling surfaces of the track.

7. Mobile partition element according to at least one of the claims 4 to 6, characterised in that the diameter of the rollers of the third pair is smaller than the diameter of the rollers of the first pair.

8. Mobile partition element according to claim 7, characterised in that the diameter of the rollers of the third pair corresponds roughly to the diameter of the rollers of the second pair.

9. Mobile partition element according to at least one of claims 1 to 8 characterized in that the rollers of each pair are arranged symmetrically relative to the longitudinal slot.

10. Mobile partition element according to at least one of claims 1 to 9, characterised in that the load-bearing element intersects a line connecting the points of rotation of the rollers of the first roller pair.

11. Mobile partition element according to at least one of claims 1 to 10, characterised in that the rollers of each roller pair lie in a common axis of rotation.

12. Mobile partition element according to claim 11, characterised in that the axes of rotation of each roller pair run parallel to one another.

13. Mobile partition element according to at least one of claims 1 to 12, characterised in that the roller-type carriage is provided with at least one lateral guide roller whose axis stands vertically and which touches a side wall formed on the track.

REPLACEMENT SHEET
08 JUL 1998