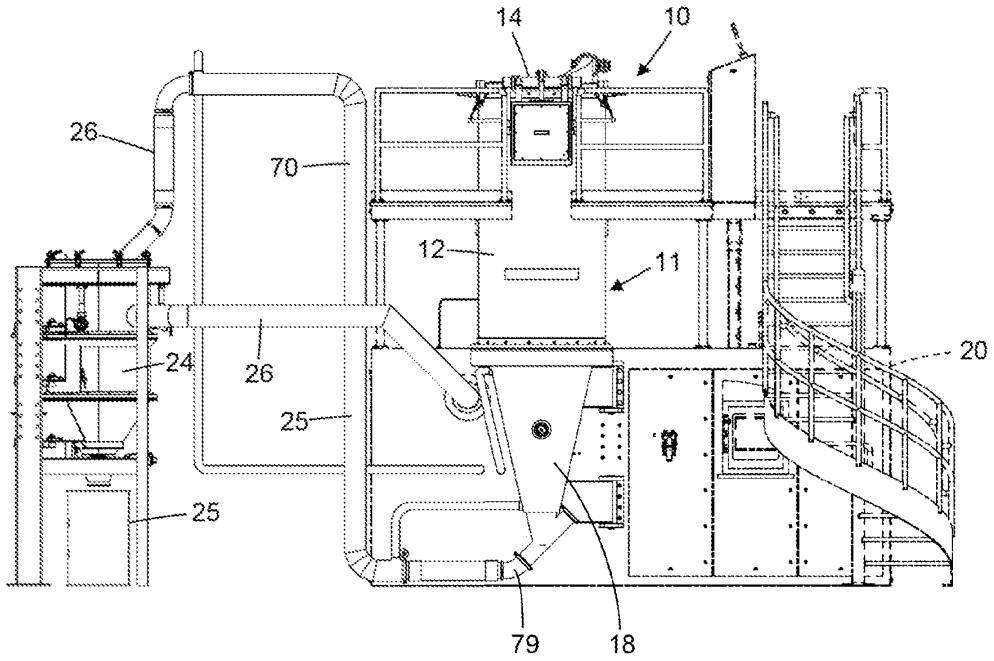

FIG. 1

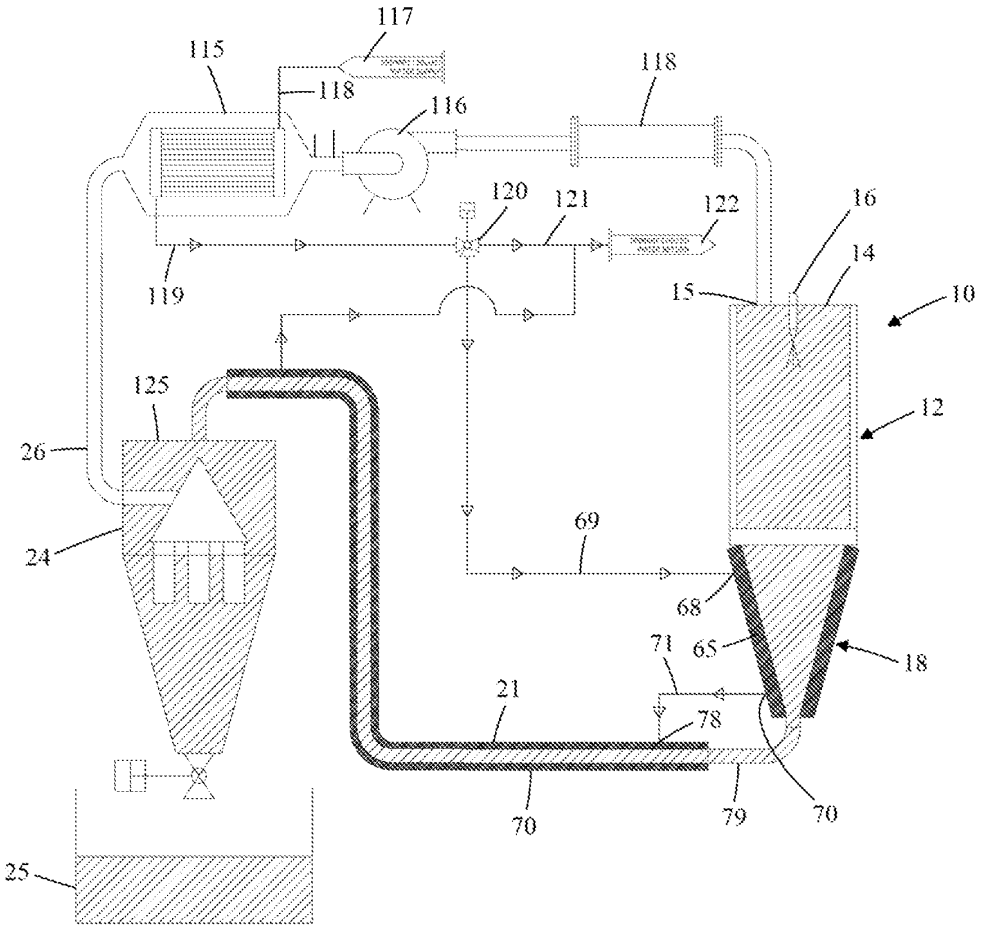
117
115
118
118
116
120
121
122
16
14
10
119
15
125
12
26
69
24
68
71
65
18
21
78
70
79
70
25

FIG. 2A

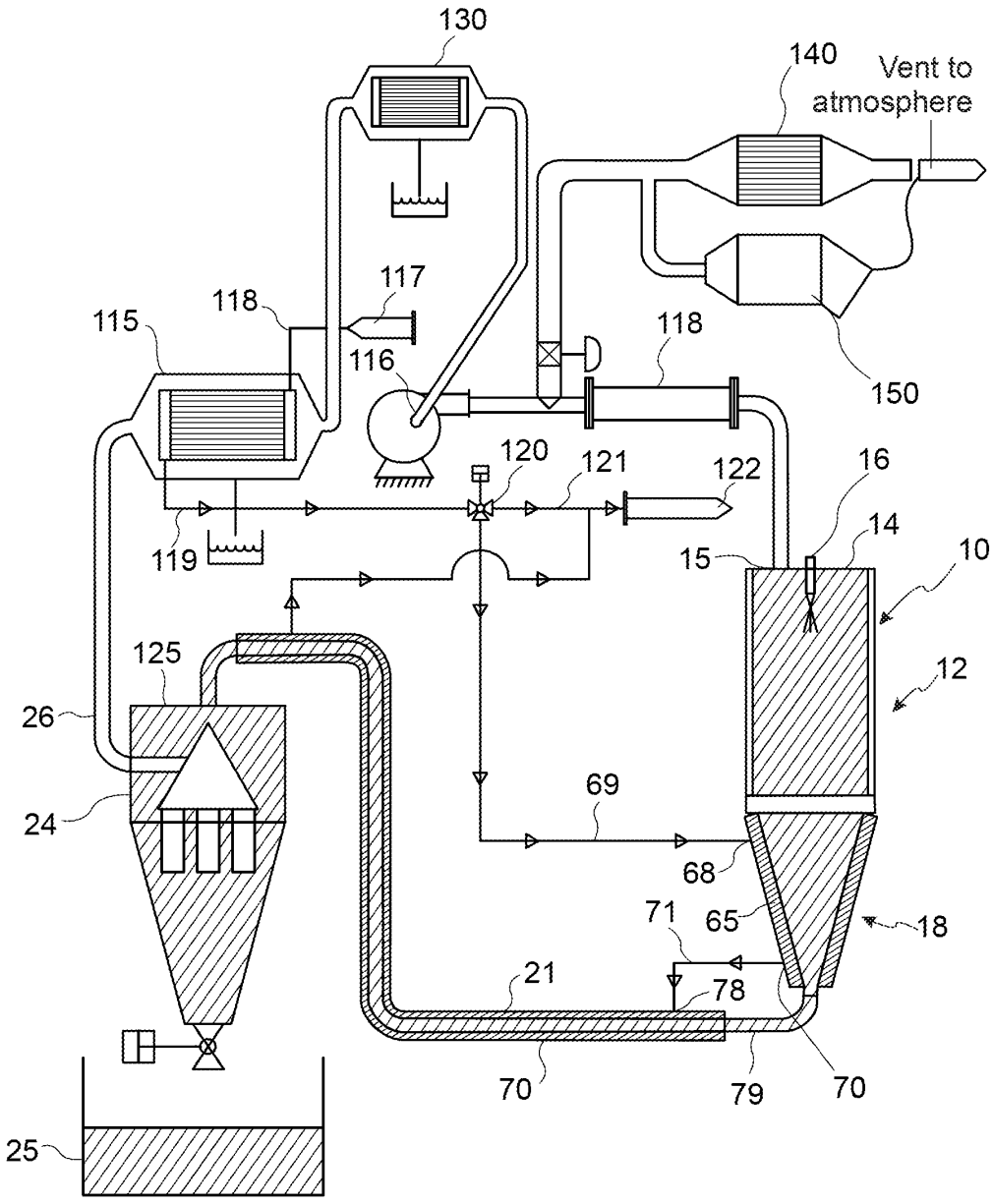
130
140
Vent to atmosphere
117
118
115
116
118
150
120
121
122
16
14
119
15
10
125
12
26
69
24
68
71
65
18
21
78
70
79
70
25

FIG. 2B

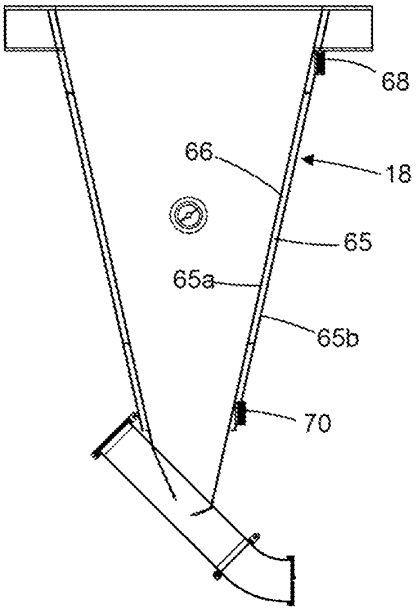

FIG. 3

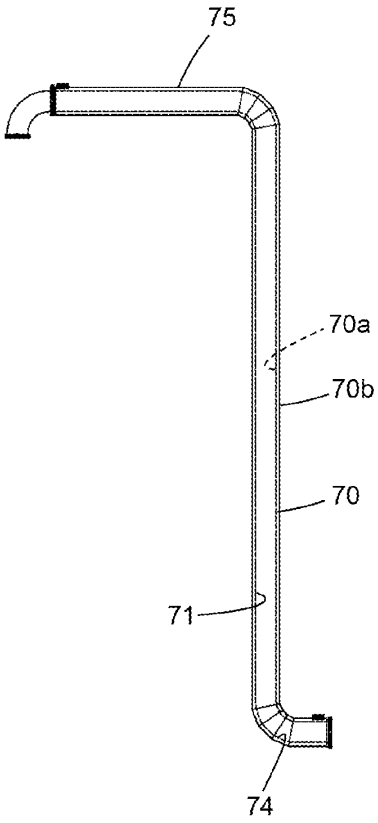

FIG. 4

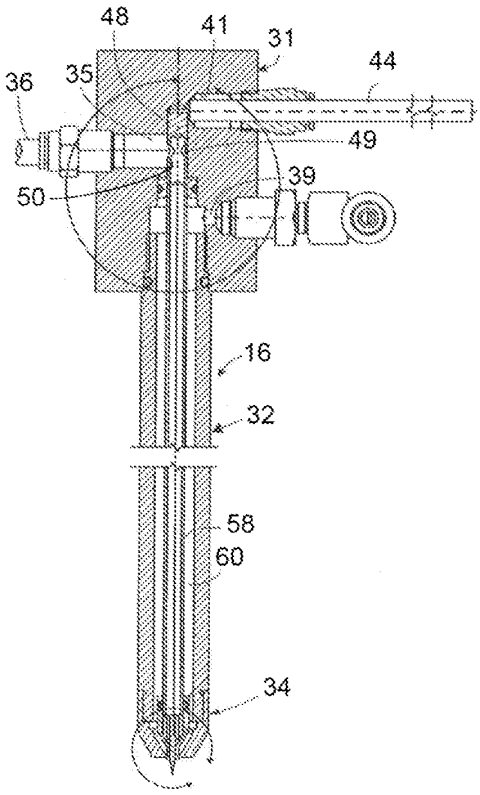
48
41
31
44
36
35
49
39
50
16
32
58
60
34

FIG. 5

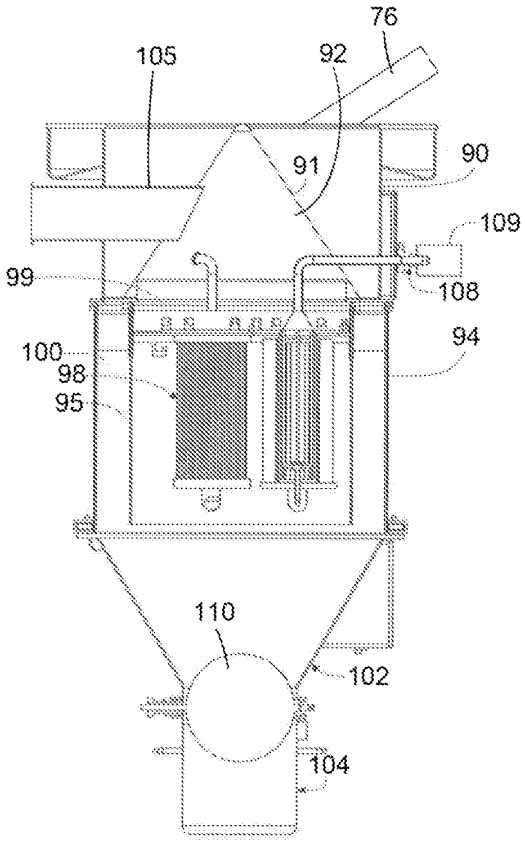
76
105
92
91
90
109
99
108
94
100
98
95
110
102
104

FIG. 6

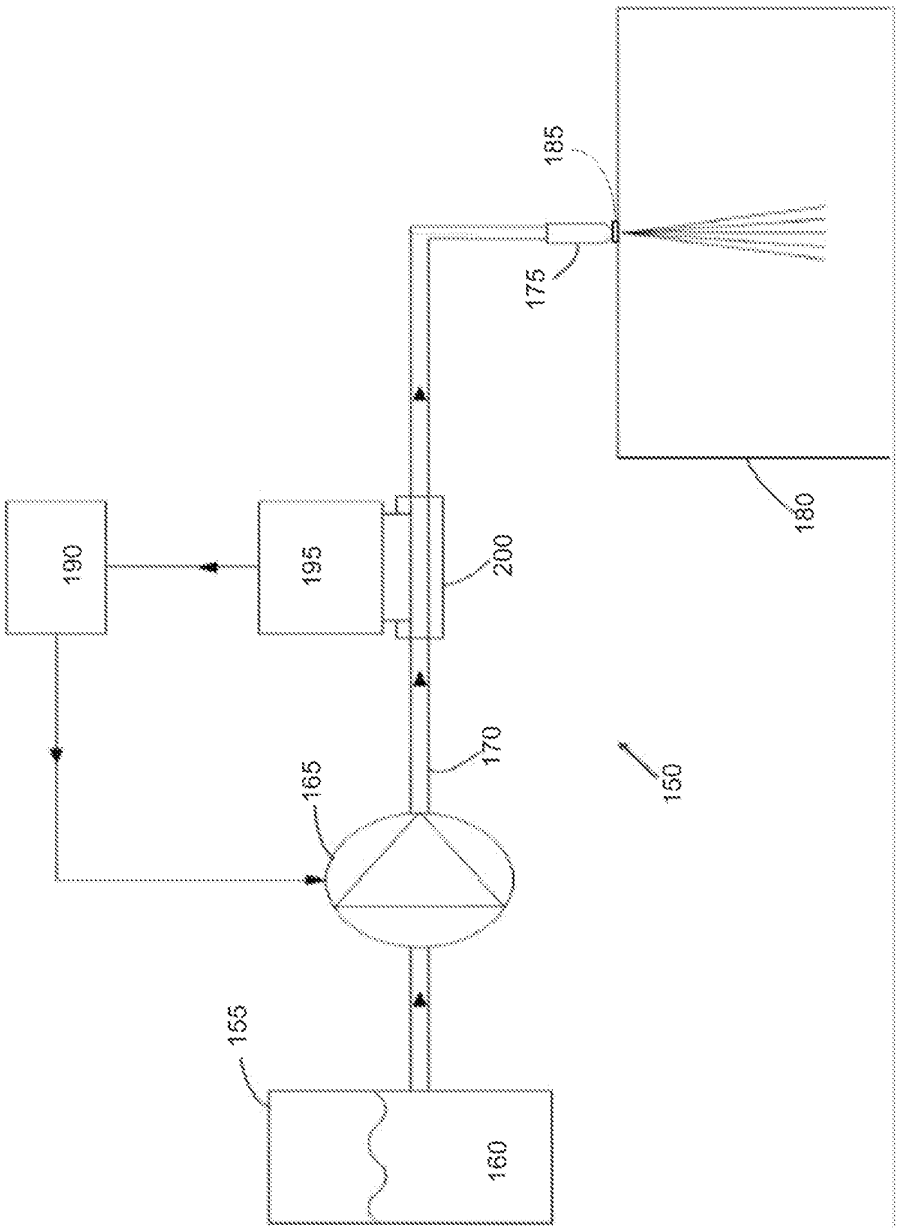

FIG. 7

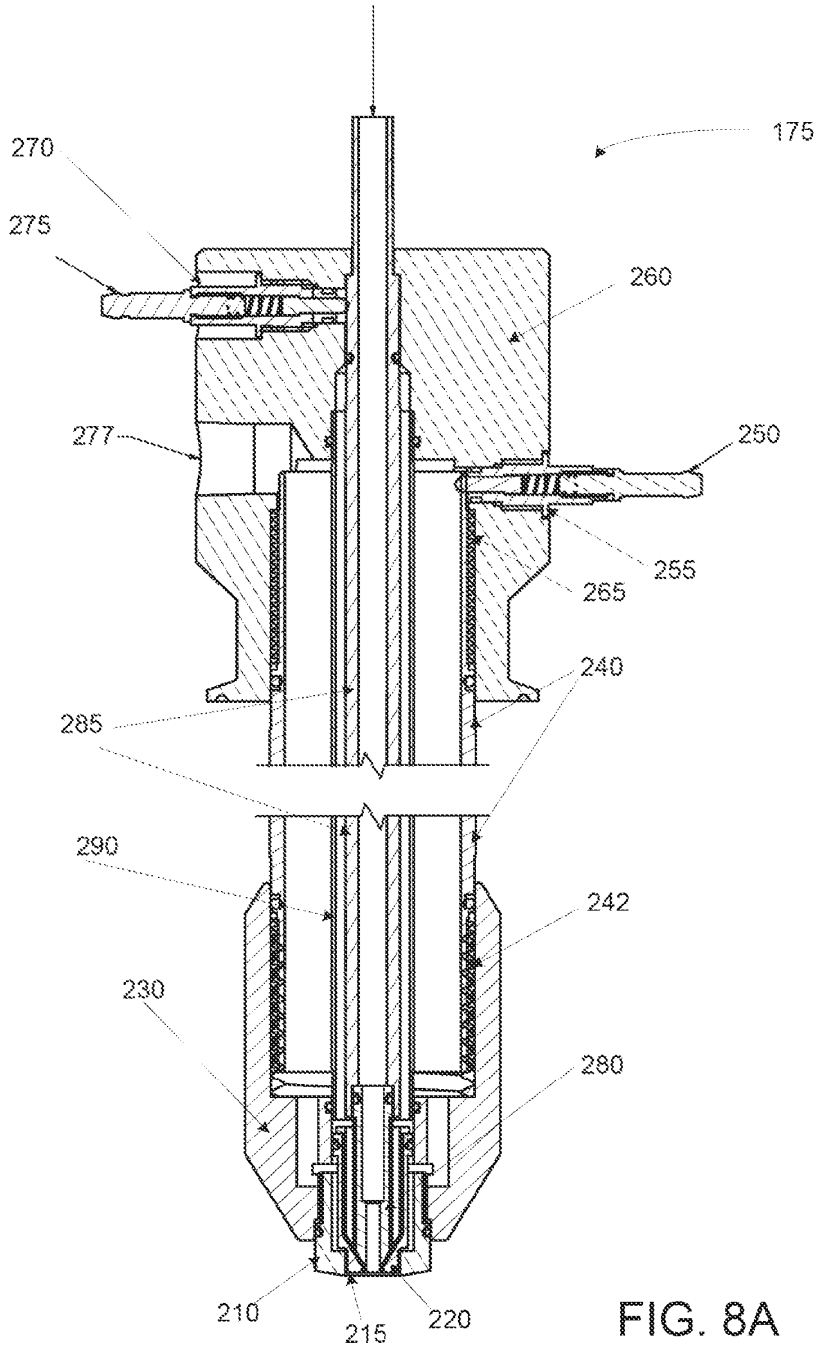
175
270
275
260
277
250
255
265
240
285
290
242
230
280
210
215
220

FIG. 8A

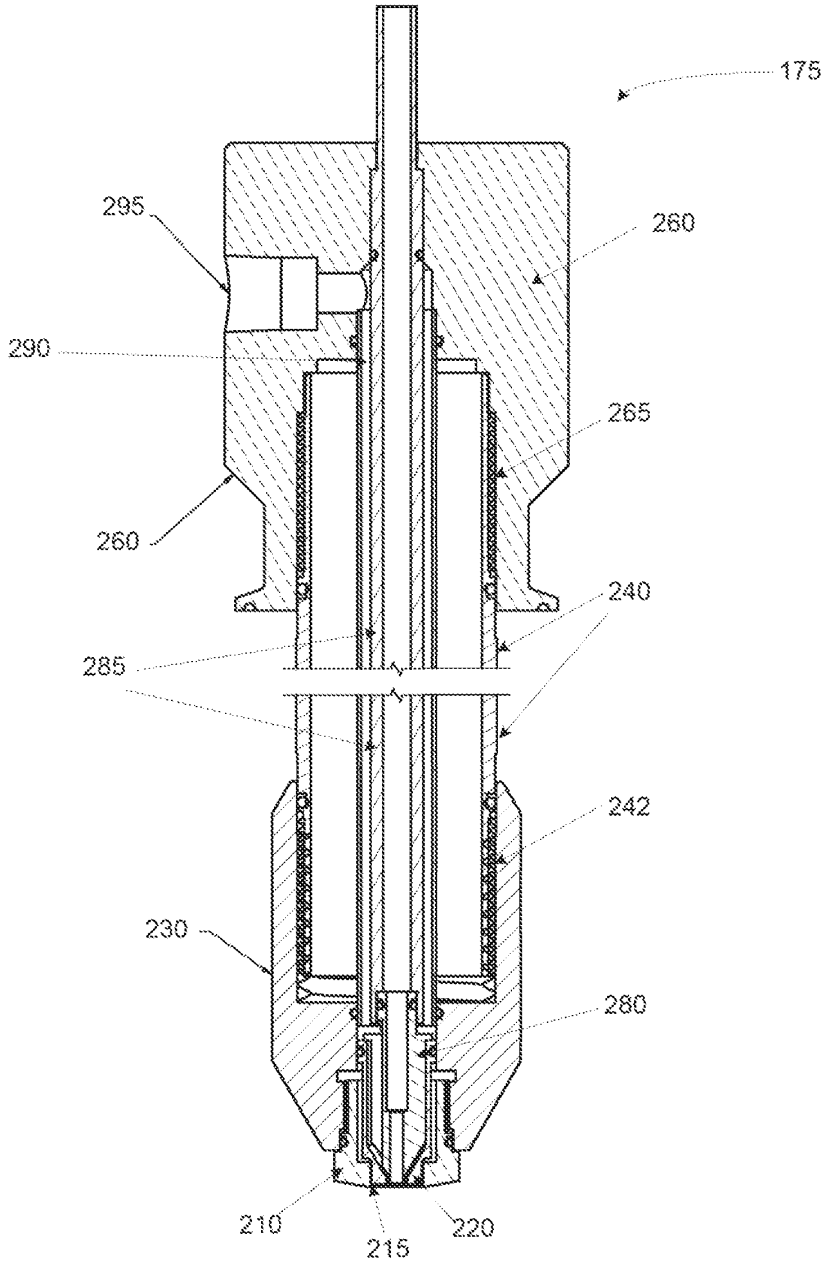

FIG. 8B

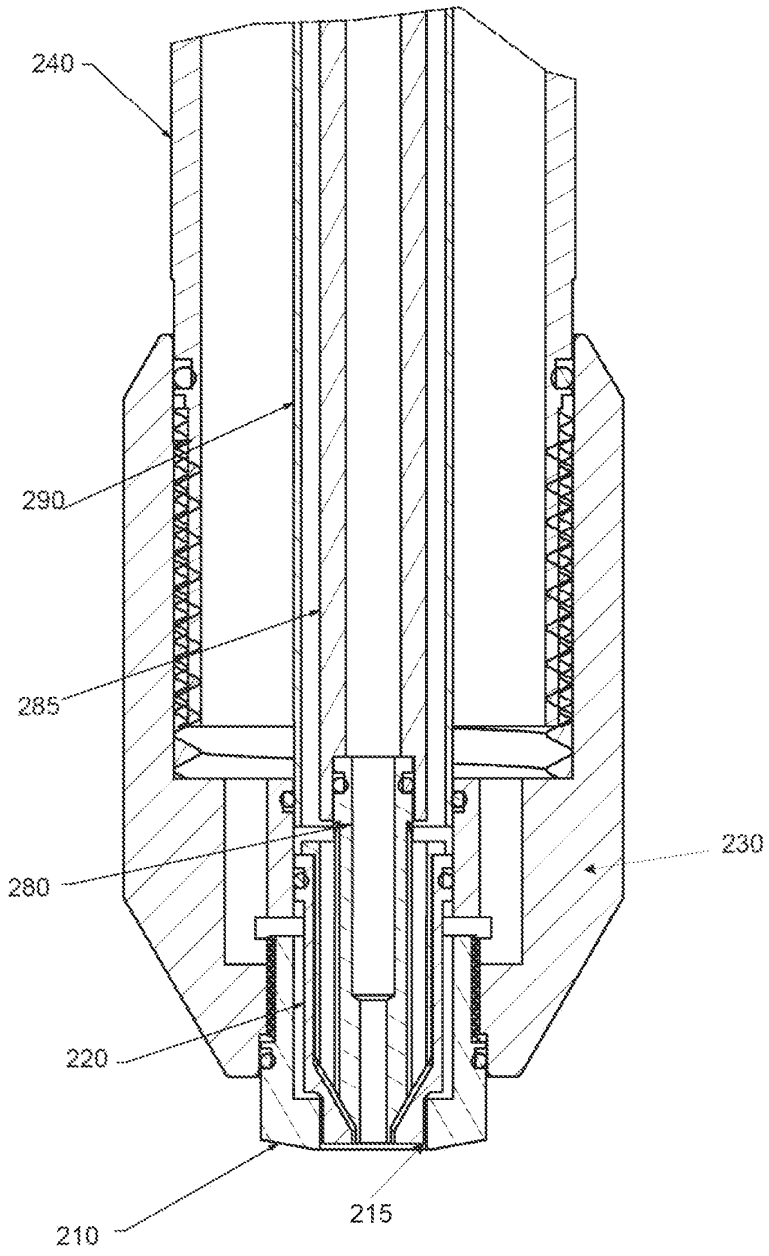

FIG. 9

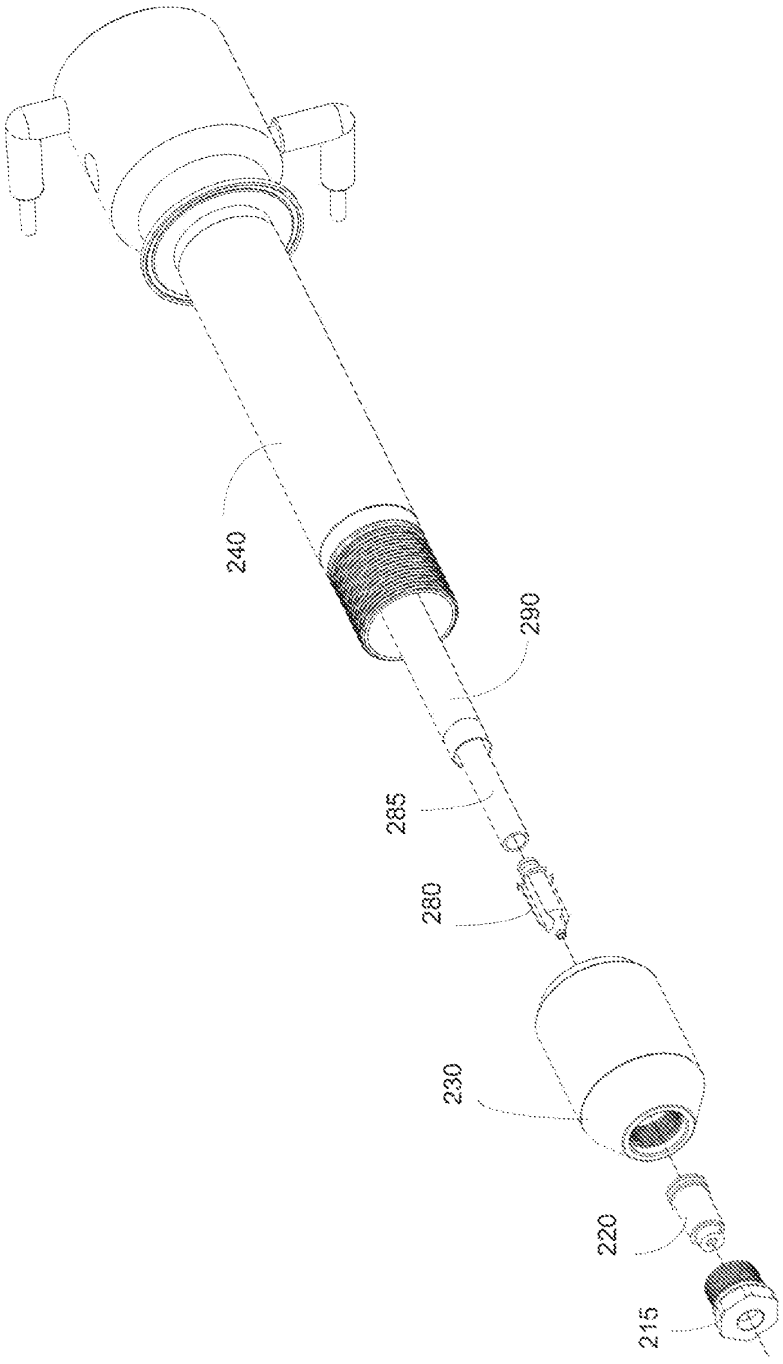

FIG. 10

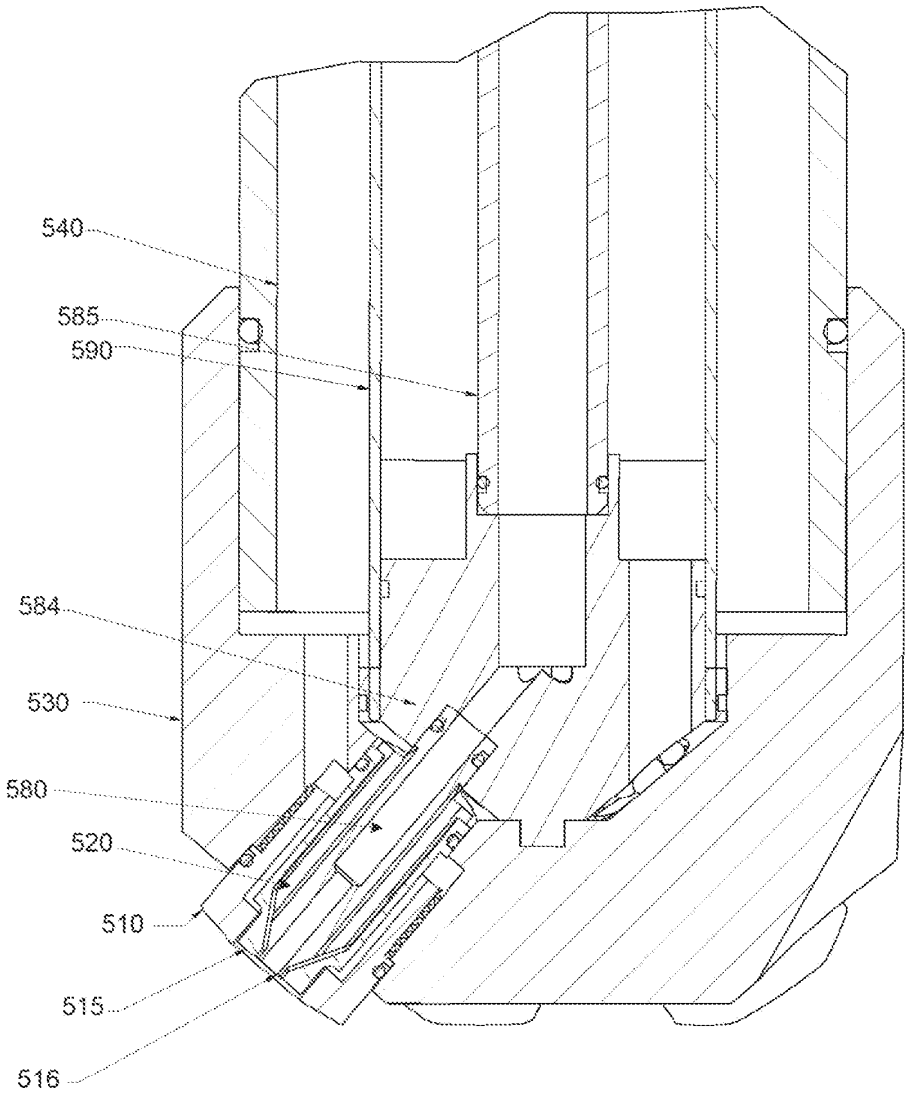

FIG. 11

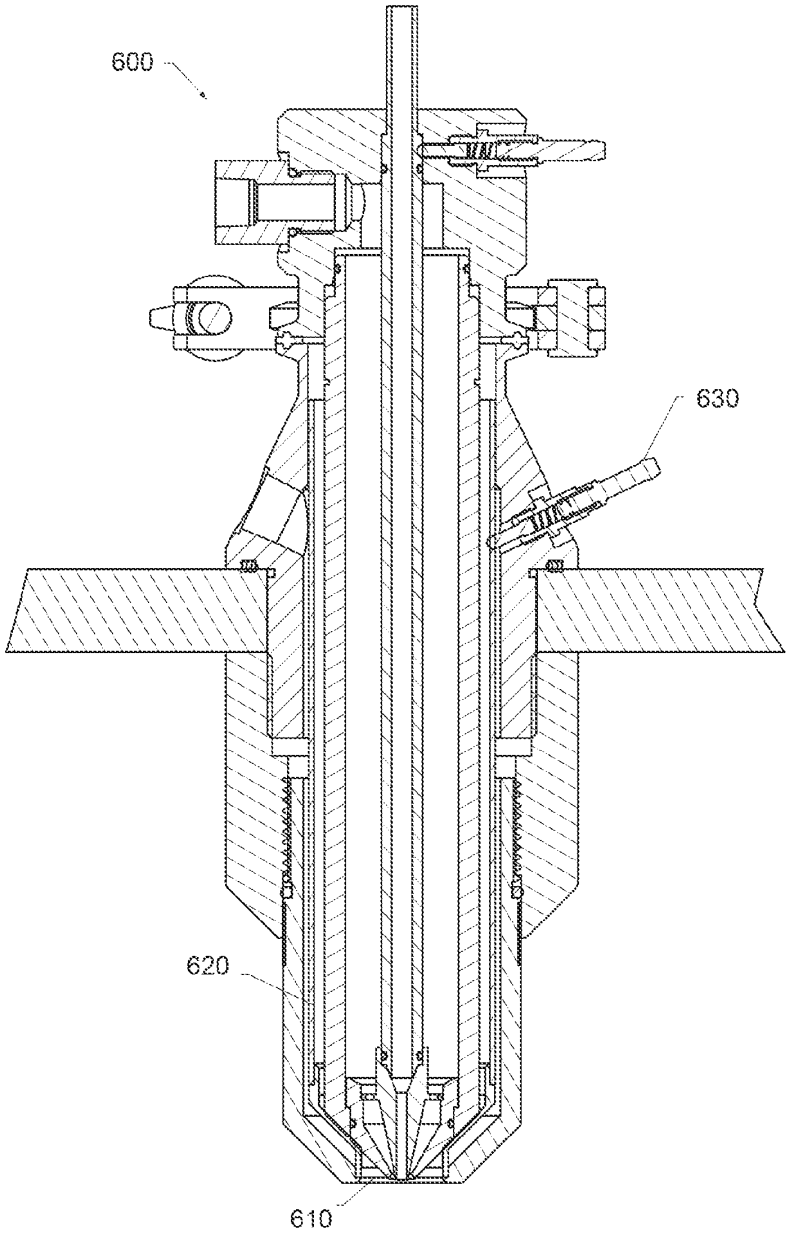

FIG. 12

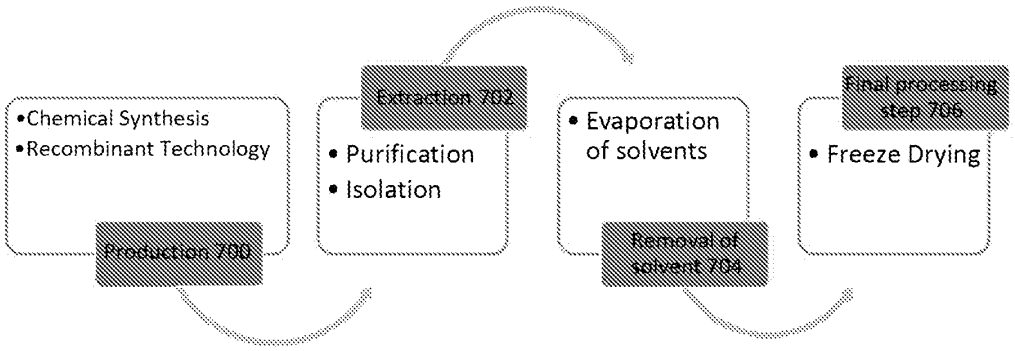

FIG. 13A

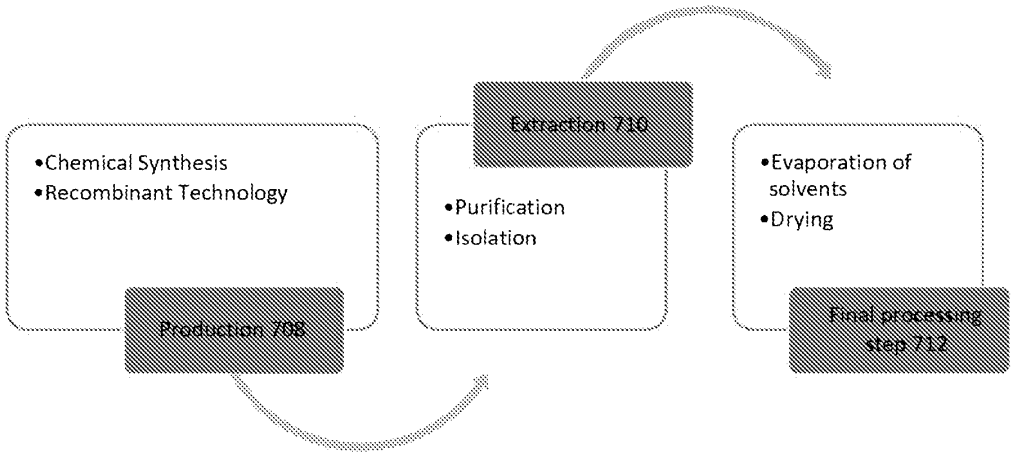

FIG. 13B

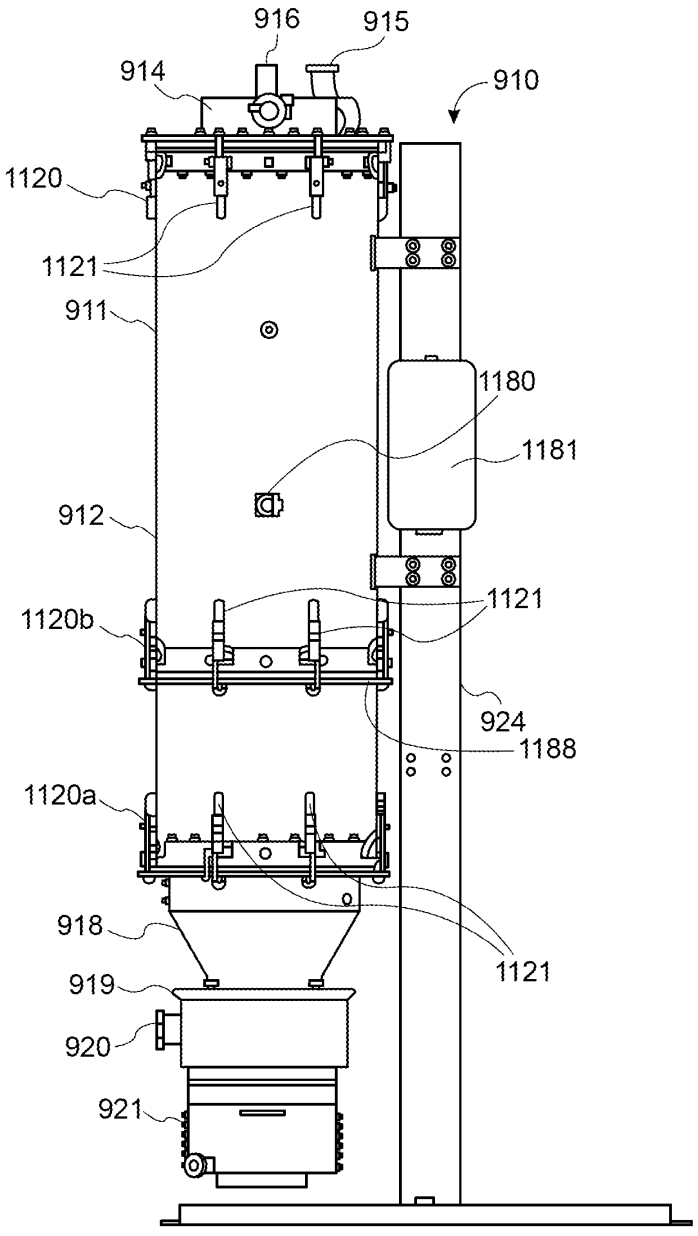
916
915
914
910
1120
1121
911
1180
1181
912
1121
1120b
924
1188
1120a
1121
918
919
920
921

FIG. 14

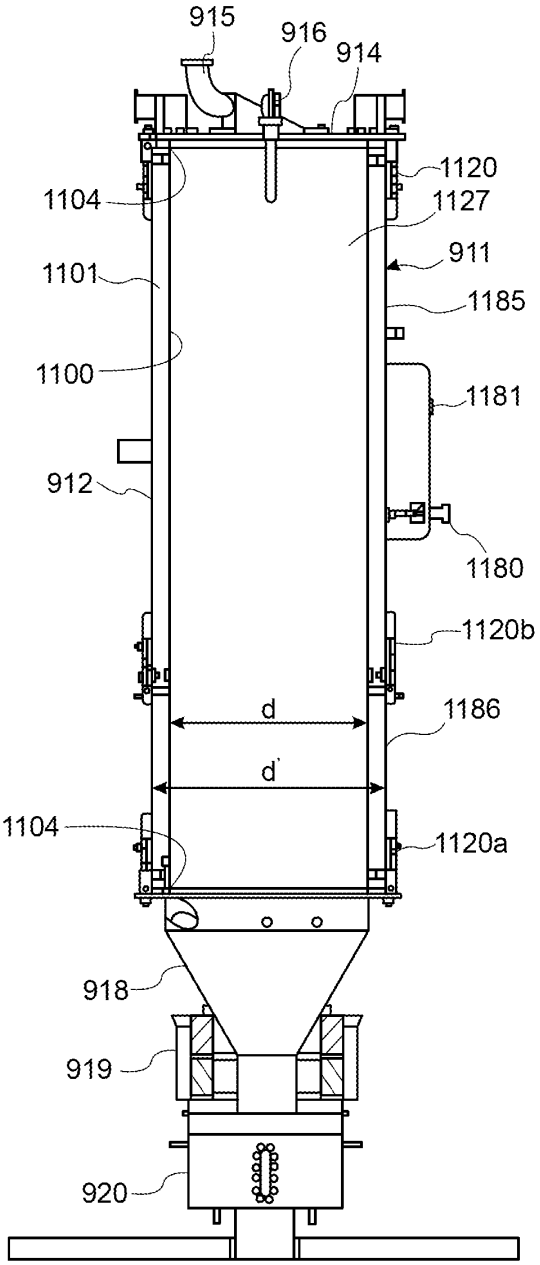
915
916
914
1120
1104
1127
911
1101
1185
1100
1181
912
1180
1120b
d
1186
d'
1104
1120a
918
919
920

FIG. 15

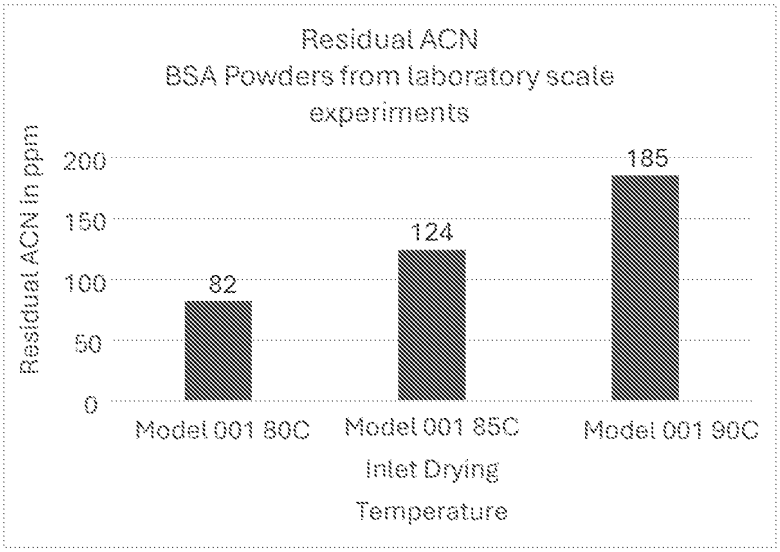
Residual ACN
BSA Powders from laboratory scale experiments
Residual ACN in ppm
200
150
100
50
0
82
124
185
Model 001 80C
Model 001 85C
Model 001 90C
Inlet Drying Temperature

FIG. 16

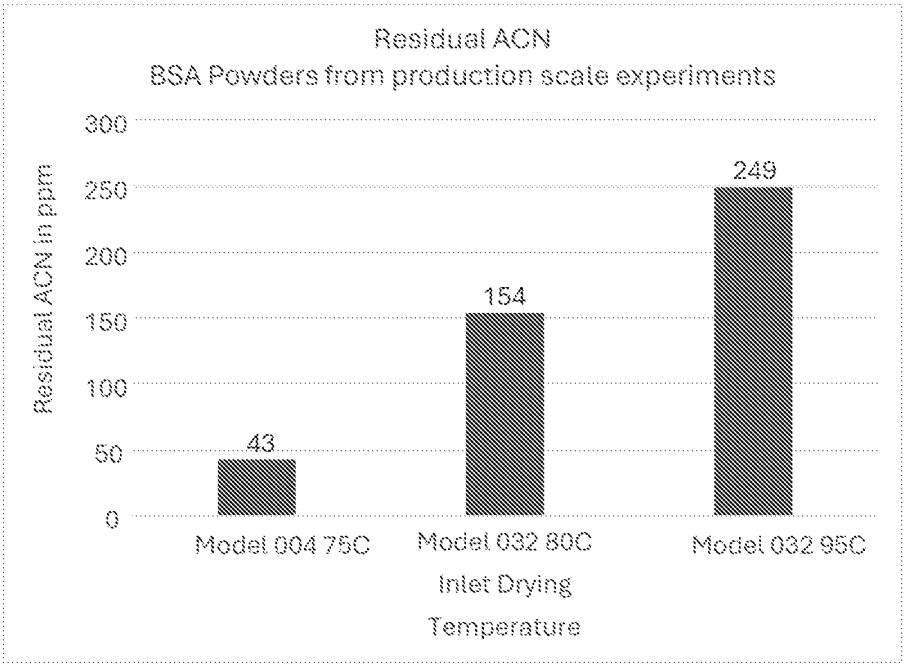
Residual ACN
BSA Powders from production scale experiments
Residual ACN in ppm
300
250
200
150
100
50
0
43
154
249
Model 004 75C
Model 032 80C
Model 032 95C
Inlet Drying
Temperature

FIG. 17