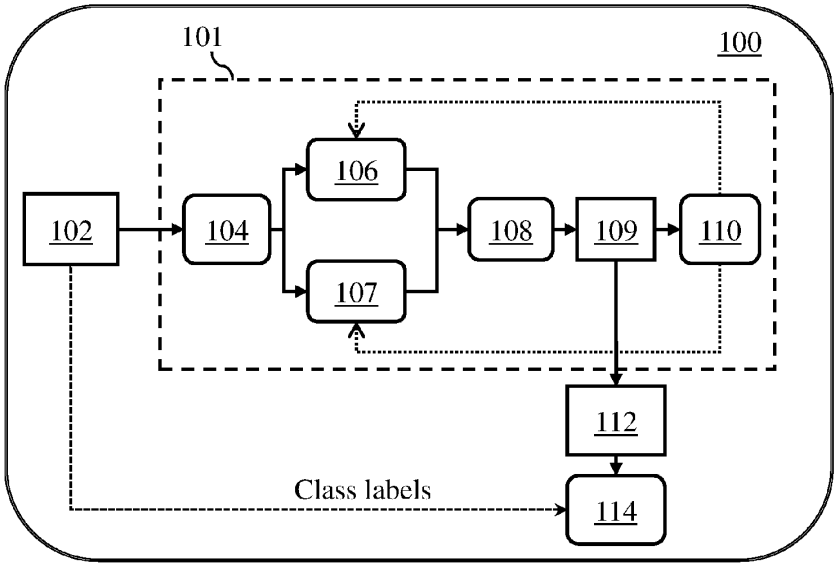

FIGURE 1

202 204 206

Task	Classes per Task				Category
Task 1	Class 1 400	Class 2 200	Class 3 10	Class 4 300	Single Defect
Task 2	Class 56 800	Class 22 700	Class 35 600	Class 14 300	Two Mixed
Task 3	Class 14 400	Class 18 200	Class 53 100	Class 41 300	Single Defect and Two Mixed
Task 4	Class 28 700	Class 32 800	Class 23 600	Class 44 300	Four Mixed
⋮	⋮	⋮	⋮	⋮	⋮

FIGURE 2

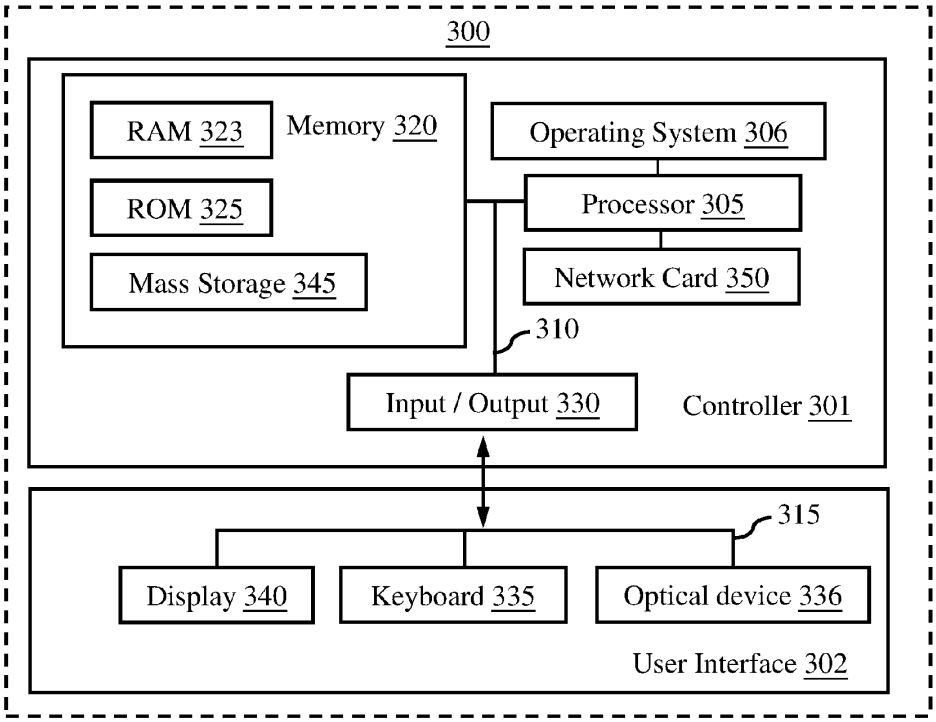
300
RAM 323
Memory 320
ROM 325
Mass Storage 345
Operating System 306
Processor 305
Network Card 350
310
Input / Output 330
Controller 301
315
Display 340
Keyboard 335
Optical device 336
User Interface 302

FIGURE 3

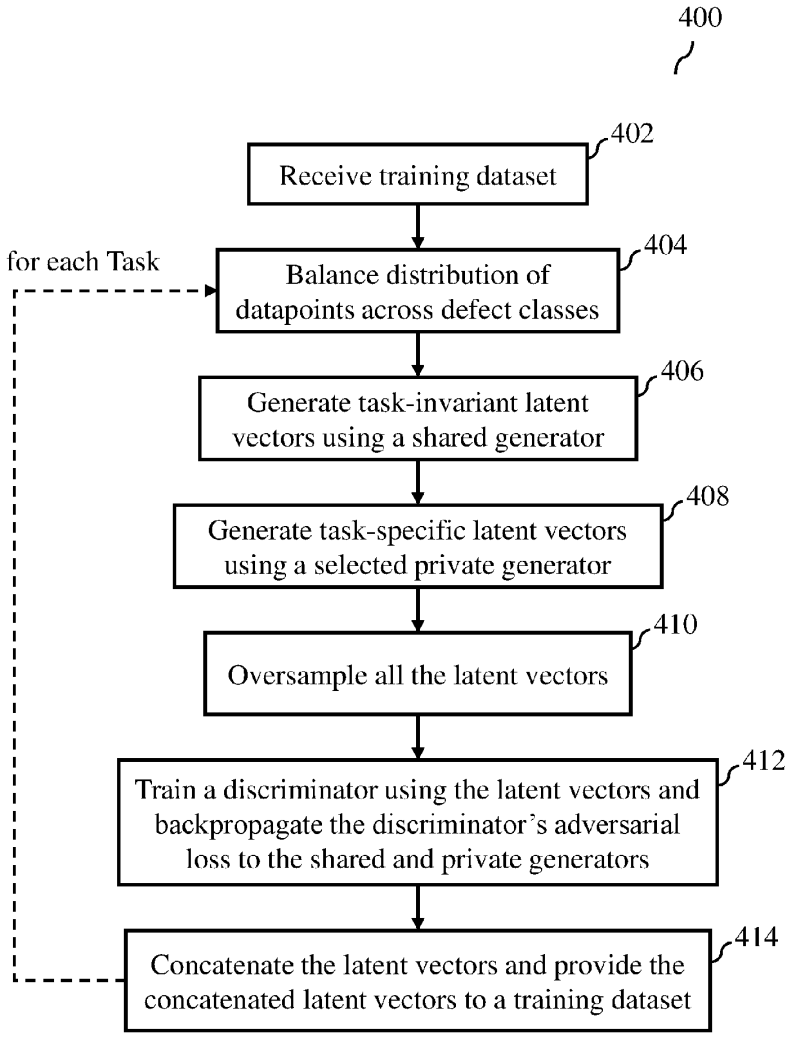
400
402
Receive training dataset
for each Task
404
Balance distribution of datapoints across defect classes
406
Generate task-invariant latent vectors using a shared generator
408
Generate task-specific latent vectors using a selected private generator
410
Oversample all the latent vectors
412
Train a discriminator using the latent vectors and backpropagate the discriminator's adversarial loss to the shared and private generators
414
Concatenate the latent vectors and provide the concatenated latent vectors to a training dataset

FIGURE 4

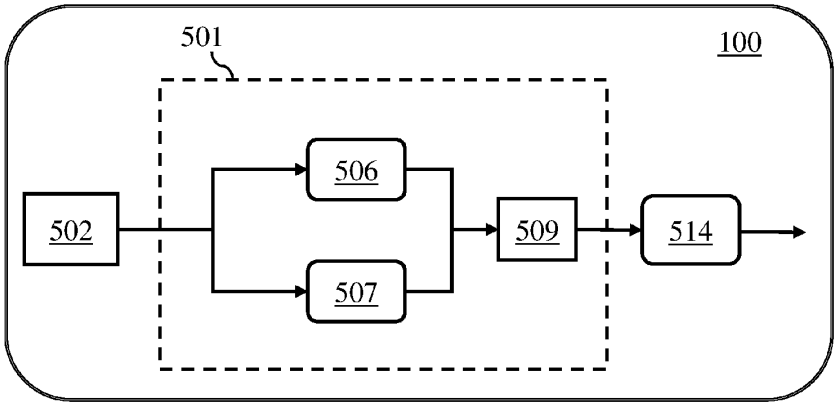

FIGURE 5

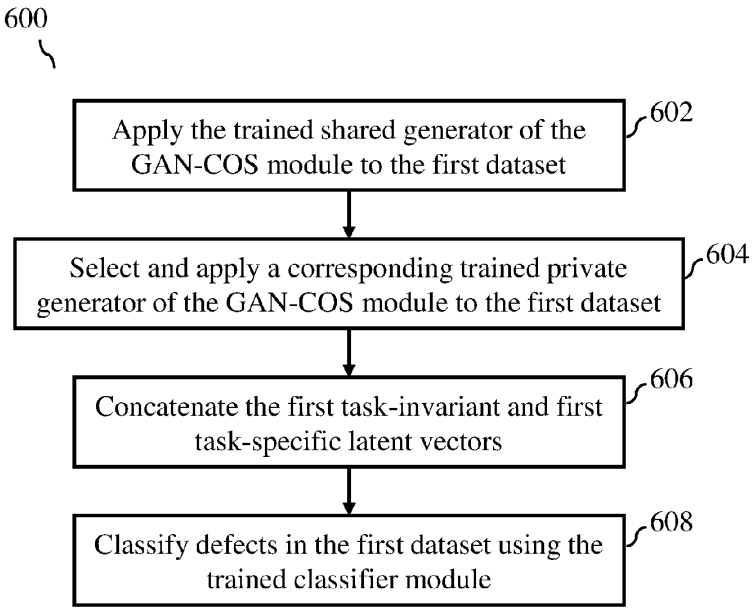

FIGURE 6