Fig. 1

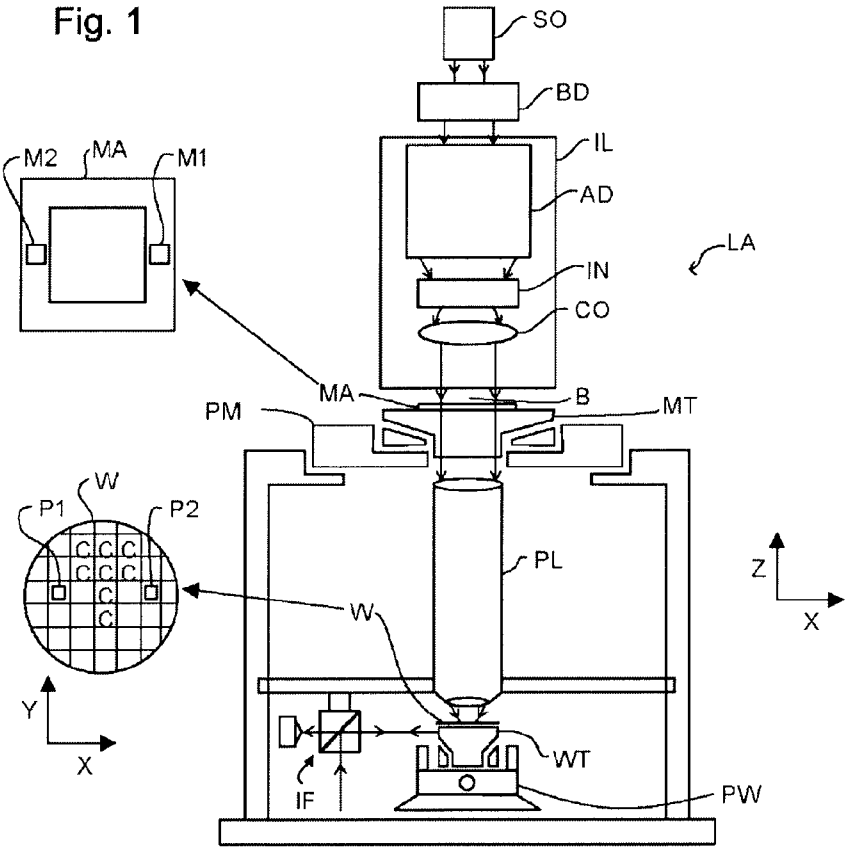
SO
BD
IL
AD
LA
IN
CO
M2
MA
M1
MA
B
MT
PM
W
P1
P2
PL
Z
X
W
Y
X
WT
IF
PW

Fig. 2

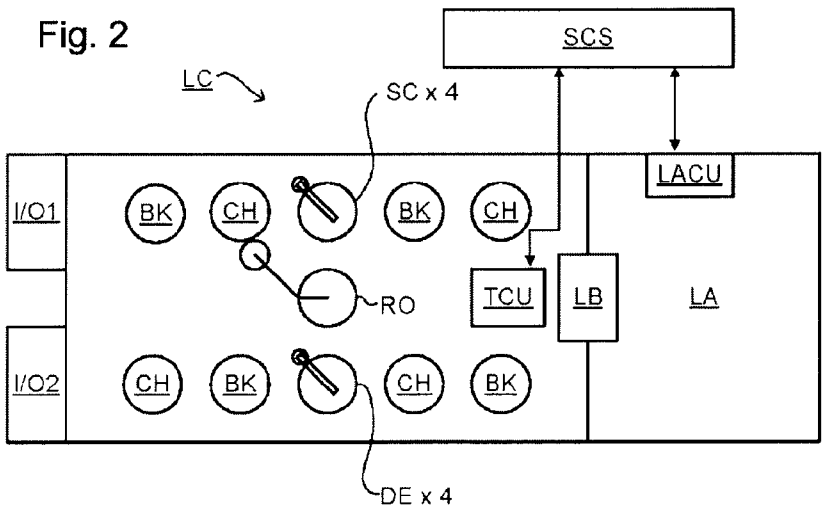
SCS
LC
SC x 4
LACU
I/O1
BK
CH
BK
CH
RO
TCU
LB
LA
I/O2
CH
BK
CH
BK
DE x 4

Fig. 3

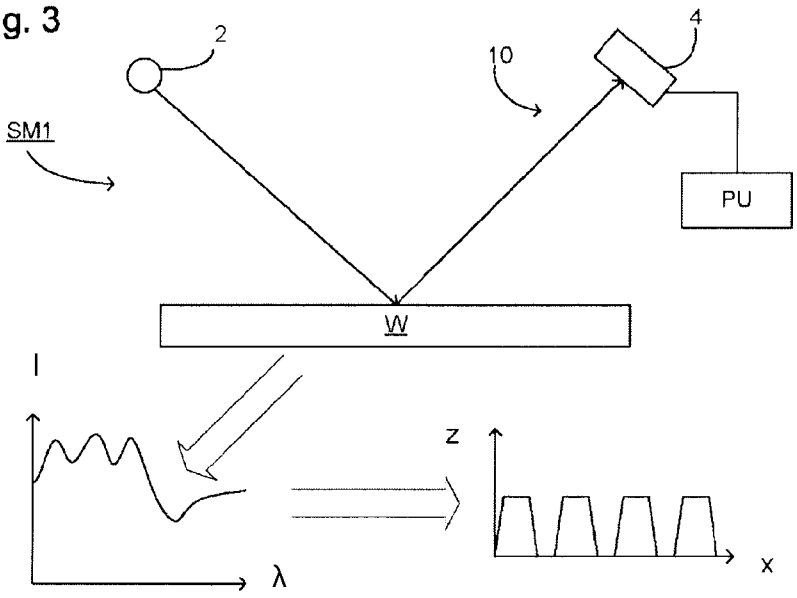

Fig. 4

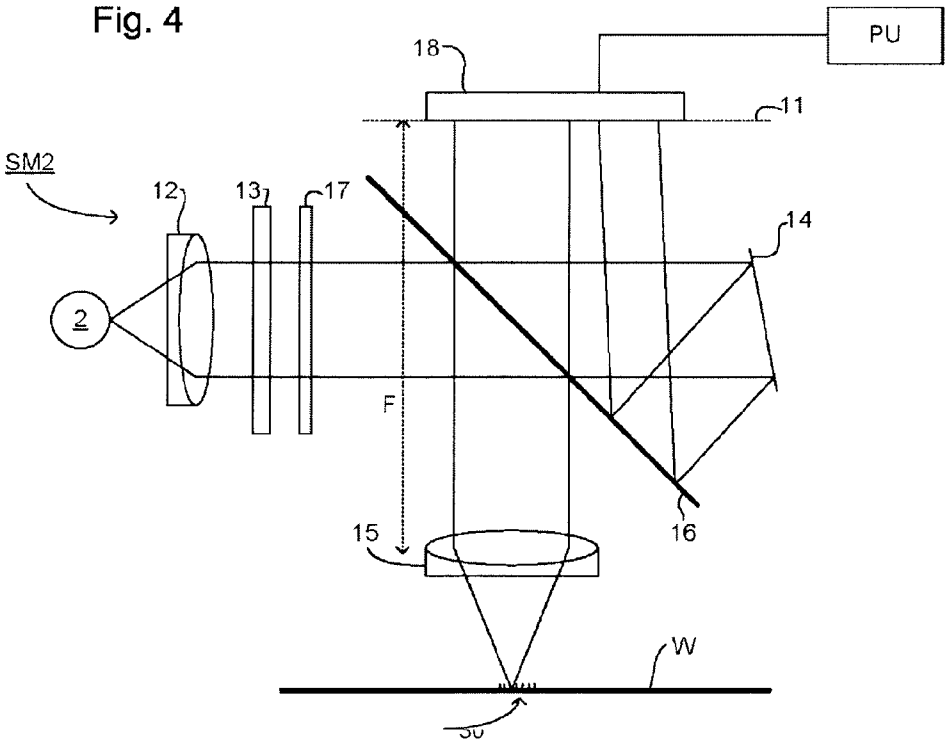

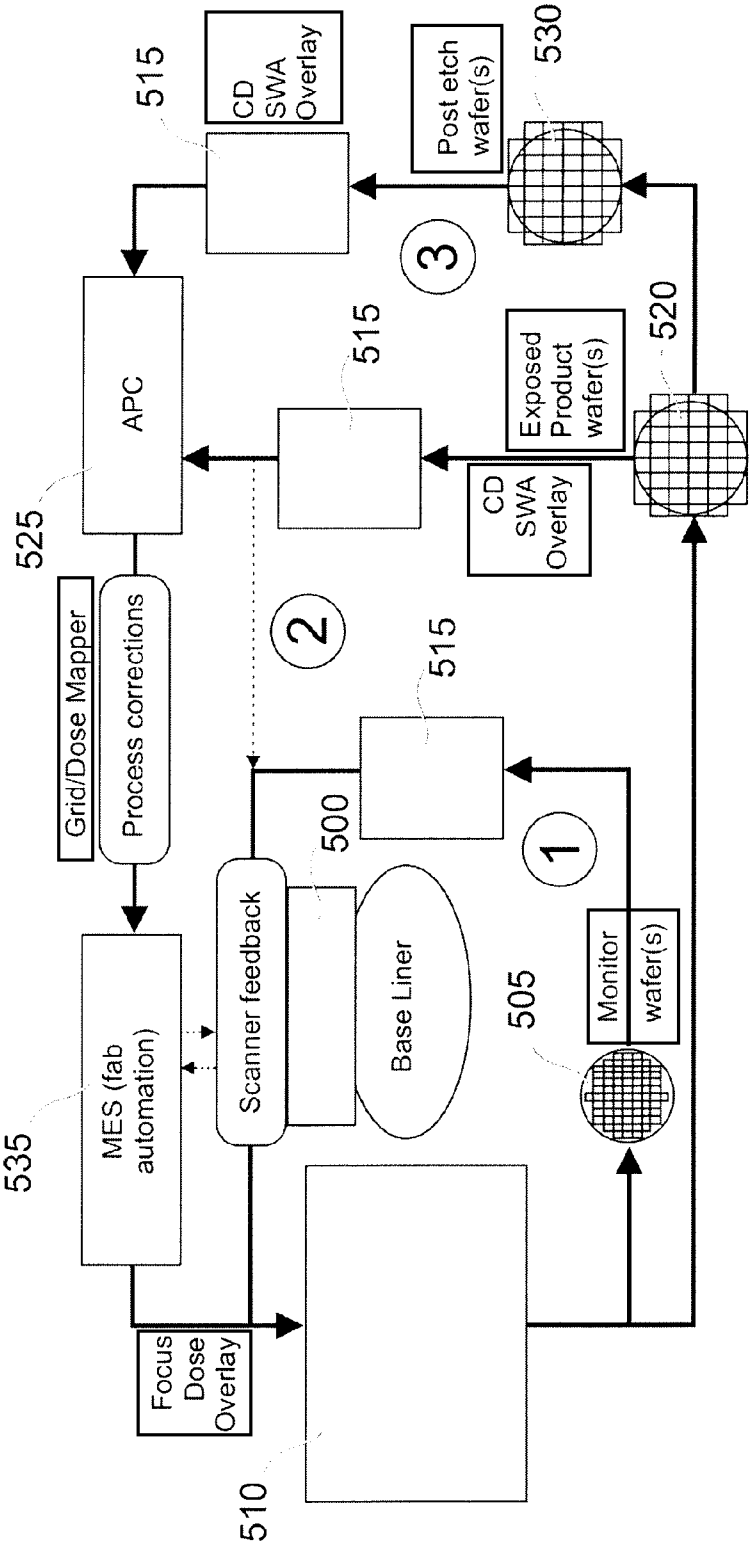
CD SWA Overlay
515
Post etch wafer(s)
530
3
APC
515
Exposed Product wafer(s)
520
525
CD SWA Overlay
Grid/Dose Mapper
Process corrections
2
515
500
1
Scanner feedback
Base Liner
505
Monitor wafer(s)
535
MES (fab automation)
Focus Dose Overlay
510

Fig. 5

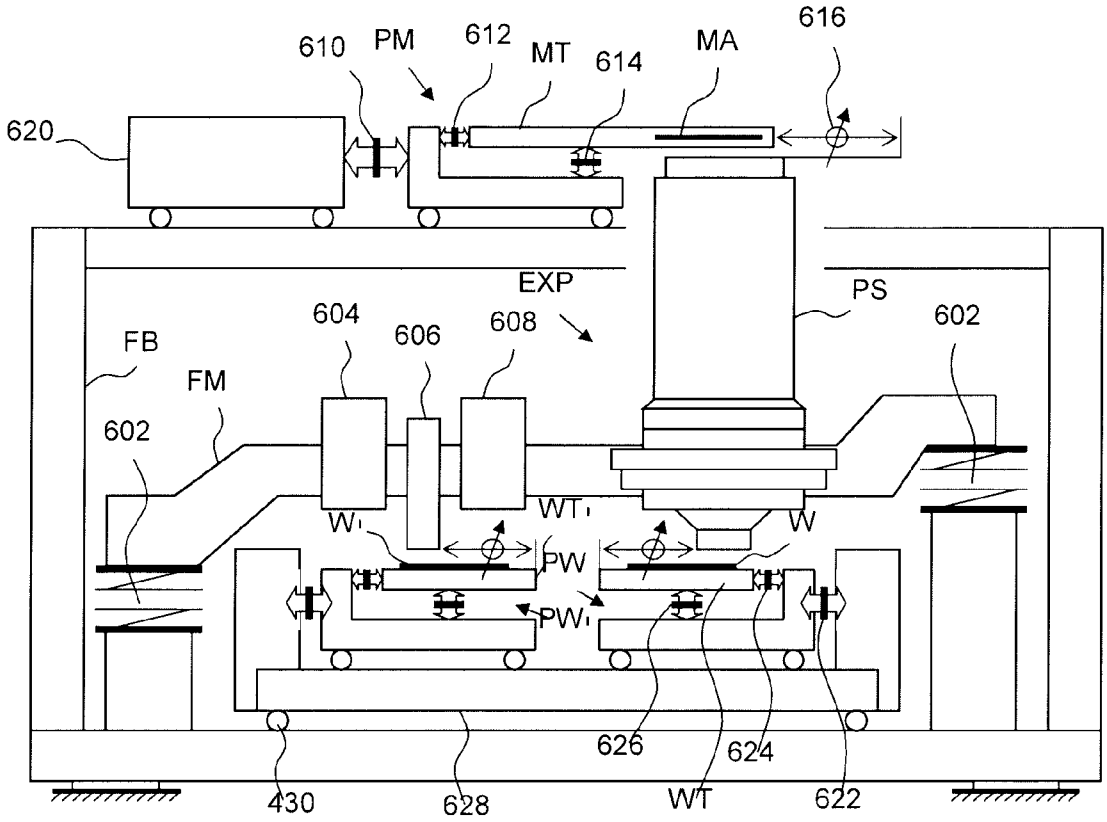
610
PM
612
MT
614
MA
616
620
EXP
PS
602
604
606
608
FB
FM
602
W
WT
W
PW
PW
626
624
430
628
WT
622

Fig. 6

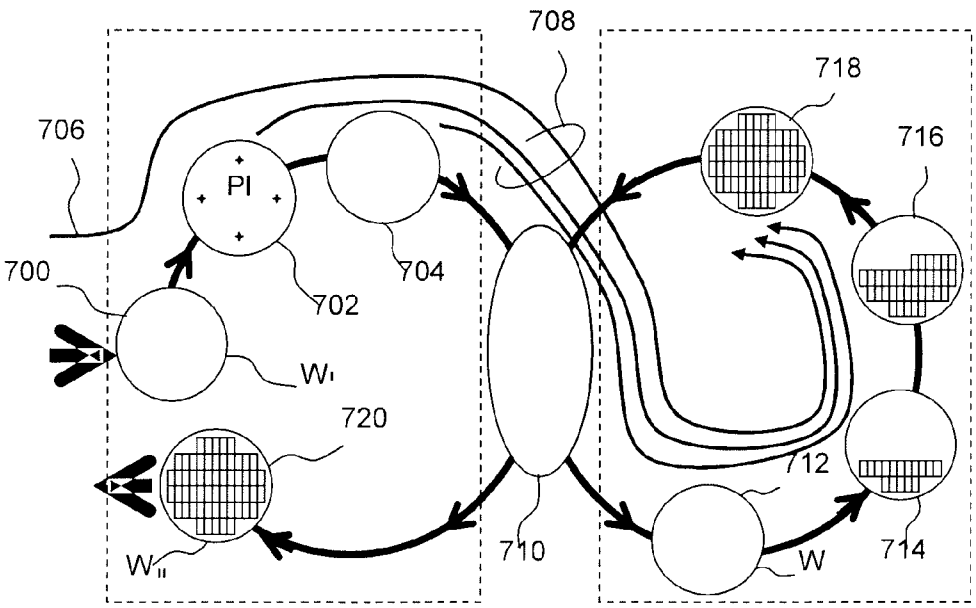
708
718
706
716
PI
704
700
702
W
720
712
710
W
714
W

Fig. 7