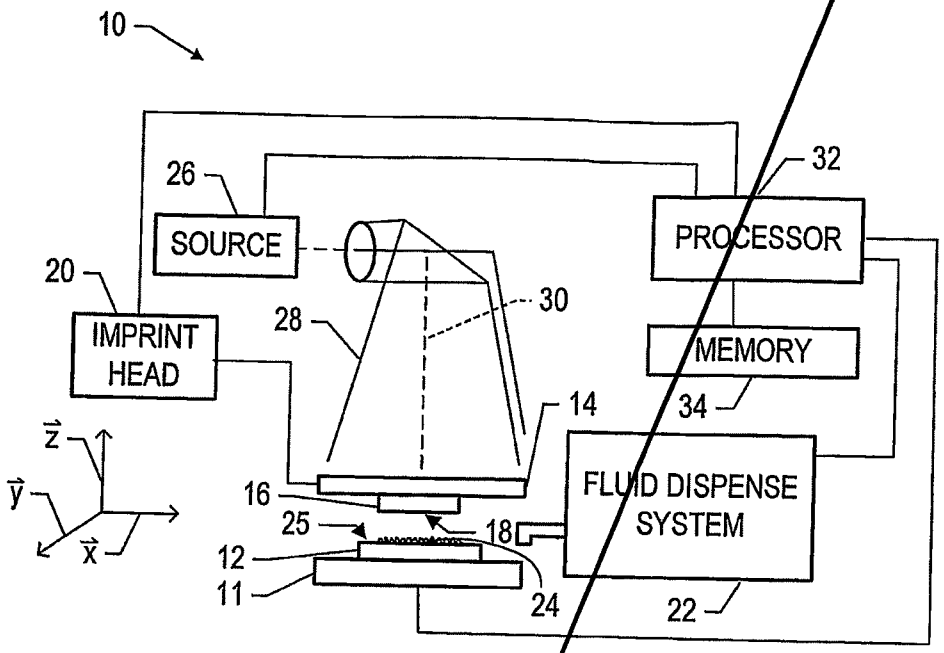


*FIG. 1*
*(Prior Art)*

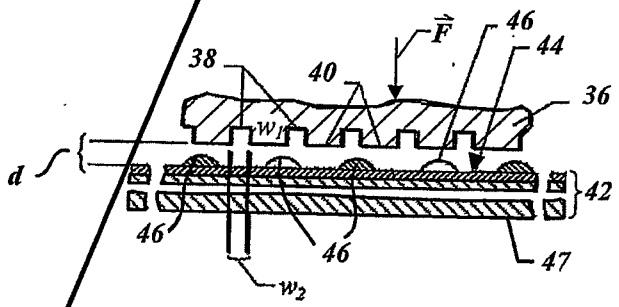


*FIG. 2*

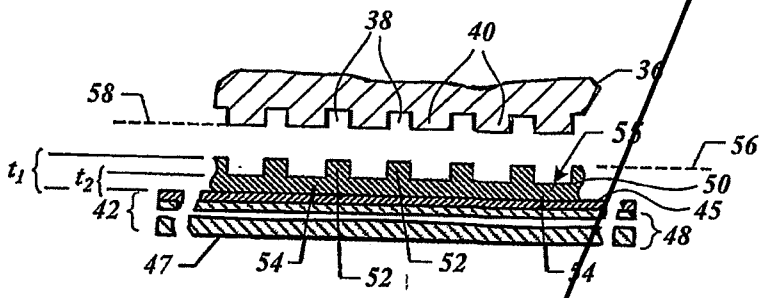


FIG. 3

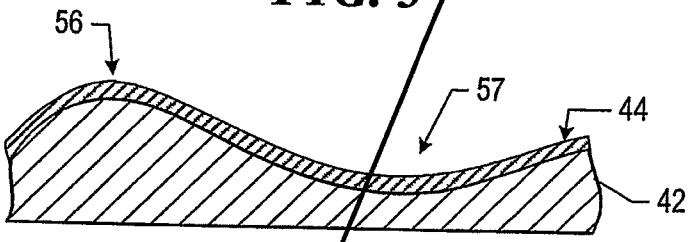


FIG. 4

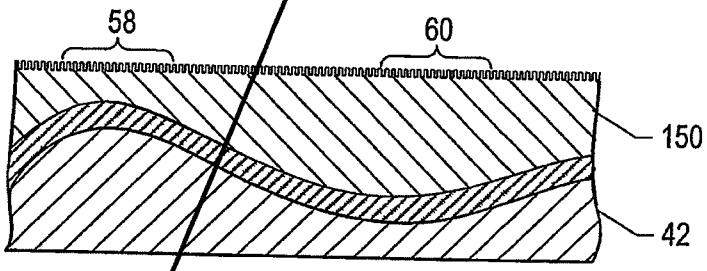


FIG. 5

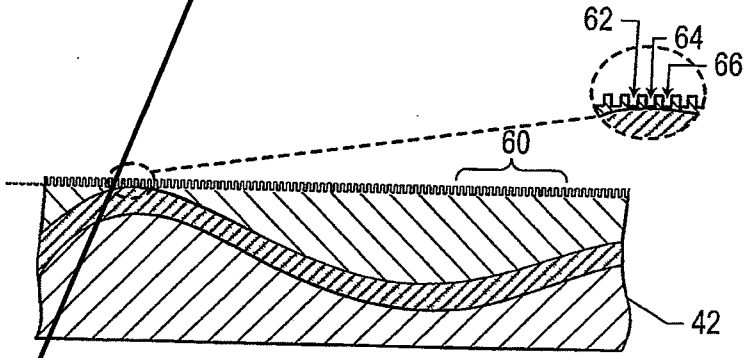


FIG. 6

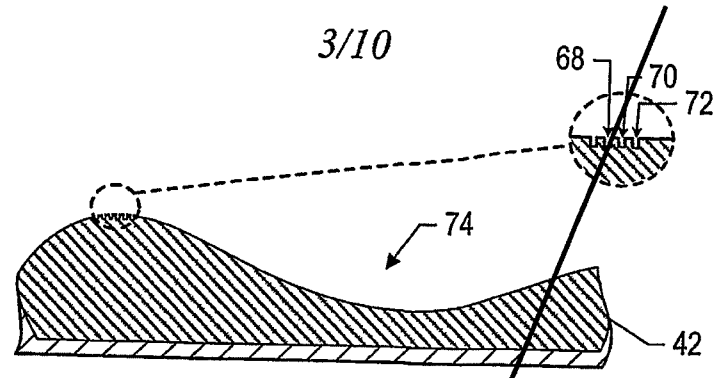


FIG. 7

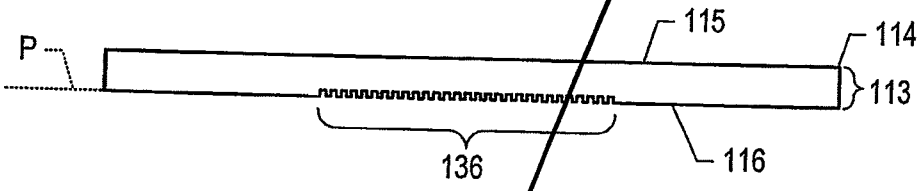


FIG. 8

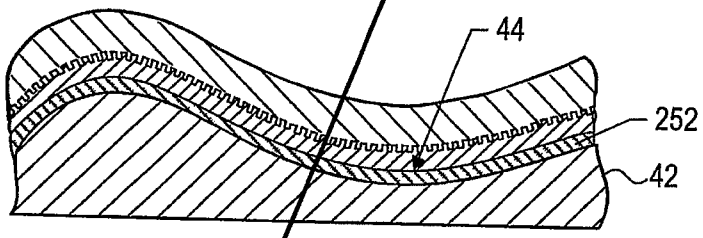


FIG. 9

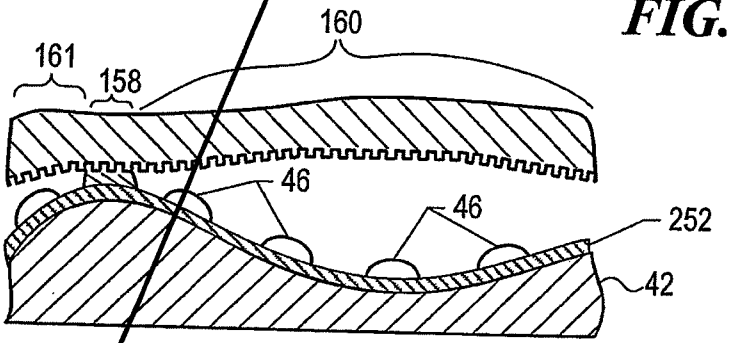


FIG. 10

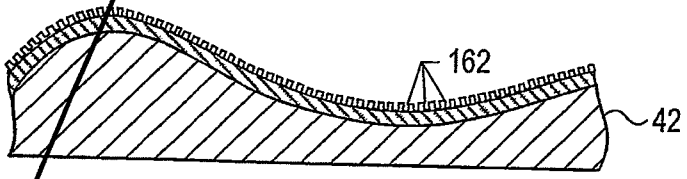


FIG. 11

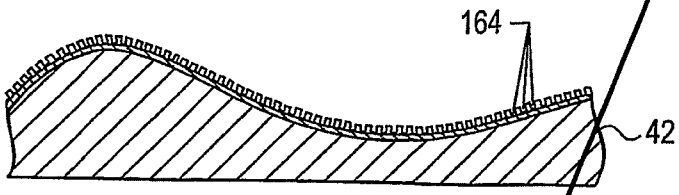


FIG. 12

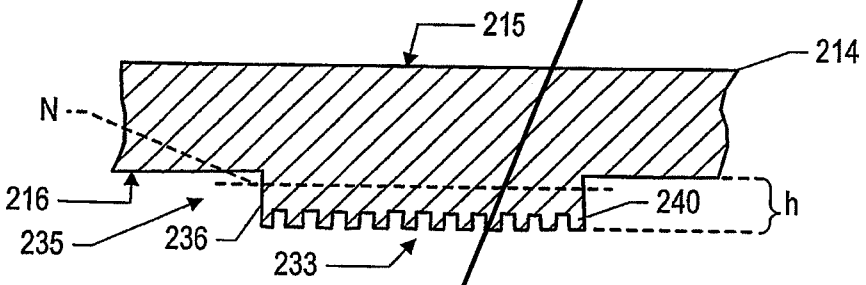


FIG. 13

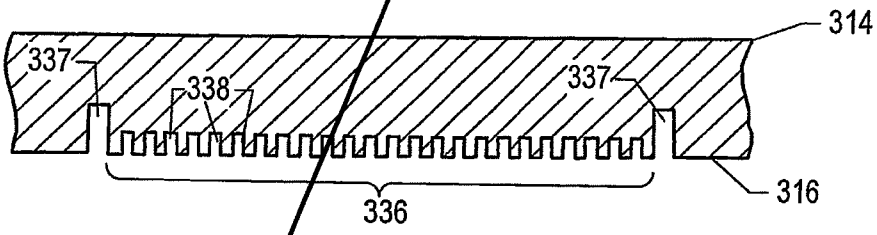


FIG. 14

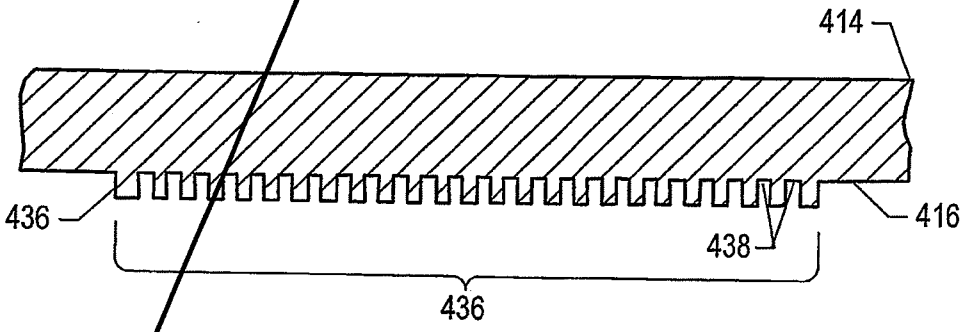


FIG. 15

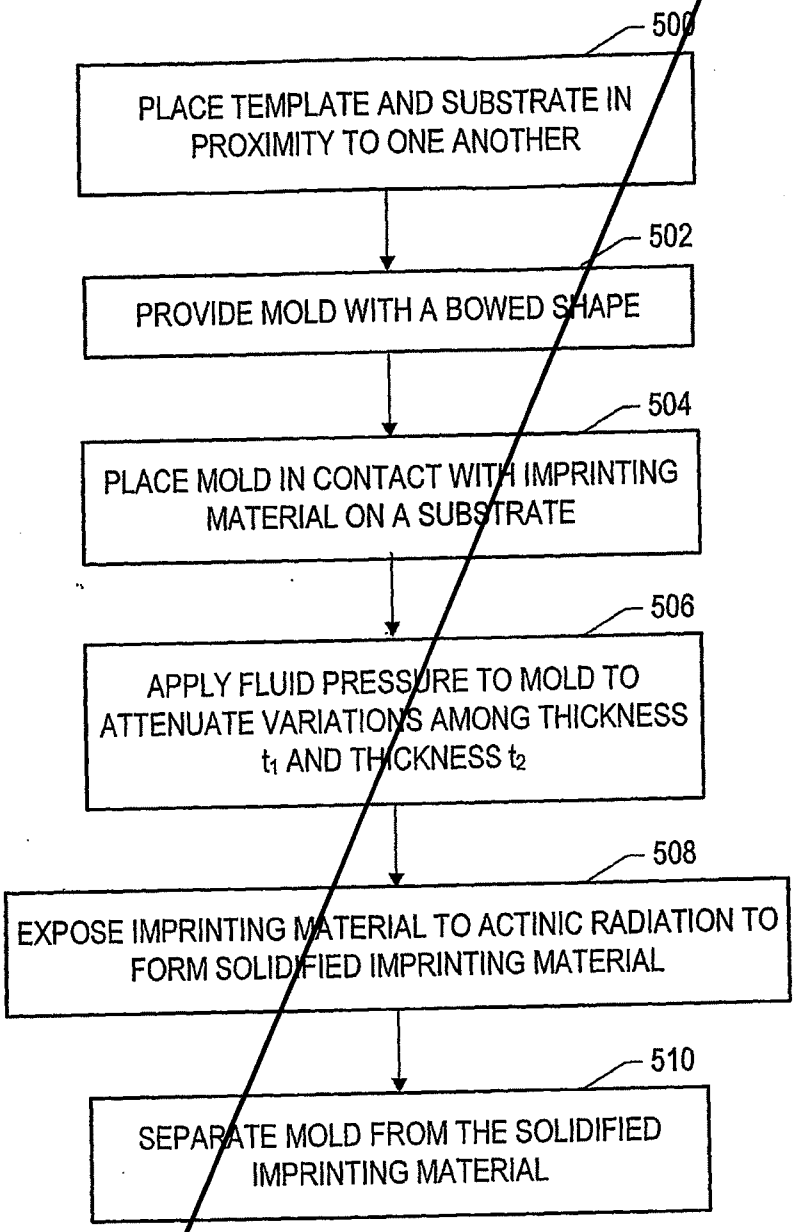
500
PLACE TEMPLATE AND SUBSTRATE IN PROXIMITY TO ONE ANOTHER
502
PROVIDE MOLD WITH A BOWED SHAPE
504
PLACE MOLD IN CONTACT WITH IMPRINTING MATERIAL ON A SUBSTRATE
506
APPLY FLUID PRESSURE TO MOLD TO ATTENUATE VARIATIONS AMONG THICKNESS $t_1$ AND THICKNESS $t_2$
508
EXPOSE IMPRINTING MATERIAL TO ACTINIC RADIATION TO FORM SOLIDIFIED IMPRINTING MATERIAL
510
SEPARATE MOLD FROM THE SOLIDIFIED IMPRINTING MATERIAL

*FIG. 16*

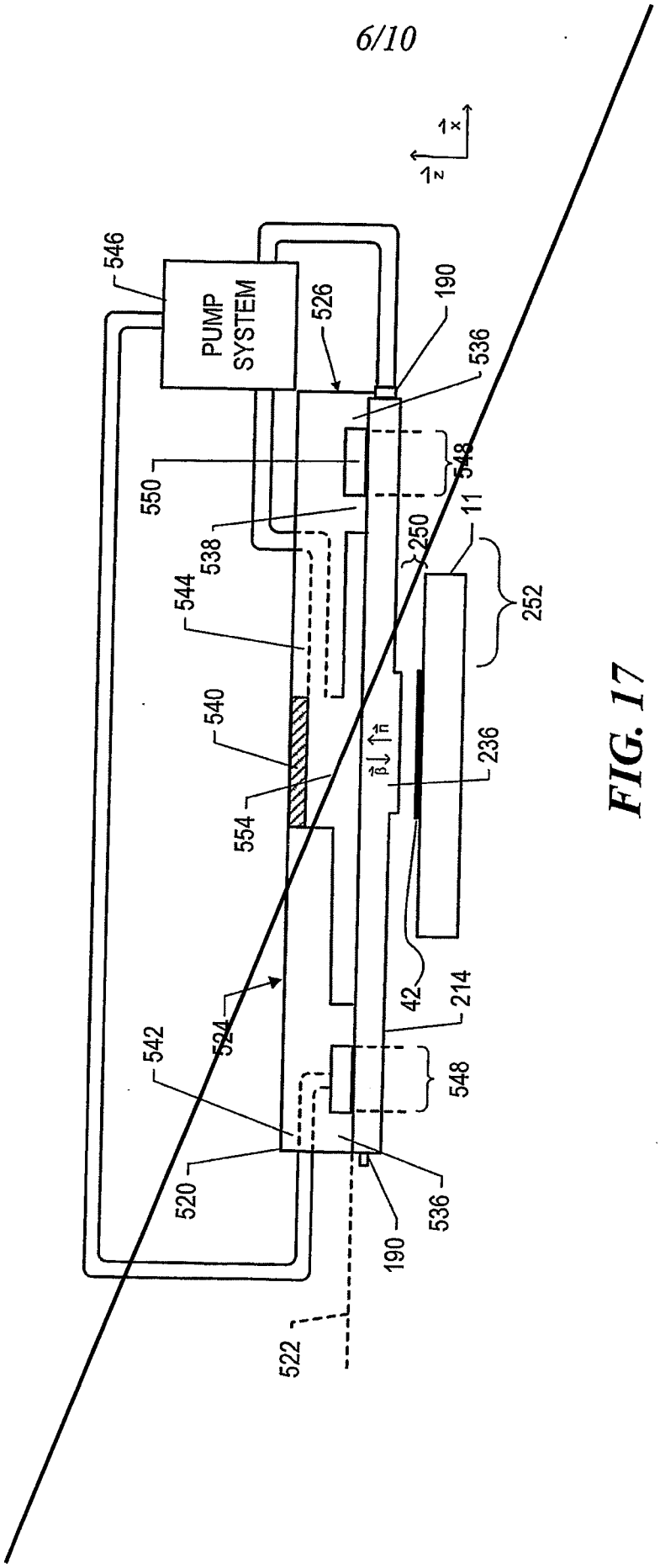
PUMP SYSTEM
546
526
190
536
550
548
538
250
11
544
252
540
236
554
42
214
524
542
548
520
536
190
522
x
z

FIG. 17

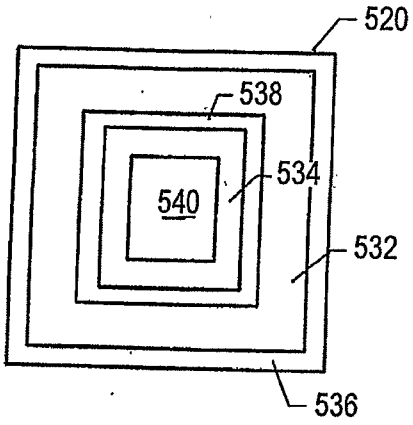
520
538
534
540
532
536

FIG. 18

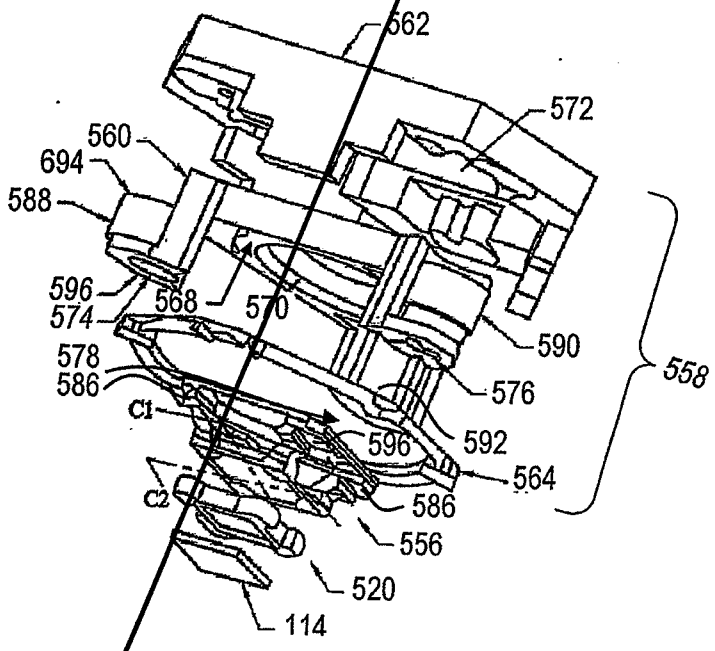
562
572
560
694
588
596
574
568
570
578
586
C1
C2
590
576
596
592
564
586
556
520
114
558

FIG. 19

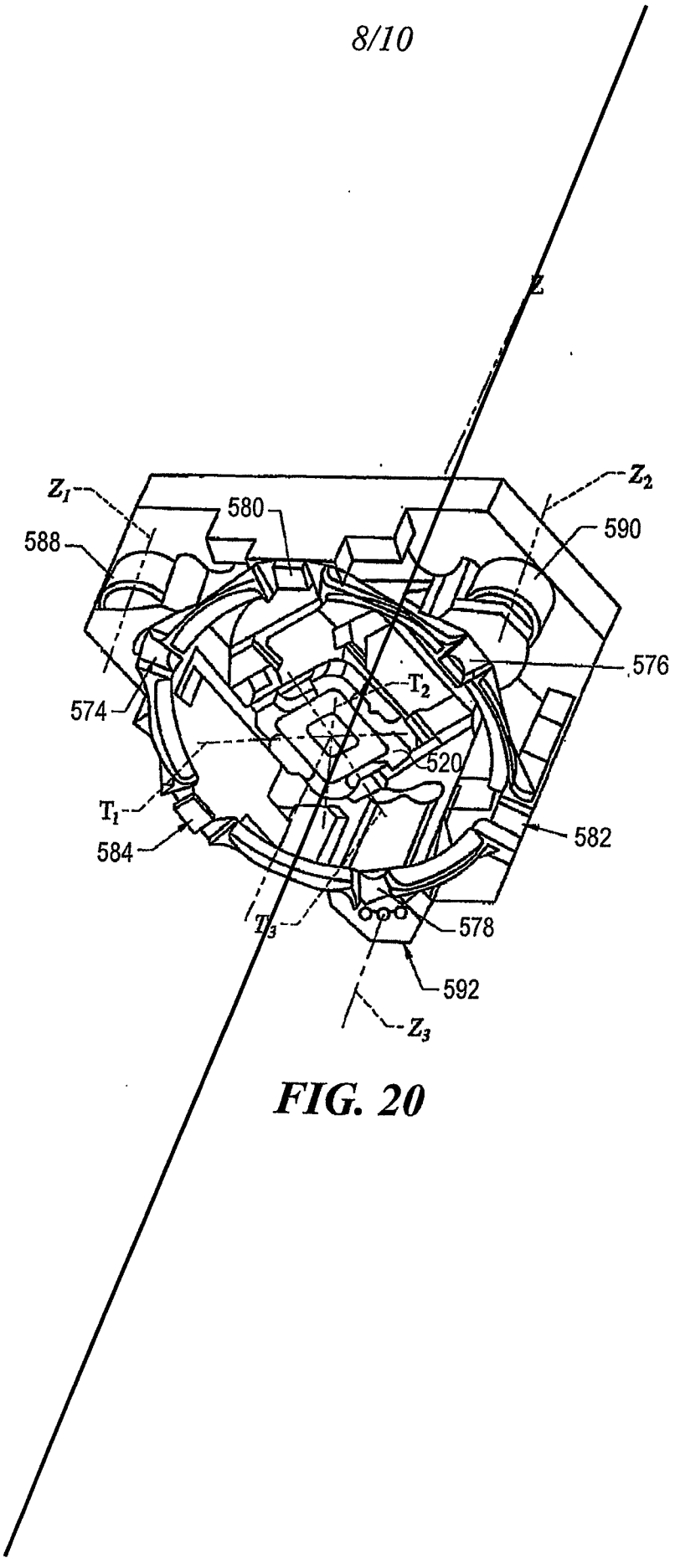


*FIG. 20*

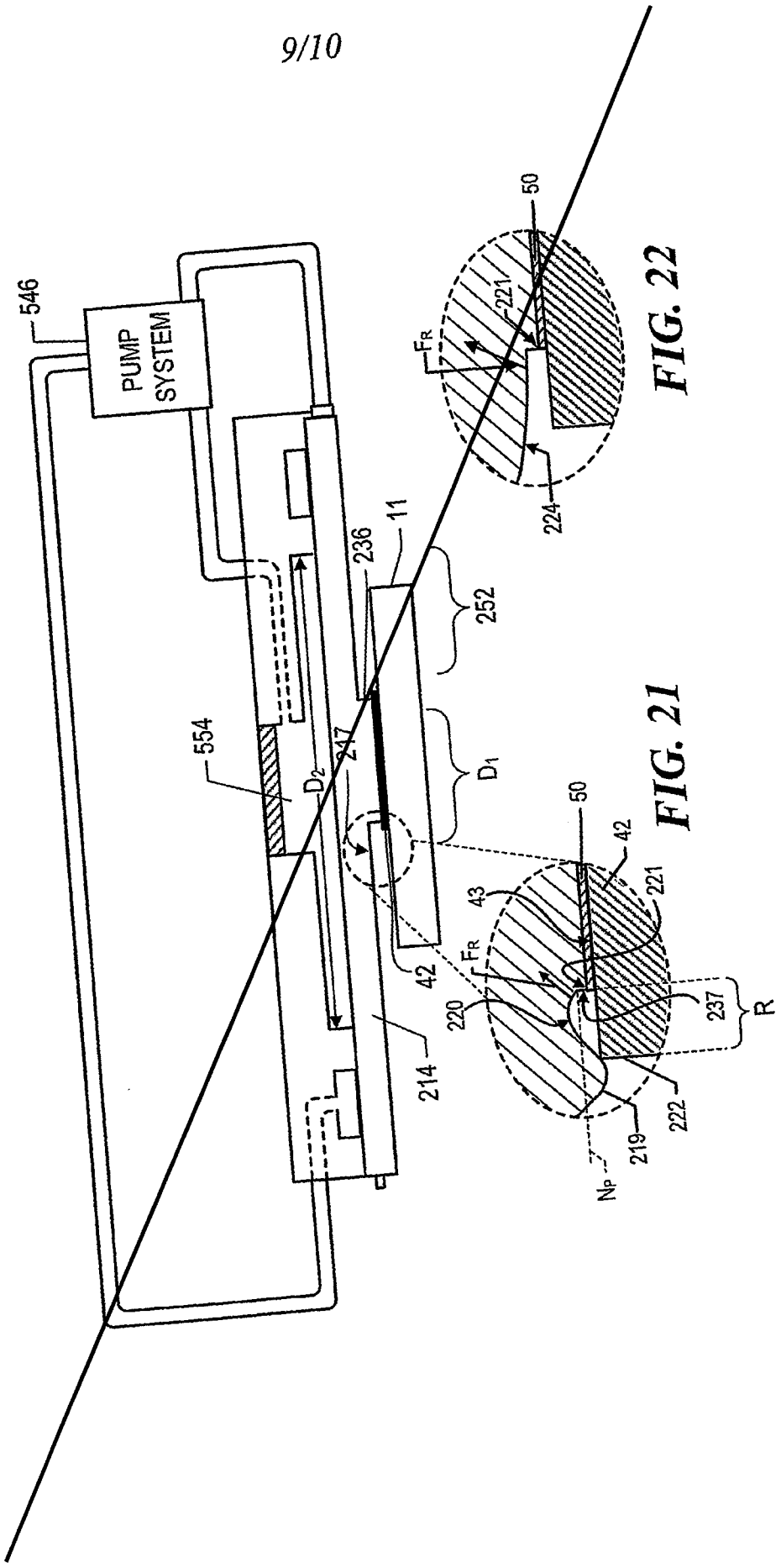
546
PUMP SYSTEM
554
$D_2$
247
236
11
252
$D_1$
42
214
50
221
$F_R$
224
43
220
237
R
222
219
$N_P$

FIG. 22

FIG. 21

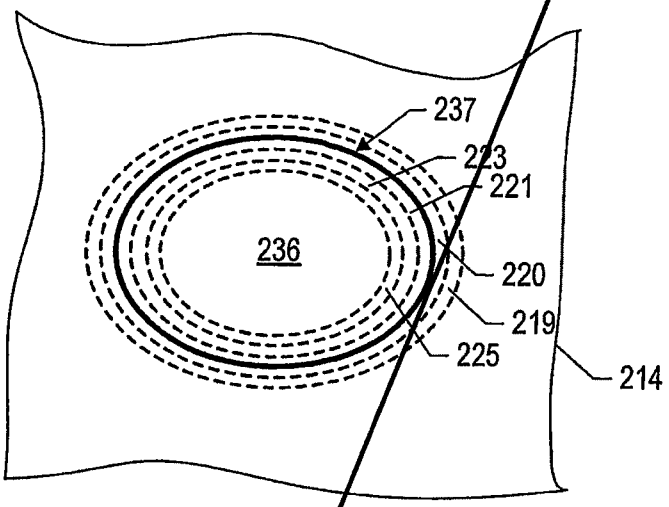


FIG. 23

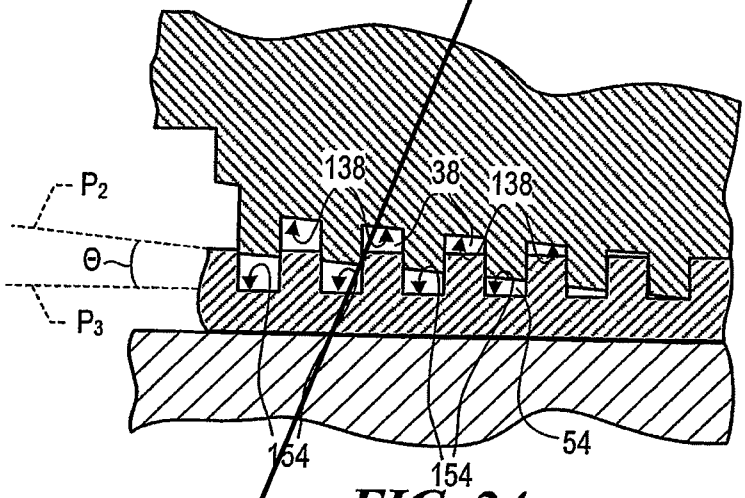


FIG. 24

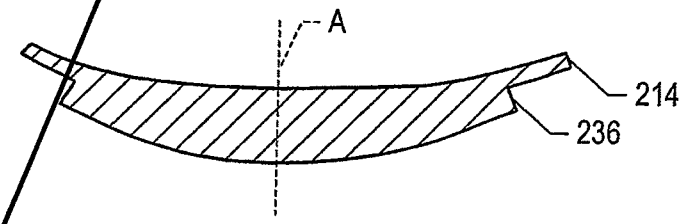


FIG. 25

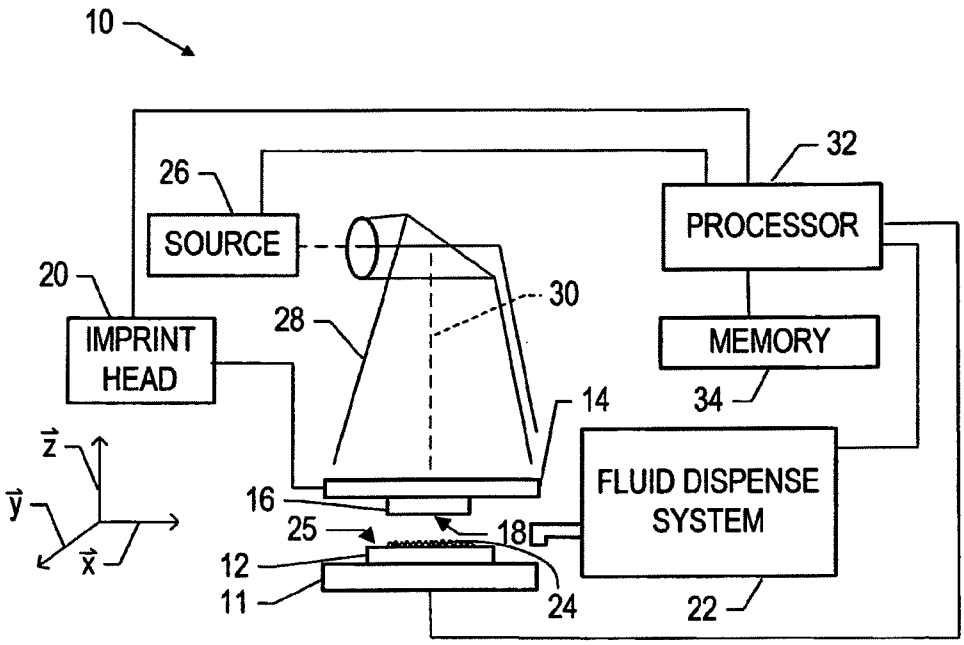


*FIG. 1*
*(Prior Art)*

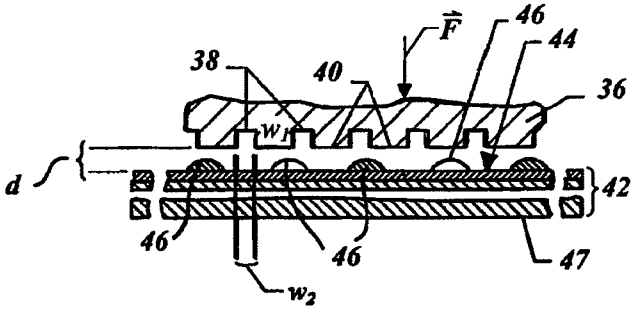


*FIG. 2*

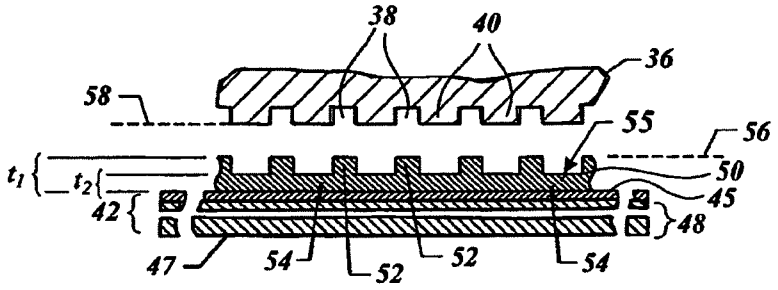


FIG. 3

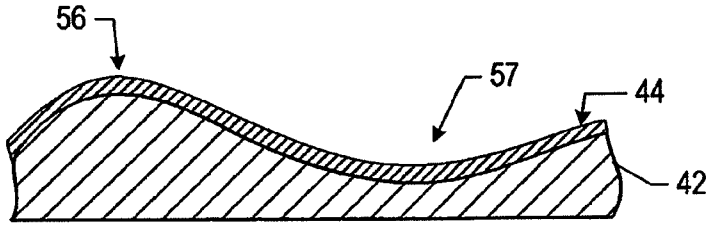


FIG. 4

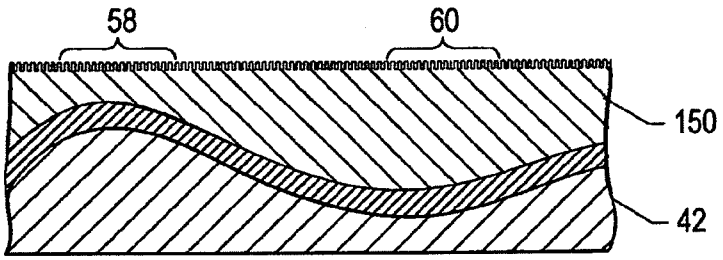


FIG. 5

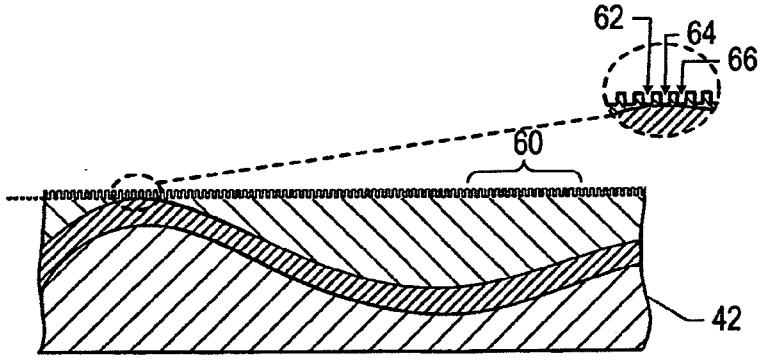


FIG. 6

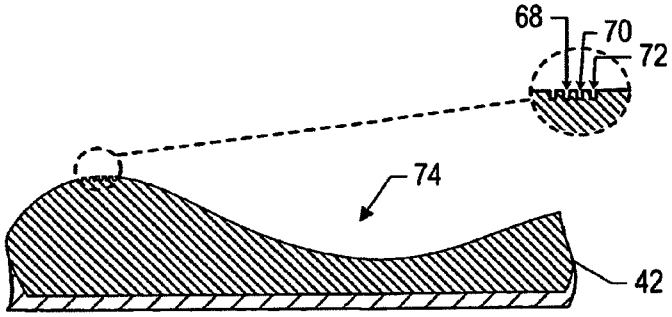


FIG. 7

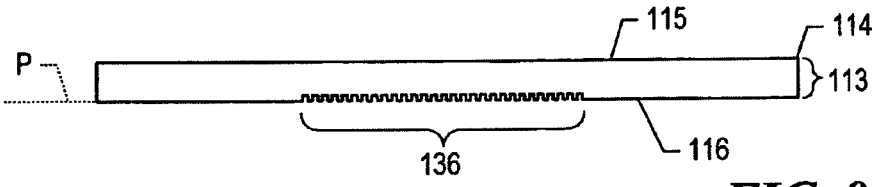


FIG. 8

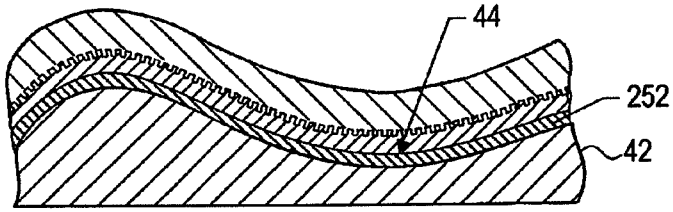


FIG. 9

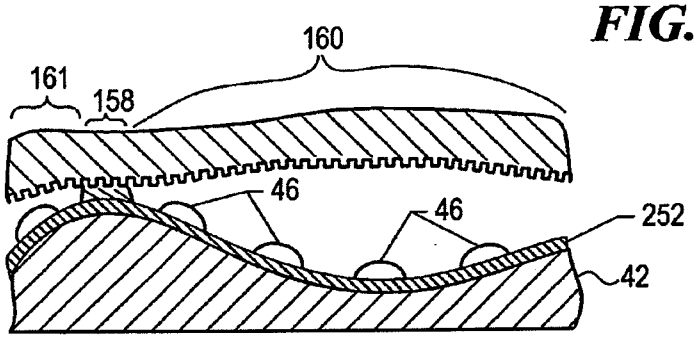


FIG. 10

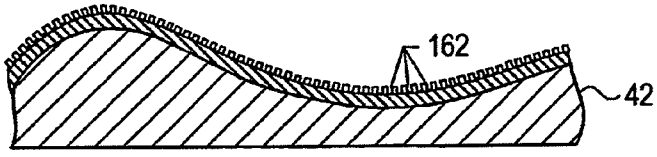


FIG. 11

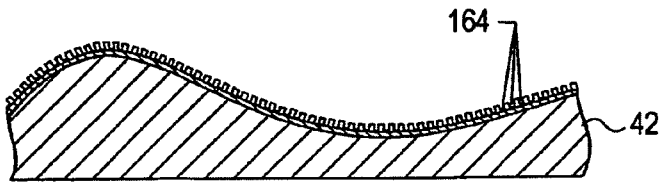


*FIG. 12*

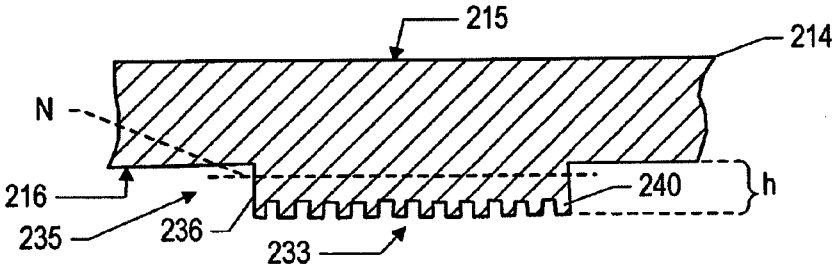


*FIG. 13*

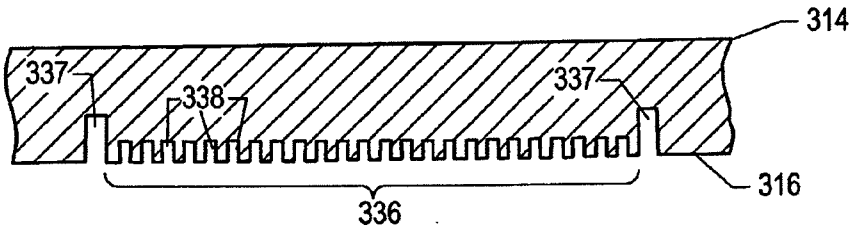


*FIG. 14*

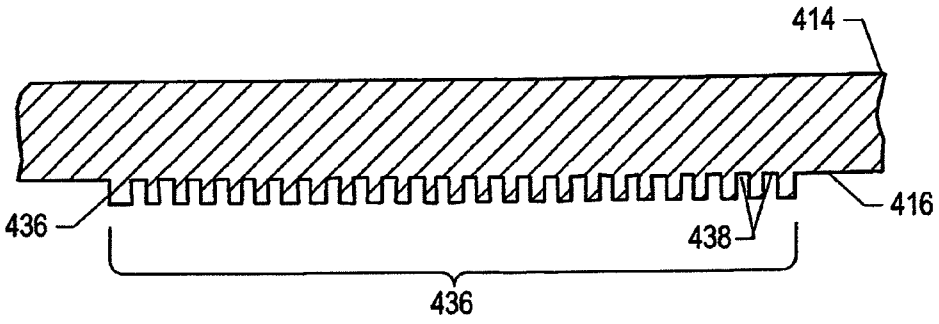


*FIG. 15*

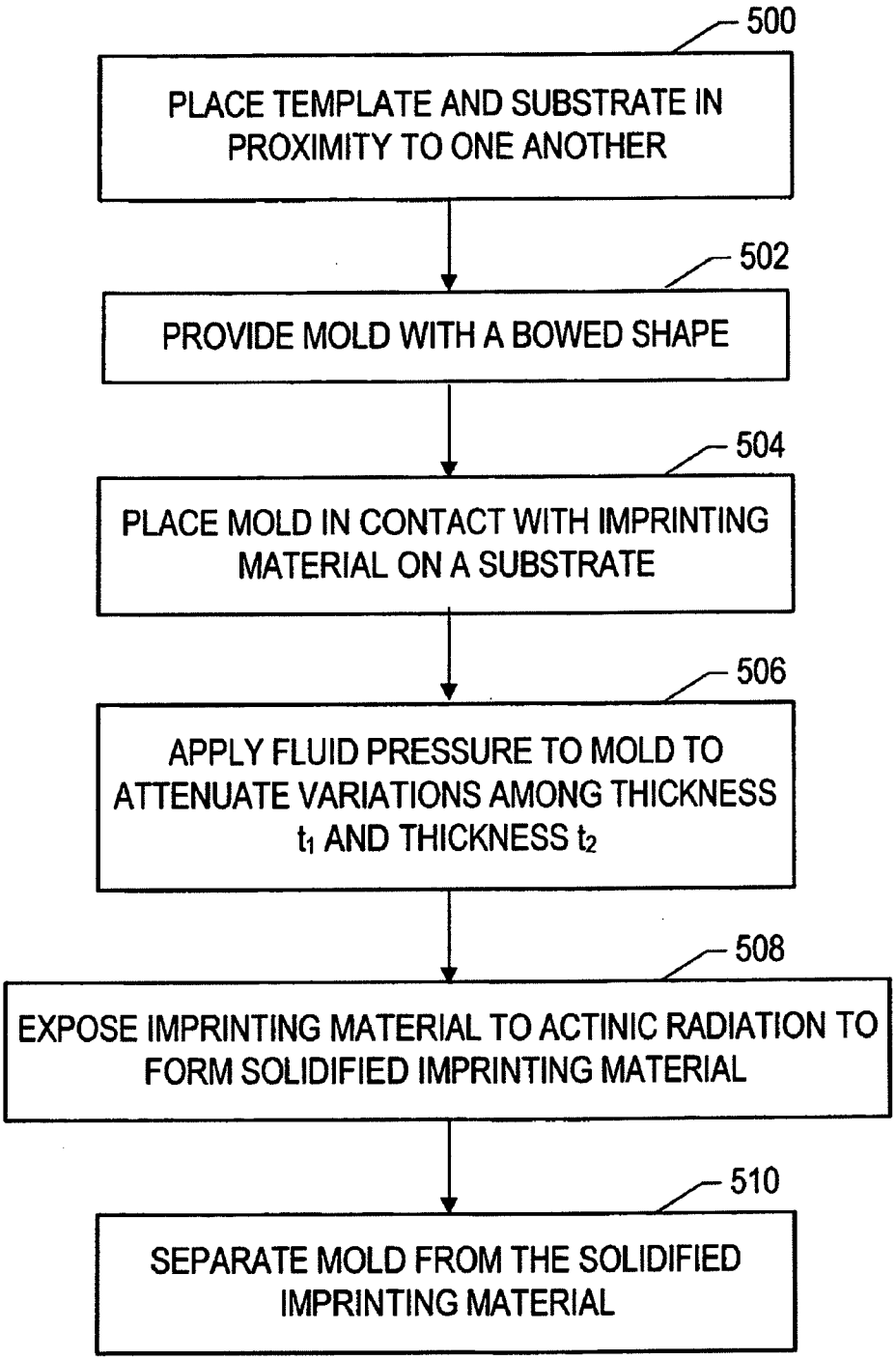
500
PLACE TEMPLATE AND SUBSTRATE IN PROXIMITY TO ONE ANOTHER
502
PROVIDE MOLD WITH A BOWED SHAPE
504
PLACE MOLD IN CONTACT WITH IMPRINTING MATERIAL ON A SUBSTRATE
506
APPLY FLUID PRESSURE TO MOLD TO ATTENUATE VARIATIONS AMONG THICKNESS $t_1$ AND THICKNESS $t_2$
508
EXPOSE IMPRINTING MATERIAL TO ACTINIC RADIATION TO FORM SOLIDIFIED IMPRINTING MATERIAL
510
SEPARATE MOLD FROM THE SOLIDIFIED IMPRINTING MATERIAL

*FIG. 16*

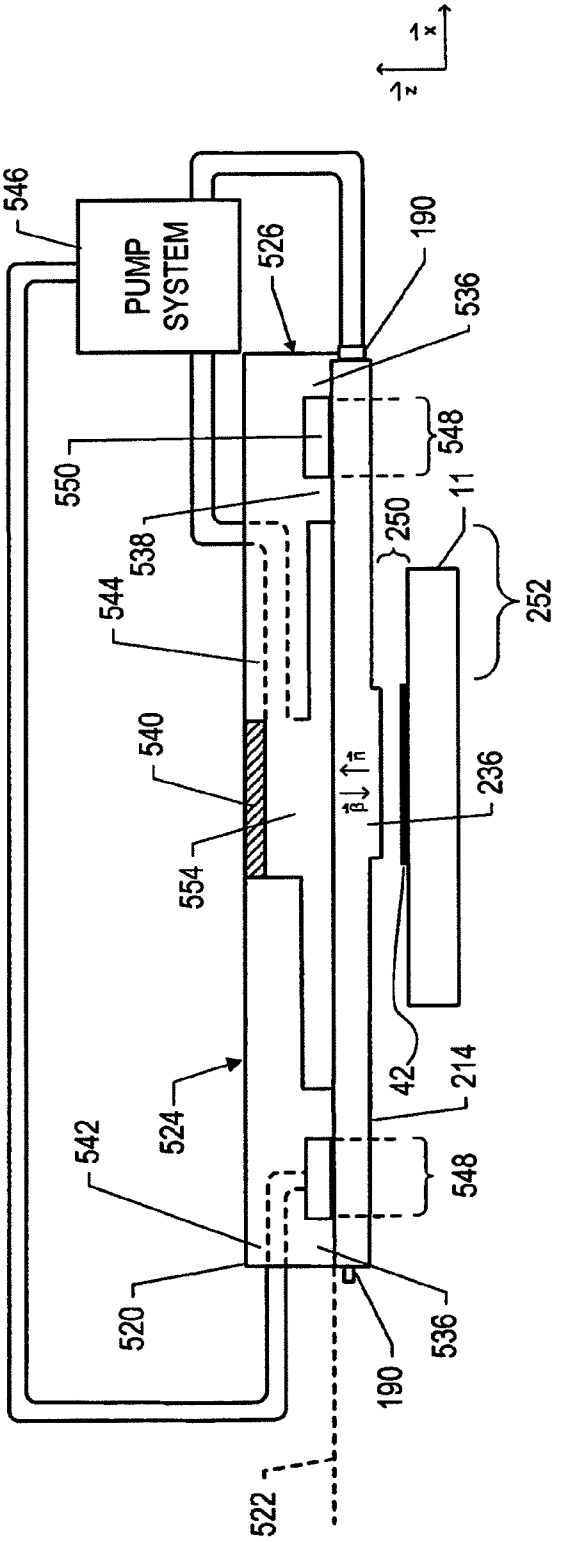
546
PUMP SYSTEM
526
190
536
548
550
538
11
250
544
252
540
236
554
42
214
524
542
548
520
536
190
522
x
z

*FIG. 17*

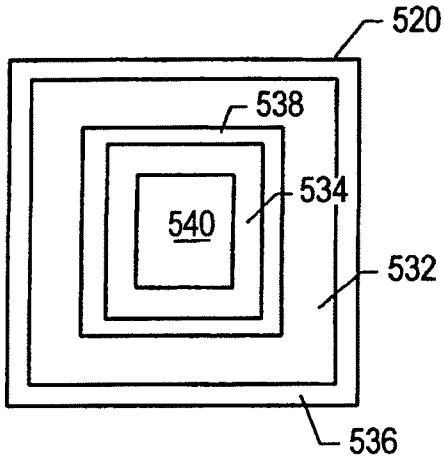
520
538
534
540
532
536

*FIG. 18*

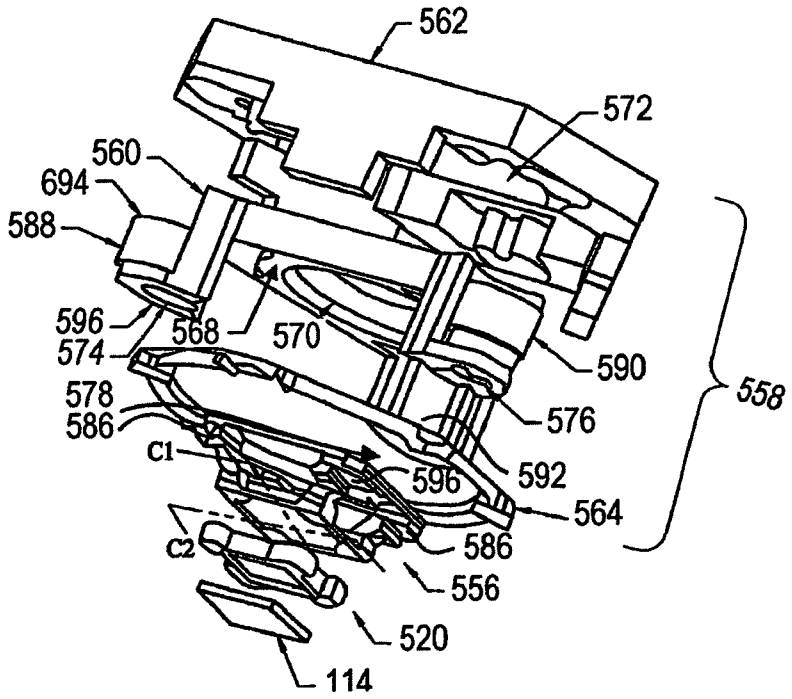
562
572
560
694
588
596
568
570
574
590
558
578
576
586
C1
596
592
564
C2
586
556
520
114

*FIG. 19*

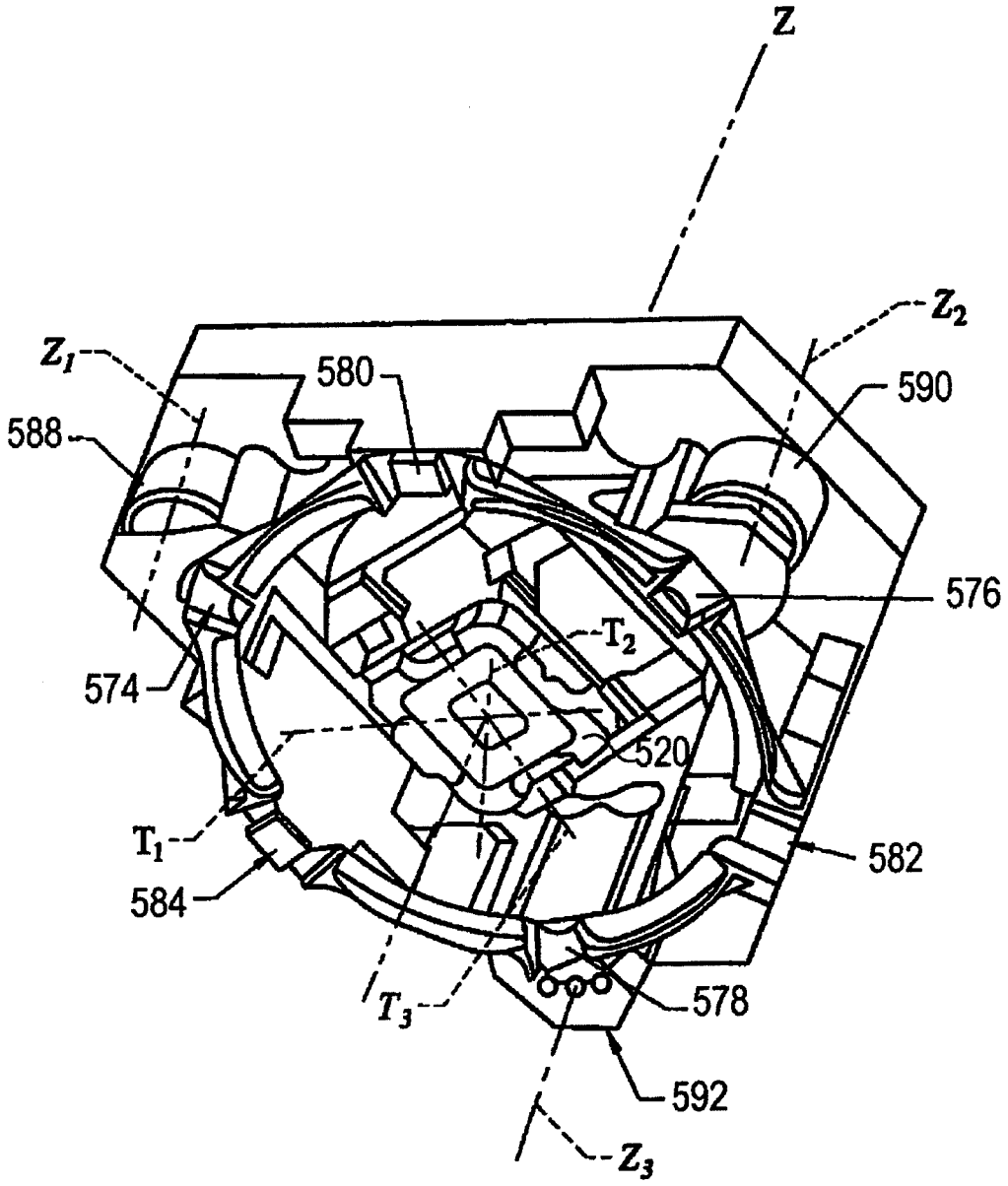


*FIG. 20*

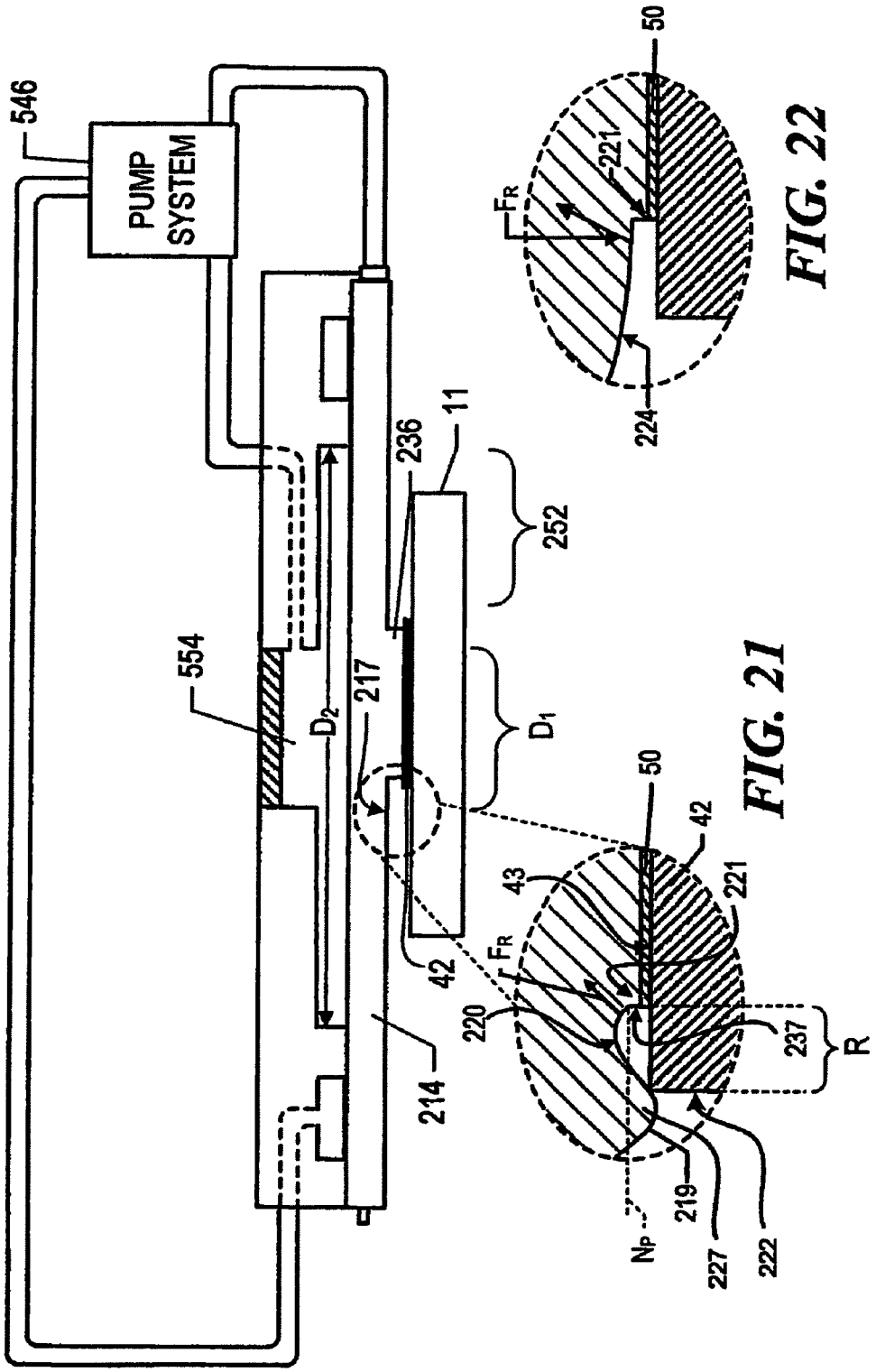
546
PUMP SYSTEM
554
$D_2$
217
236
11
252
$D_1$
42
214
50
221
$F_R$
224
50
42
43
221
$F_R$
220
237
R
219
$N_P$
227
222

FIG. 22

FIG. 21

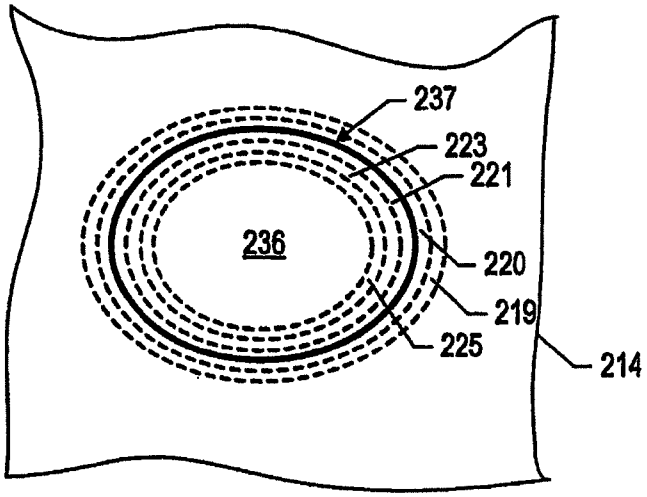


*FIG. 23*

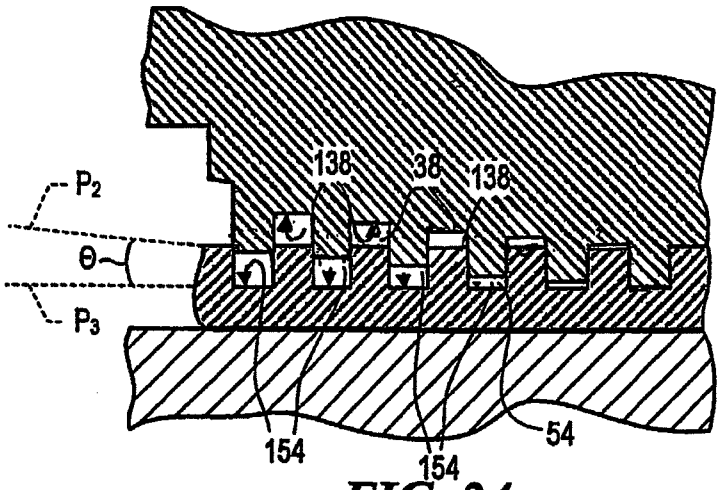


*FIG. 24*

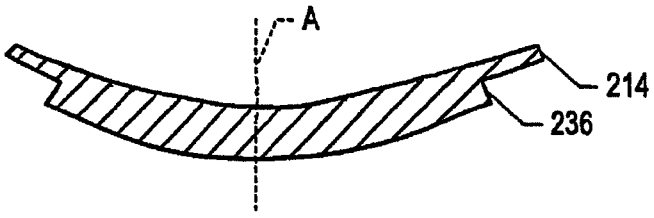


*FIG. 25*