[Fig. 1]

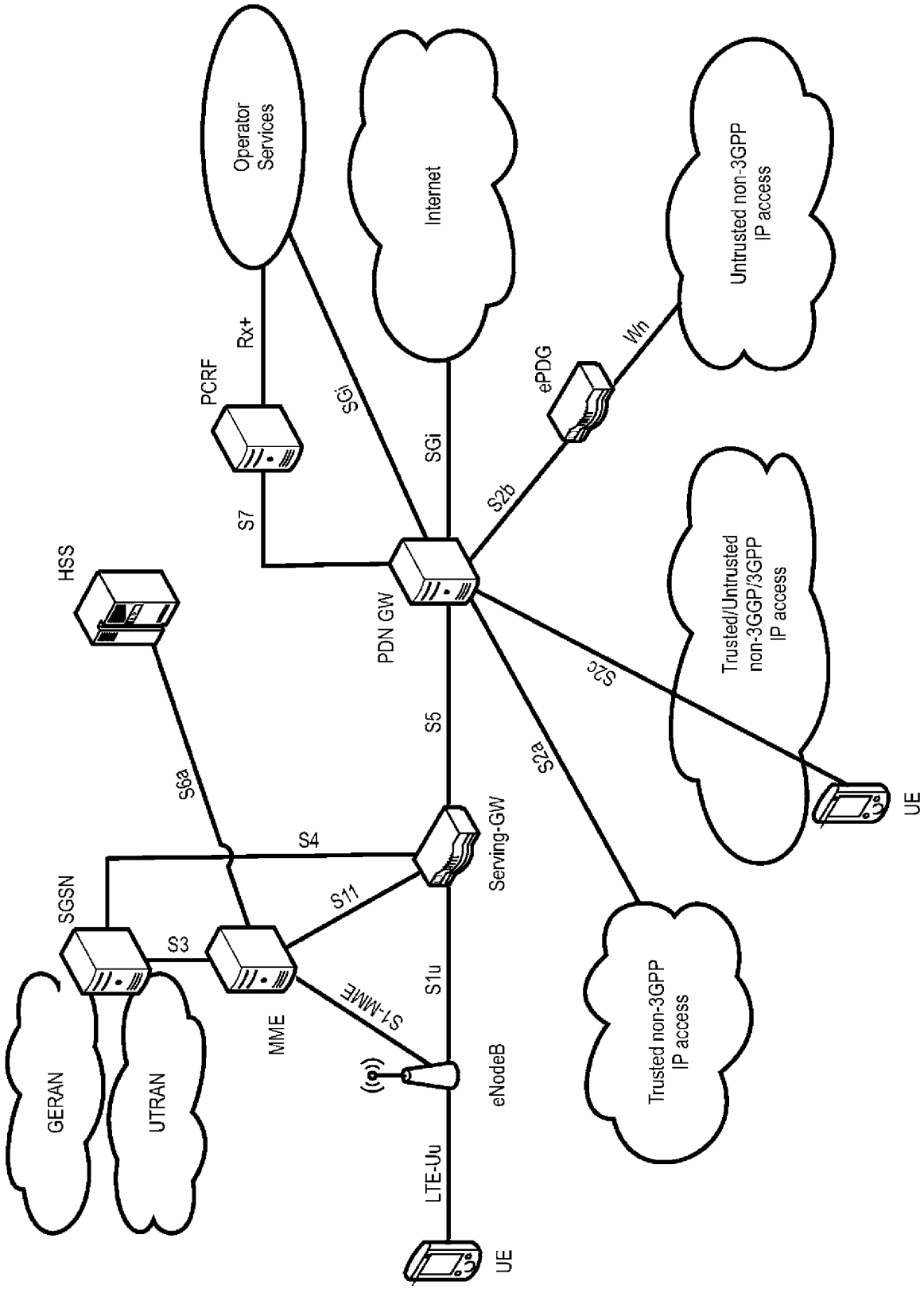
Operator Services
Internet
Untrusted non-3GPP IP access
Rx+
PCRF
SGi
ePDG
Wn
S7
S2b
HSS
PDN GW
Trusted/Untrusted non-3GPP/3GPP IP access
S2c
S6a
S5
S2a
UE
S4
Serving-GW
SGSN
S11
S3
S1u
S1-MME
GERAN
UTRAN
MME
eNodeB
Trusted non-3GPP IP access
LTE-Uu
UE

[Fig. 2]

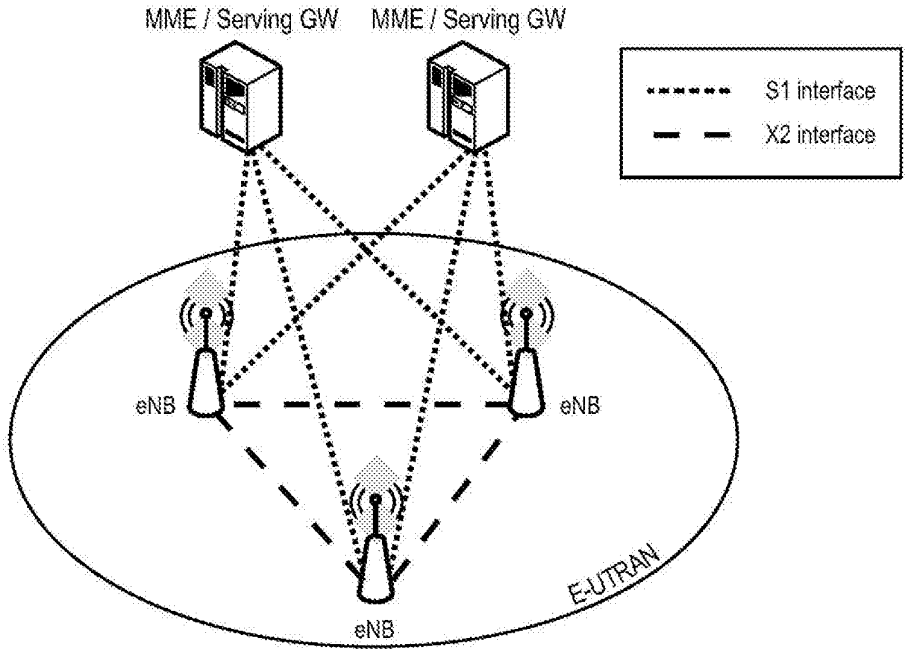
MME / Serving GW
MME / Serving GW
S1 interface
X2 interface
eNB
eNB
eNB
E-UTRAN

[Fig. 3]

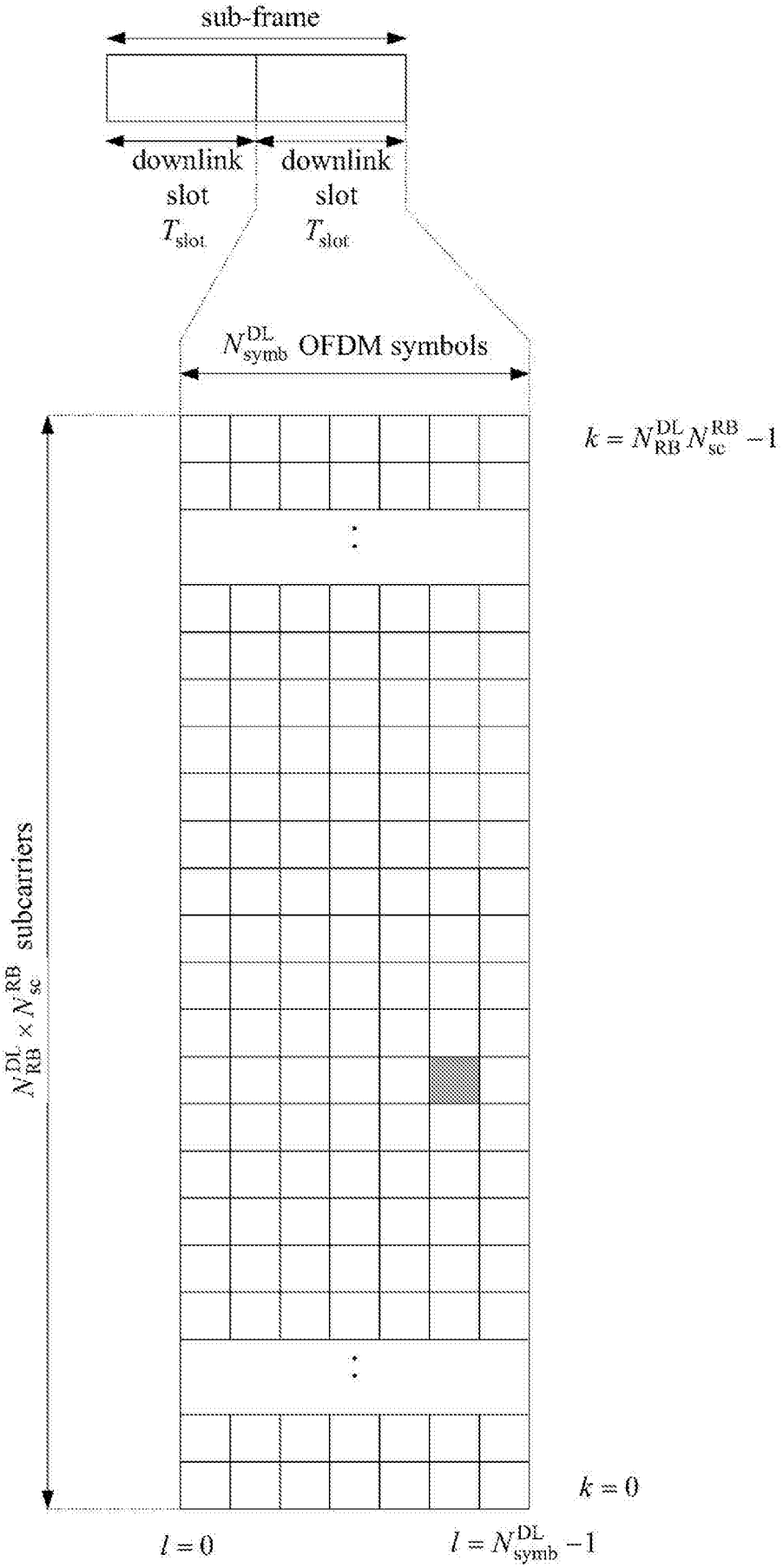
sub-frame
downlink slot T_{slot}
downlink slot T_{slot}
N_{symb}^{DL} OFDM symbols
$k = N_{RB}^{DL} N_{sc}^{RB} - 1$
$N_{RB}^{DL} \times N_{sc}^{RB}$ subcarriers
$k = 0$
$l = 0$
$l = N_{symb}^{DL} - 1$

[Fig. 4]

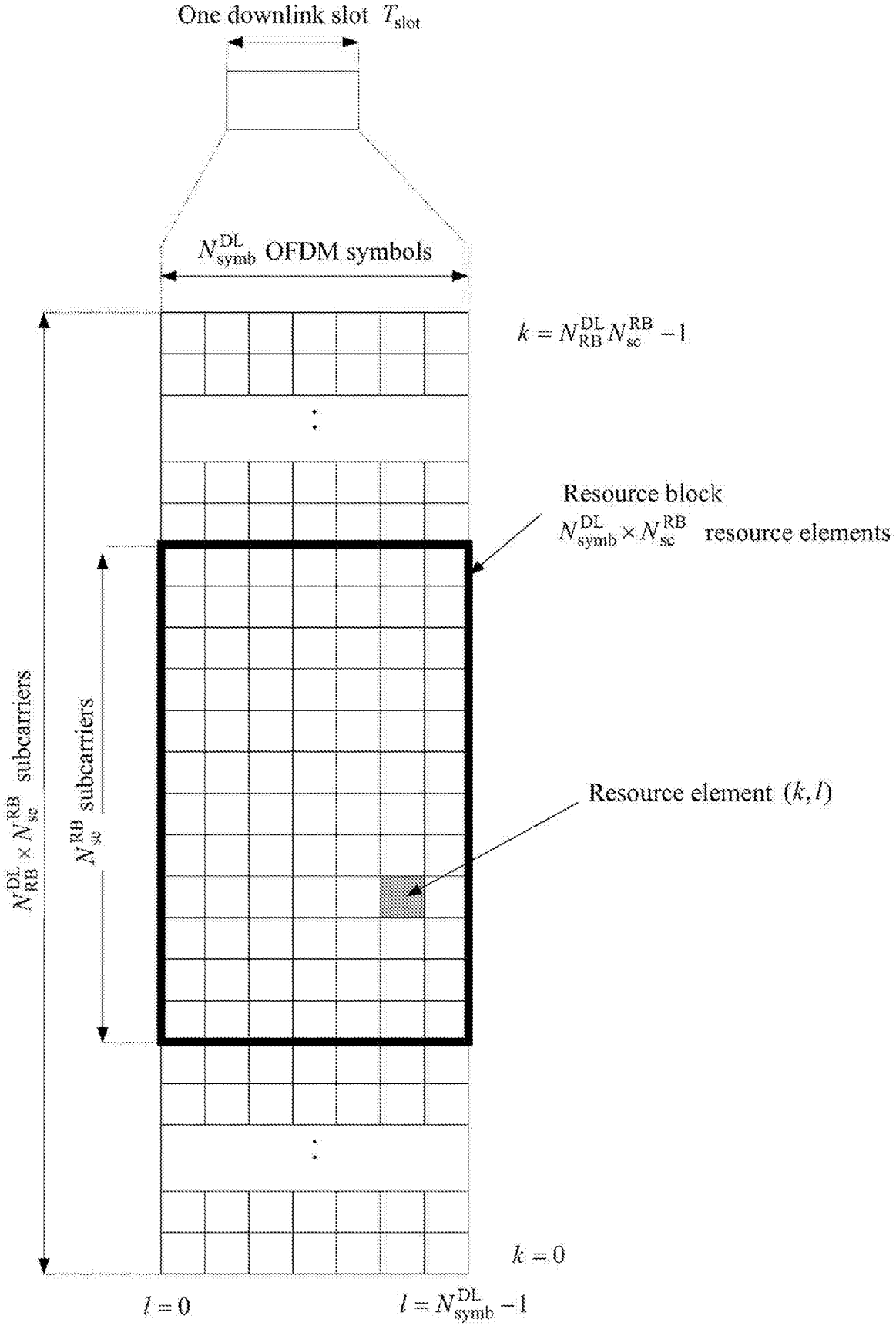
One downlink slot T_{slot}
N_{symb}^{DL} OFDM symbols
$k = N_{RB}^{DL} N_{sc}^{RB} - 1$
Resource block
$N_{symb}^{DL} \times N_{sc}^{RB}$ resource elements
Resource element (k, l)
$N_{RB}^{DL} \times N_{sc}^{RB}$ subcarriers
N_{sc}^{RB} subcarriers
$k = 0$
$l = 0$
$l = N_{symb}^{DL} - 1$

[Fig. 5]

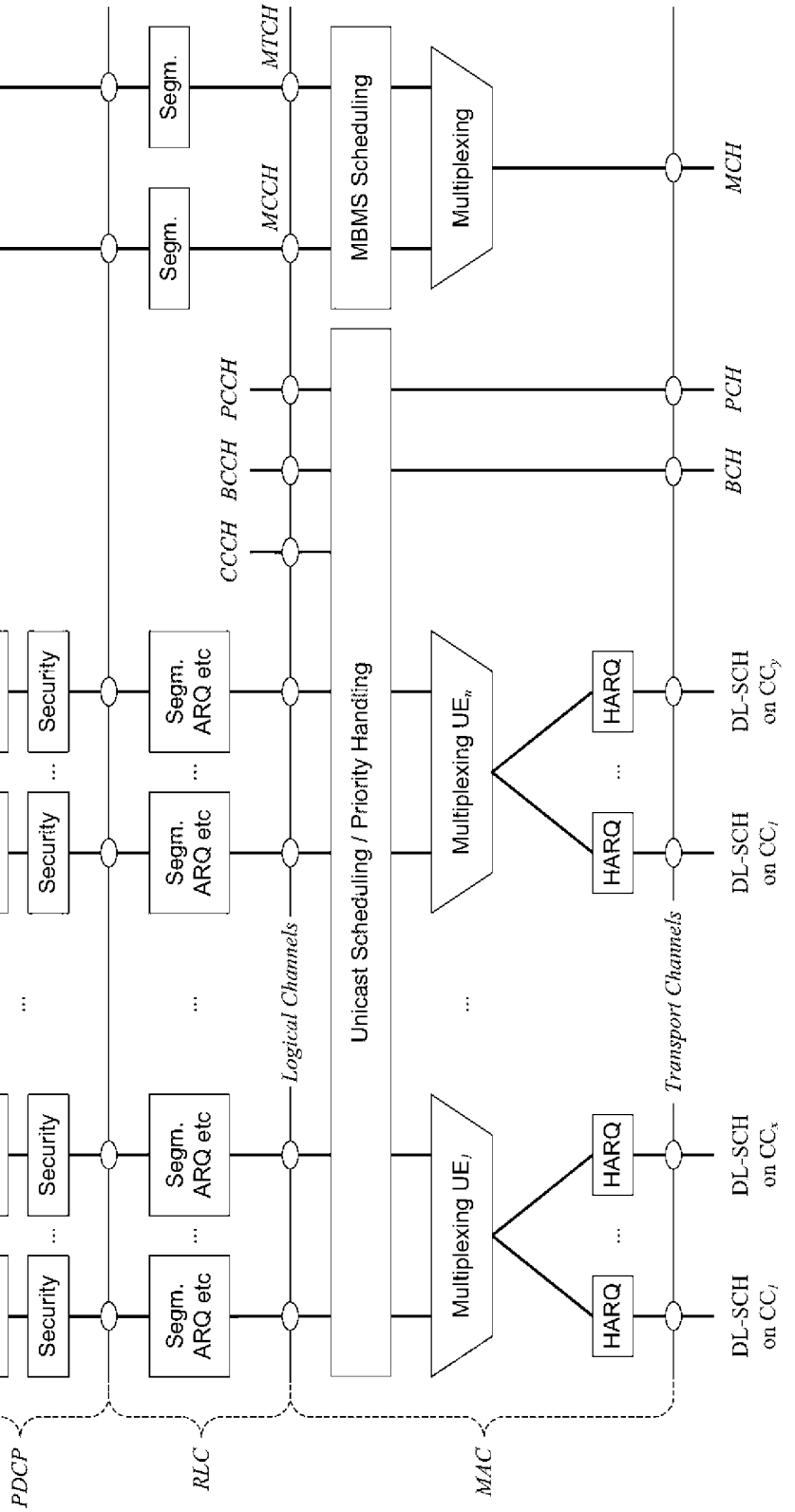
PDCP
RLC
MAC
Radio Bearers
Logical Channels
Transport Channels
ROHC
Security
Segm. ARQ etc
Segm.
MBMS Scheduling
Unicast Scheduling / Priority Handling
Multiplexing
Multiplexing UE1
Multiplexing UEn
HARQ
MTCH
MCCH
CCCH
BCCH
PCCH
MCH
BCH
PCH
DL-SCH on CC1
DL-SCH on CCx
DL-SCH on CCy

[Fig. 6]

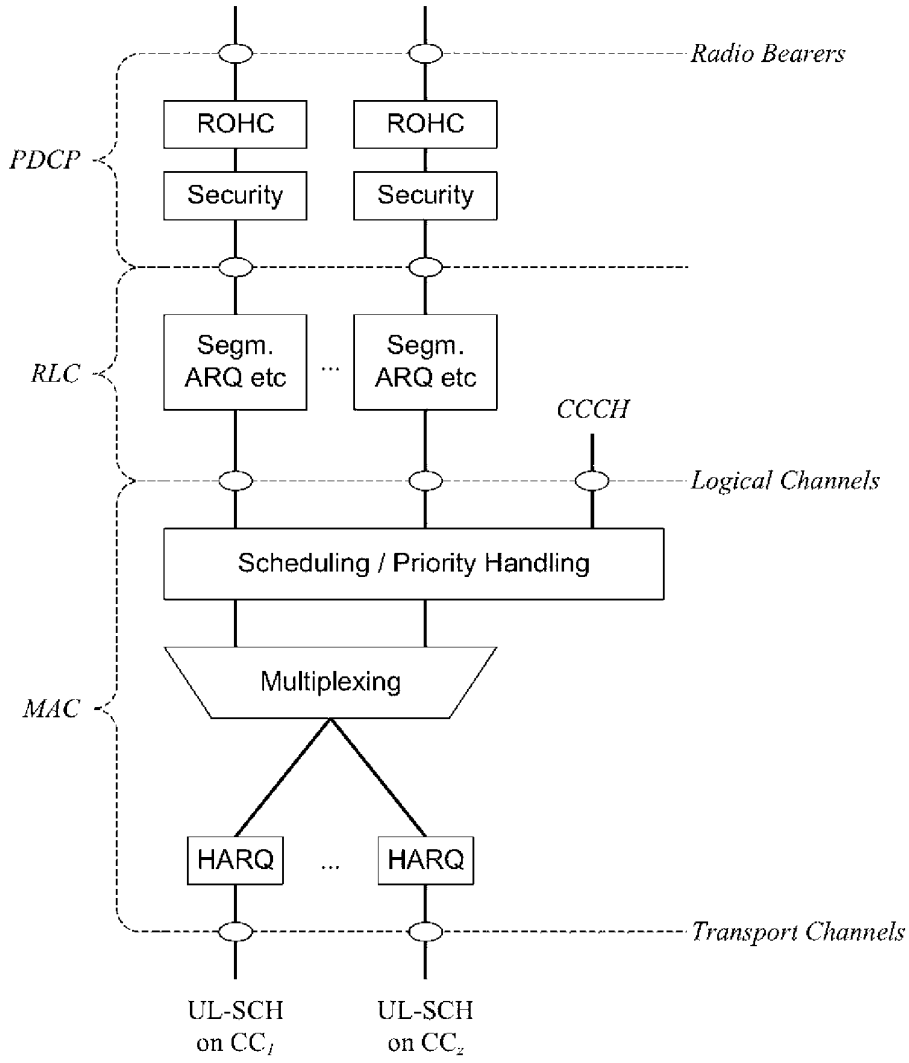
Radio Bearers
PDCP
ROHC
ROHC
Security
Security
RLC
Segm. ARQ etc
...
Segm. ARQ etc
CCCH
Logical Channels
Scheduling / Priority Handling
MAC
Multiplexing
HARQ
...
HARQ
Transport Channels
UL-SCH on CC1
UL-SCH on CC2

[Fig. 7]

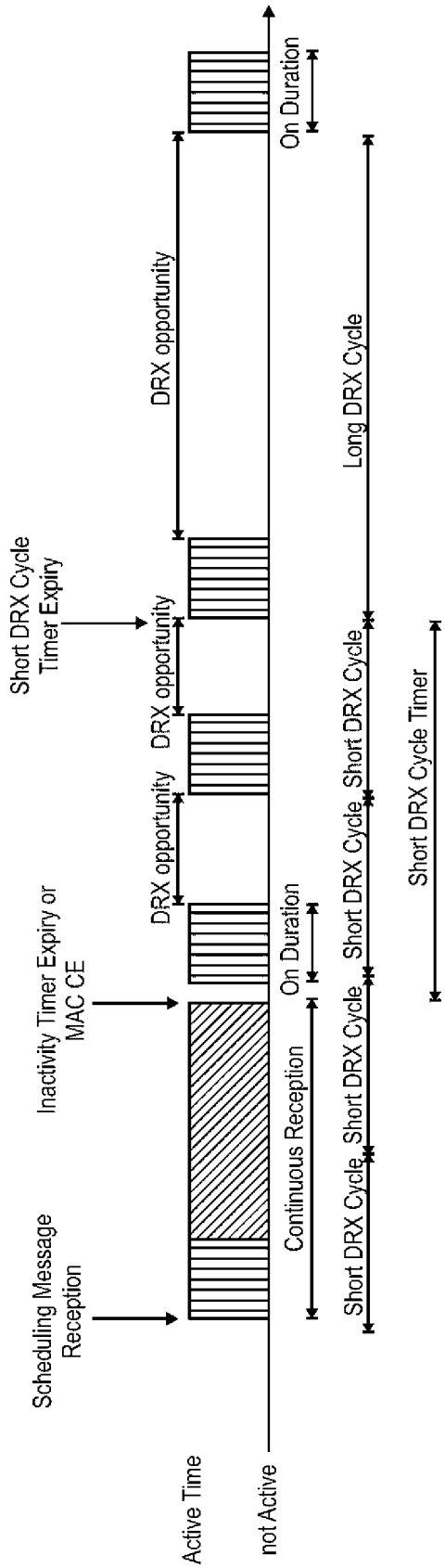
Scheduling Message Reception
Inactivity Timer Expiry or MAC CE
Short DRX Cycle Timer Expiry
Active Time
not Active
Continuous Reception
On Duration
DRX opportunity
DRX opportunity
DRX opportunity
On Duration
Short DRX Cycle
Short DRX Cycle
Short DRX Cycle
Short DRX Cycle
Long DRX Cycle
Short DRX Cycle Timer

[Fig. 8]

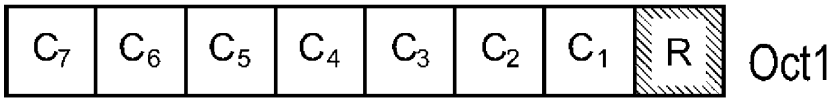

[Fig. 9]

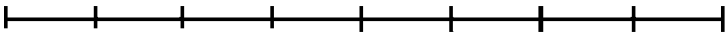

C_7	C_6	C_5	C_4	C_3	C_2	C_1	R
R	V	PH (Type 2, PCell)					
R	R	$P_{CMAX,c}$ 1					
R	V	PH (Type 1, PCell)					
R	R	$P_{CMAX,c}$ 2					
R	V	PH (Type 1, Scell 1)					
R	R	$P_{CMAX,c}$ 3					

...

R	V	PH (Type 1, Scell n)
R	R	$P_{CMAX,c}$ m

[Fig. 10]

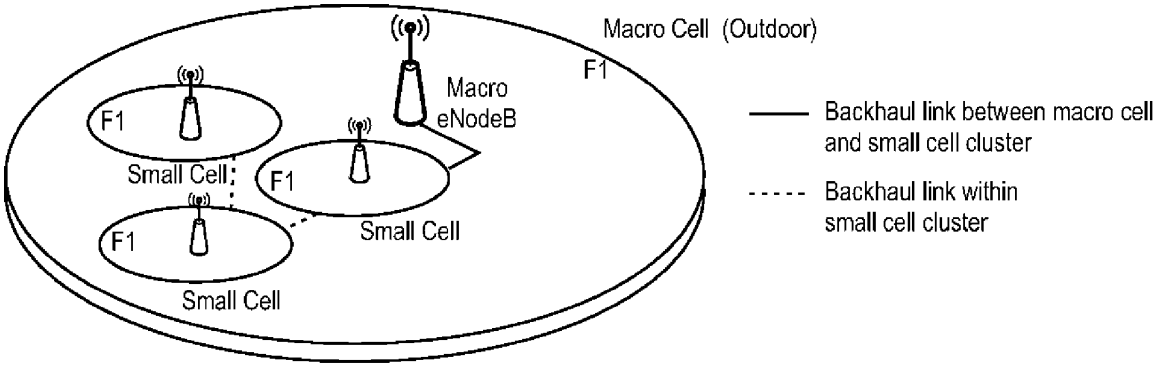

[Fig. 11]

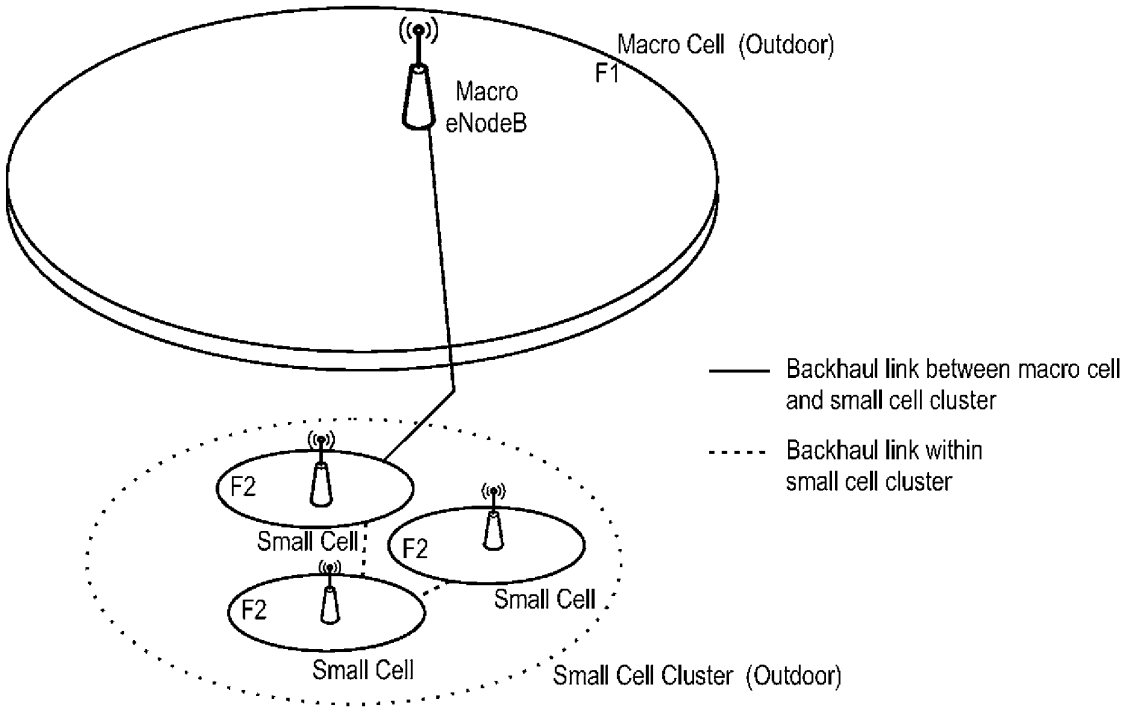
Macro Cell (Outdoor)
F1
Macro
eNodeB
Backhaul link between macro cell and small cell cluster
Backhaul link within small cell cluster
F2
Small Cell
F2
Small Cell
F2
Small Cell
Small Cell Cluster (Outdoor)

[Fig. 12]

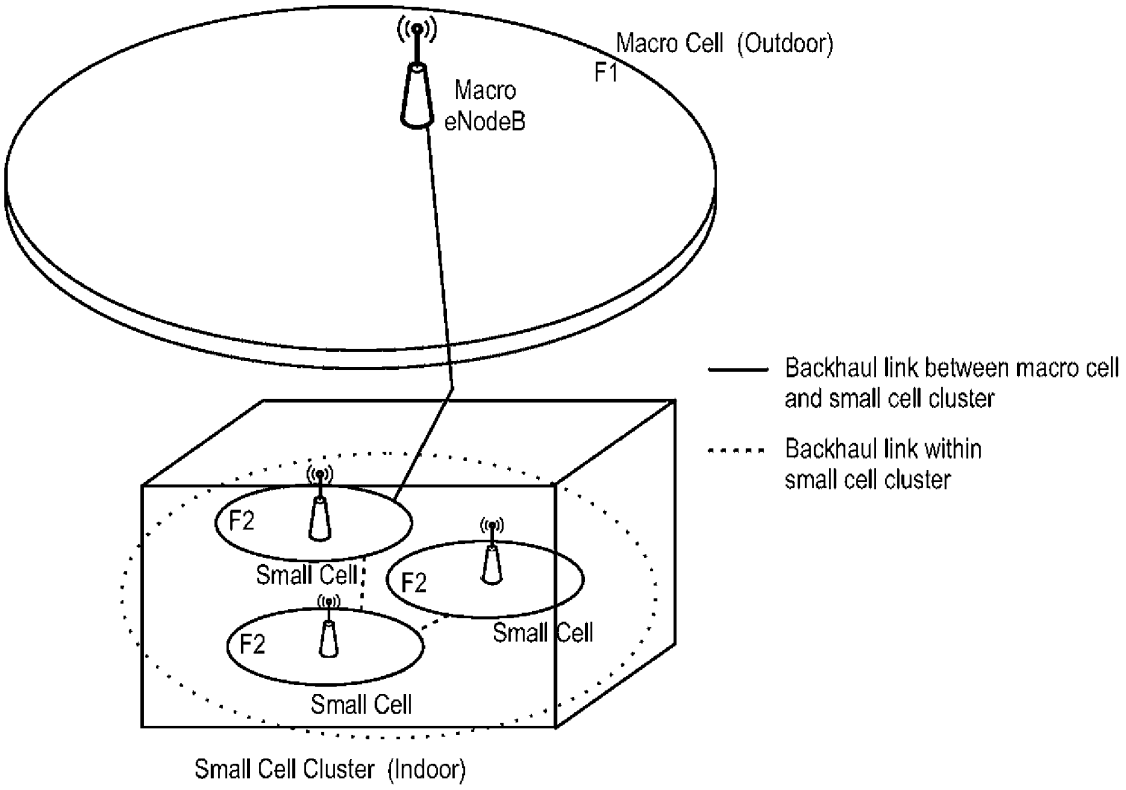
Macro Cell (Outdoor)
F1
Macro
eNodeB
Backhaul link between macro cell and small cell cluster
Backhaul link within small cell cluster
F2
Small Cell
F2
Small Cell
F2
Small Cell
Small Cell Cluster (Indoor)

[Fig. 13]

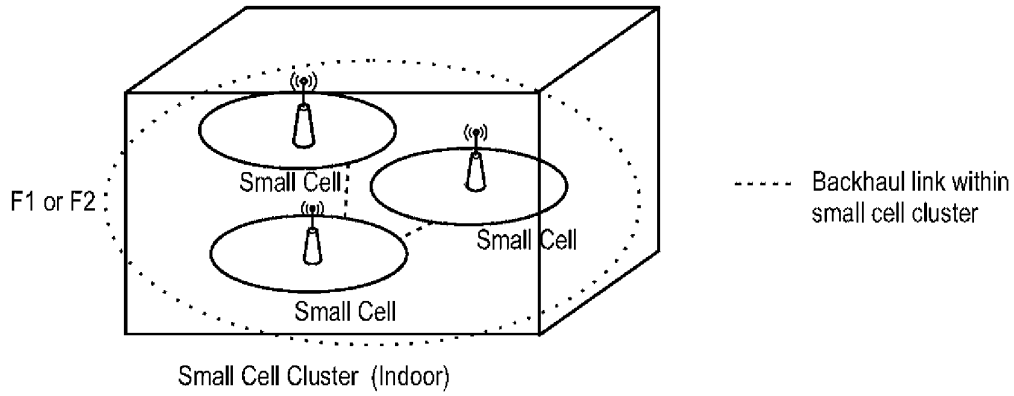
F1 or F2
Small Cell
Small Cell
Small Cell
Small Cell Cluster (Indoor)
Backhaul link within small cell cluster

[Fig. 14]

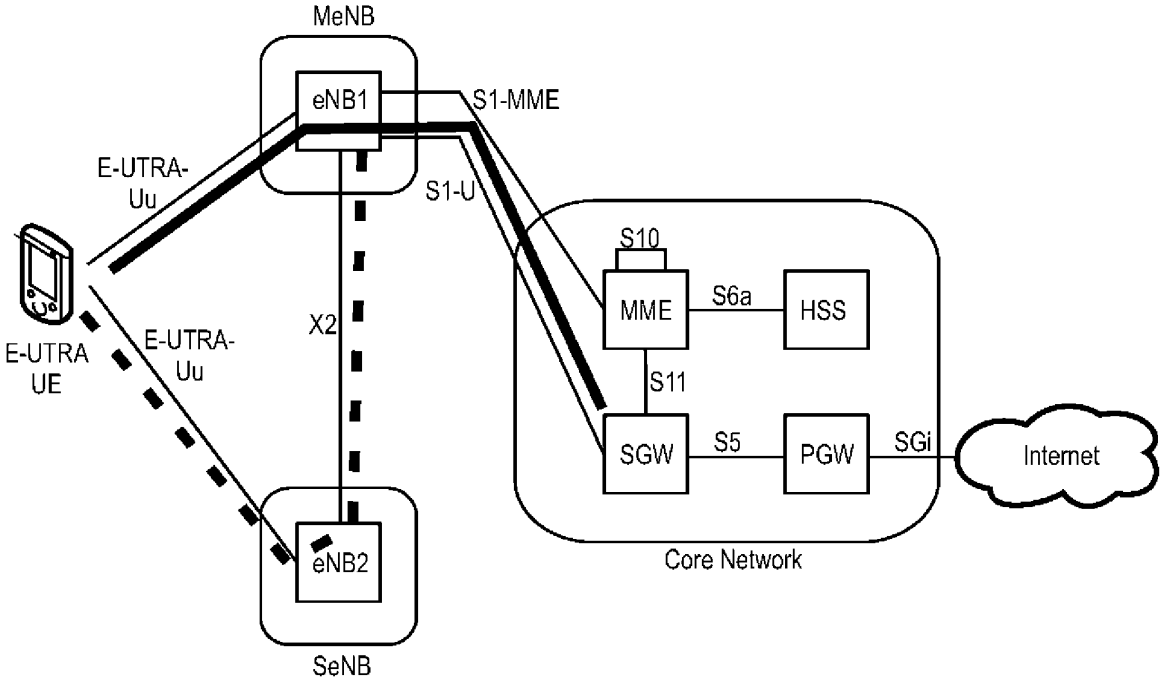
MeNB
eNB1
S1-MME
E-UTRA-Uu
S1-U
S10
MME
S6a
HSS
X2
E-UTRA UE
E-UTRA-Uu
S11
SGW
S5
PGW
SGi
Internet
Core Network
eNB2
SeNB

[Fig. 15]

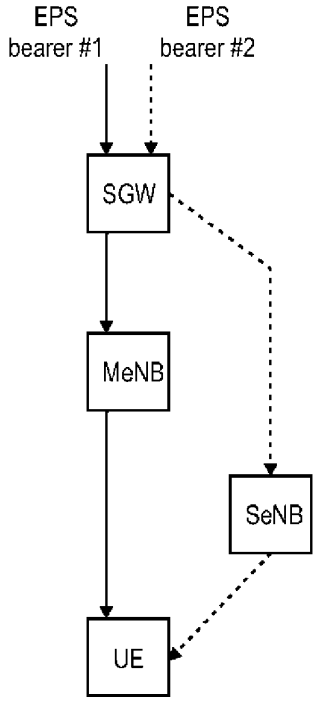

Fig. 15a

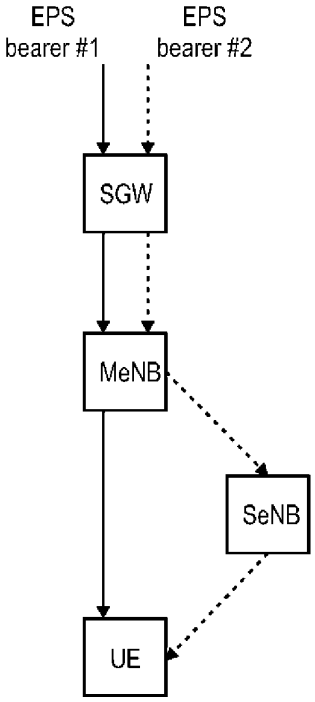

Fig. 15b

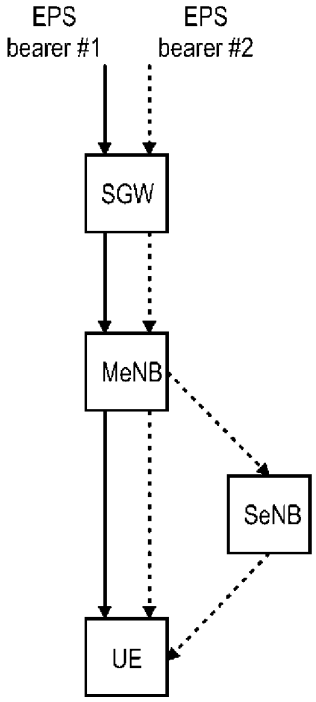

Fig. 15c

[Fig. 16]

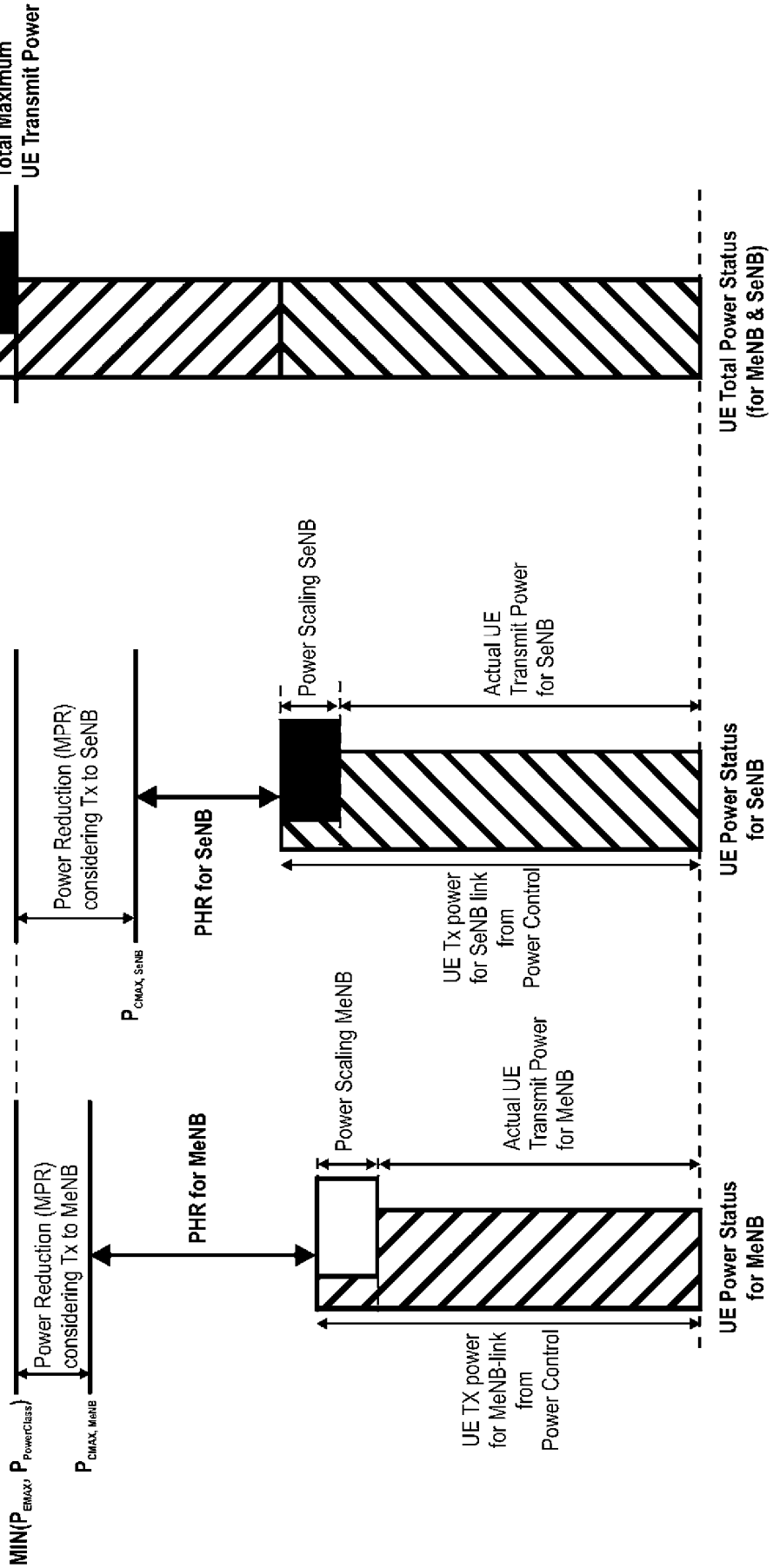
Total Maximum
UE Transmit Power
UE Total Power Status
(for MeNB & SeNB)
Power Scaling SeNB
Actual UE
Transmit Power
for SeNB
UE Power Status
for SeNB
Power Reduction (MPR)
considering Tx to SeNB
PHR for SeNB
UE Tx power
for SeNB link
from
Power Control
Power Scaling MeNB
Actual UE
Transmit Power
for MeNB
UE Power Status
for MeNB
Power Reduction (MPR)
considering Tx to MeNB
PHR for MeNB
UE TX power
for MeNB-link
from
Power Control

[Fig. 17]

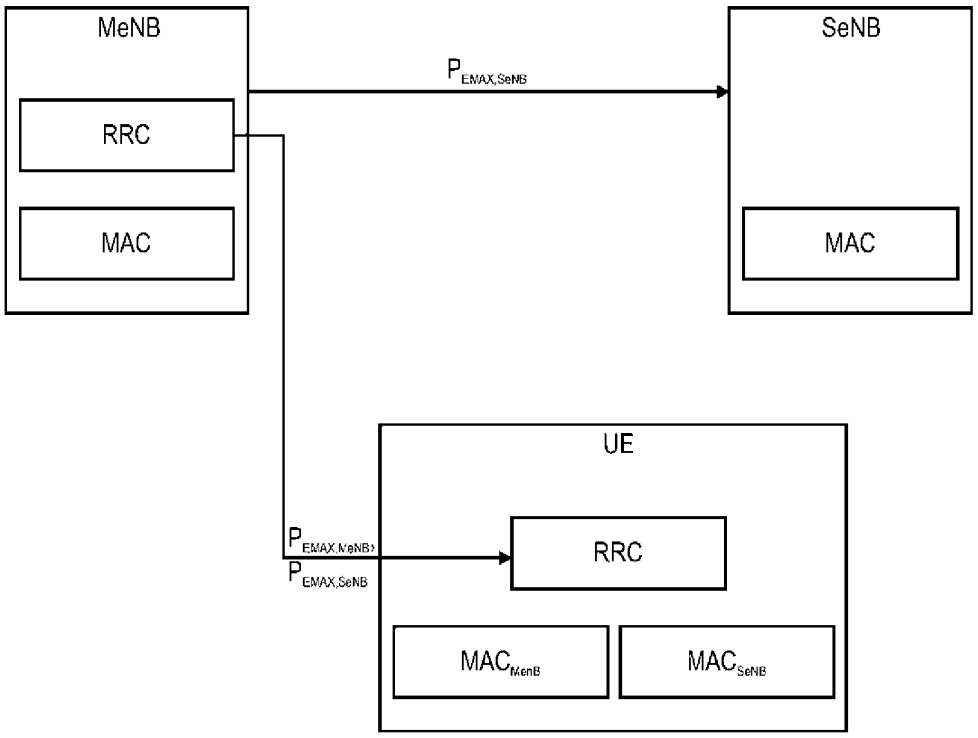
MeNB
RRC
MAC
SeNB
MAC
$P_{EMAX,SeNB}$
UE
RRC
MAC_{MeNB}
MAC_{SeNB}
$P_{EMAX,MeNB}$
$P_{EMAX,SeNB}$

[Fig. 18]

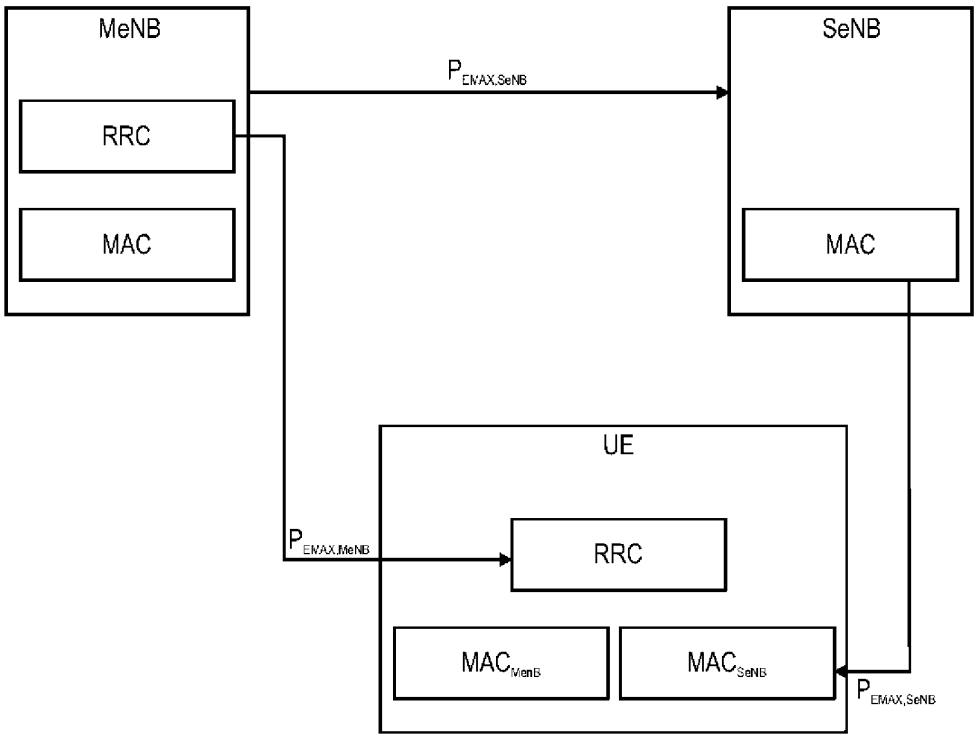
MeNB
RRC
MAC
SeNB
MAC
$P_{EMAX,SeNB}$
UE
RRC
MAC_{MeNB}
MAC_{SeNB}
$P_{EMAX,MeNB}$
$P_{EMAX,SeNB}$

[Fig. 19]

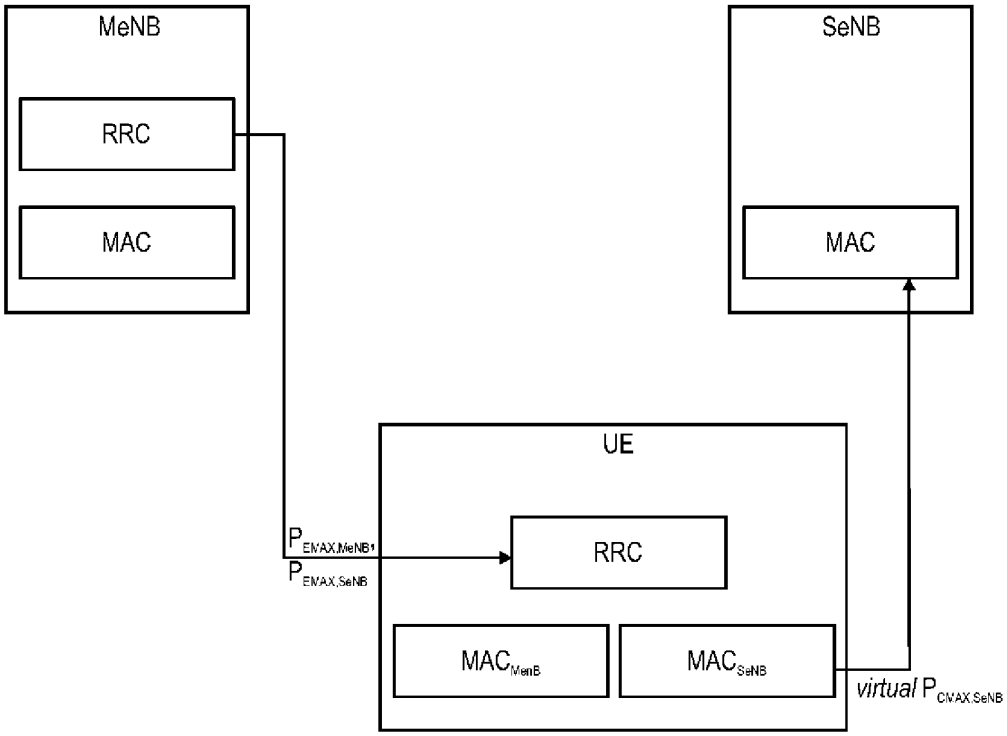

[Fig. 20]

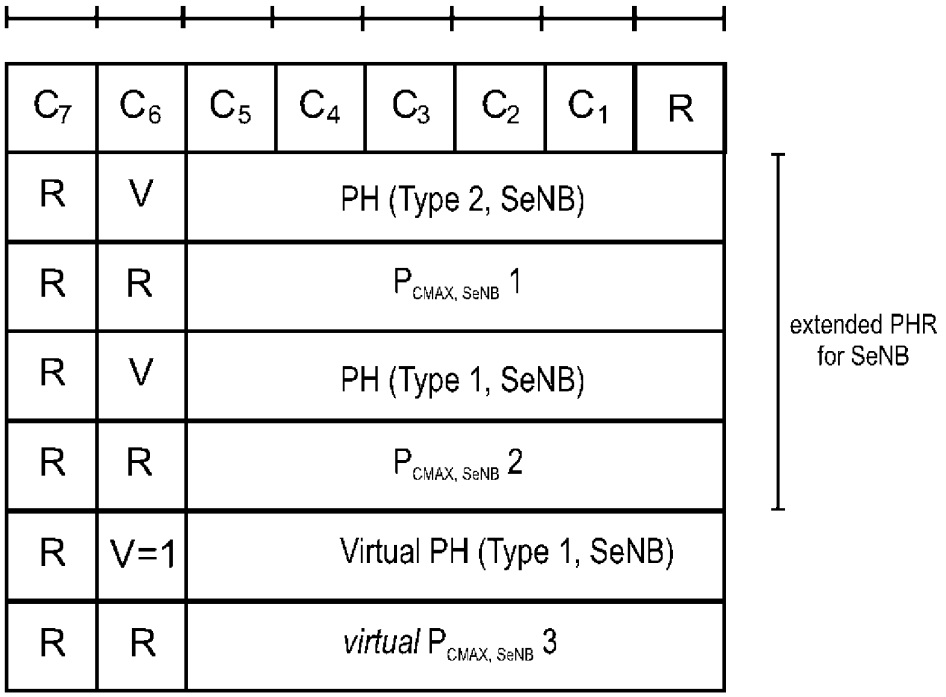

C_7	C_6	C_5	C_4	C_3	C_2	C_1	R
R	V	PH (Type 2, SeNB)					
R	R	$P_{CMAX,\ SeNB}$ 1					
R	V	PH (Type 1, SeNB)					
R	R	$P_{CMAX,\ SeNB}$ 2					
R	V=1	Virtual PH (Type 1, SeNB)					
R	R	*virtual* $P_{CMAX,\ SeNB}$ 3					

[Fig. 21]

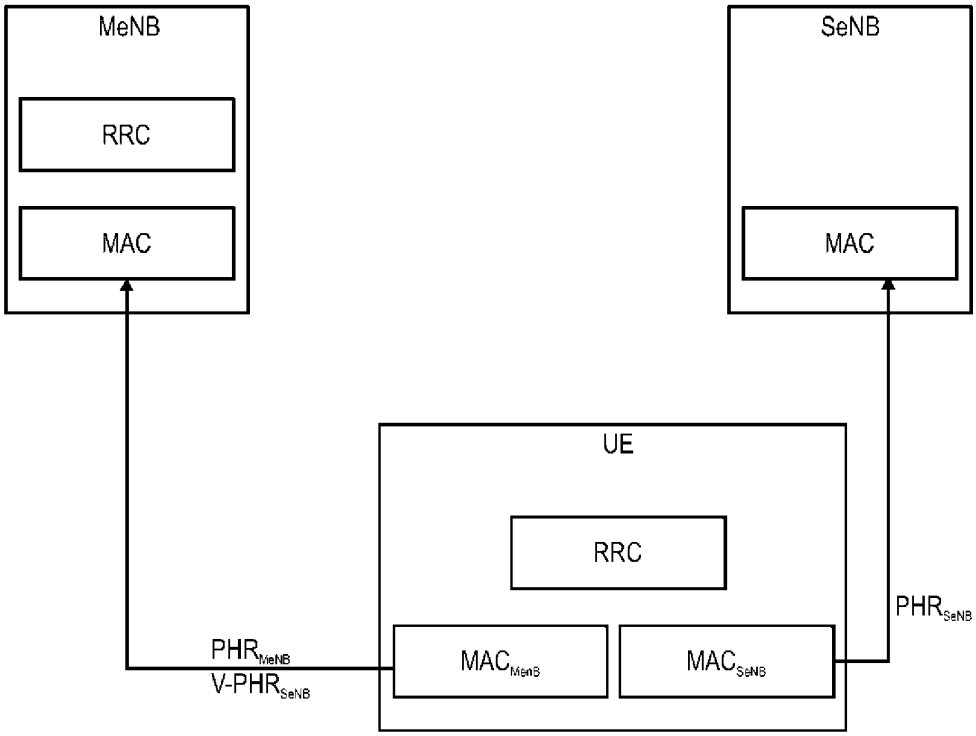
MeNB
RRC
MAC
SeNB
MAC
UE
RRC
PHR_SeNB
PHR_MeNB
V-PHR_SeNB
MAC_MeNB
MAC_SeNB

[Fig. 22]

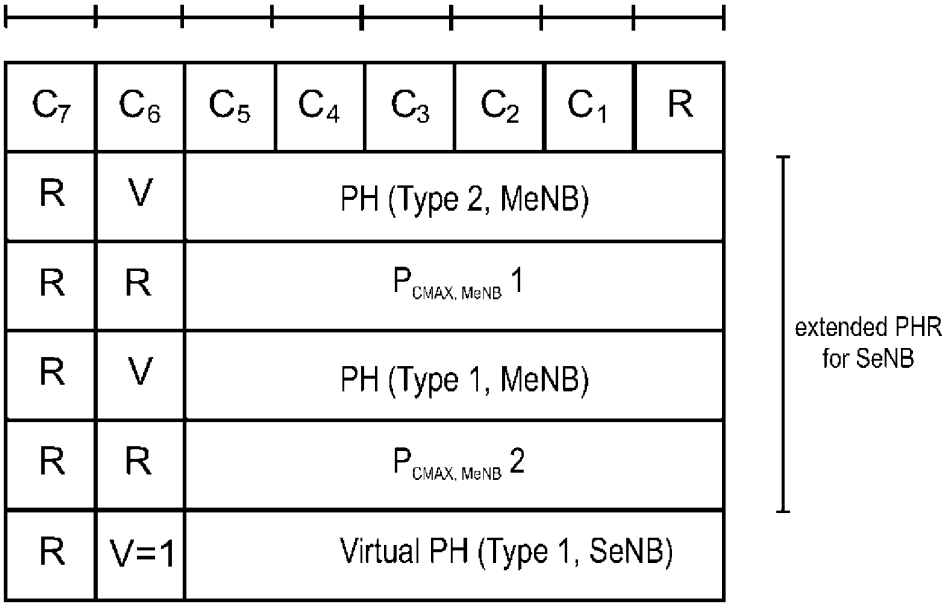
C7 C6 C5 C4 C3 C2 C1 R
R V PH (Type 2, MeNB)
R R P CMAX, MeNB 1
R V PH (Type 1, MeNB)
R R P CMAX, MeNB 2
R V=1 Virtual PH (Type 1, SeNB)
extended PHR for SeNB

[Fig. 23]

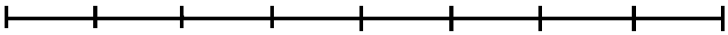

C_7	C_6	C_5	C_4	C_3	C_2	C_1	R
R	V	PH (Type 2, SeNB)					
R	R	$P_{CMAX, SeNB}$ 1					
R	V	PH (Type 1, SeNB)					
R	R	$P_{CMAX, SeNB}$ 2					