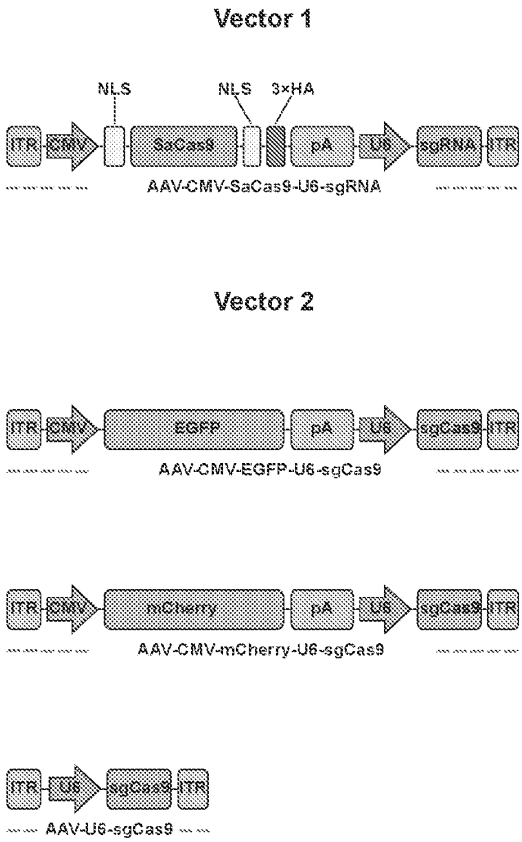
Vector 1
NLS
NLS
3×HA
ITR
CMV
SaCas9
pA
U6
sgRNA
ITR
AAV-CMV-SaCas9-U6-sgRNA
Vector 2
ITR
CMV
EGFP
pA
U6
sgCas9
ITR
AAV-CMV-EGFP-U6-sgCas9
ITR
CMV
mCherry
pA
U6
sgCas9
ITR
AAV-CMV-mCherry-U6-sgCas9
ITR
U6
sgCas9
ITR
AAV-U6-sgCas9

Fig. 1

Fig. 2

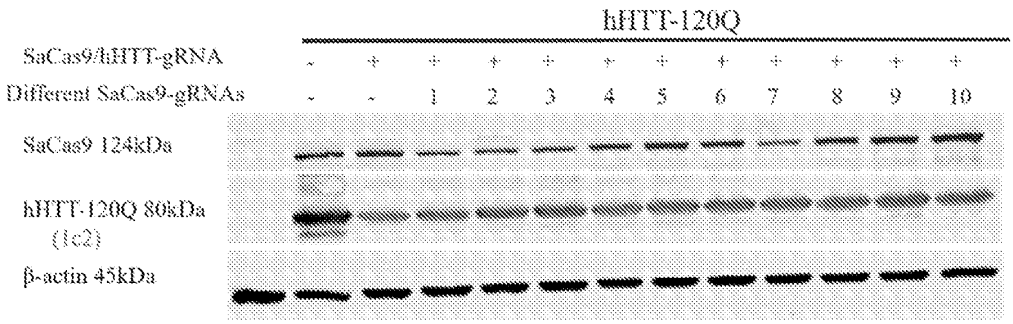
hHTT-120Q
SaCas9/hHTT-gRNA
- + + + + + + + + + + +
Different SaCas9-gRNAs
- - 1 2 3 4 5 6 7 8 9 10
SaCas9 124kDa
hHTT-120Q 80kDa
(1c2)
β-actin 45kDa

Fig. 3A

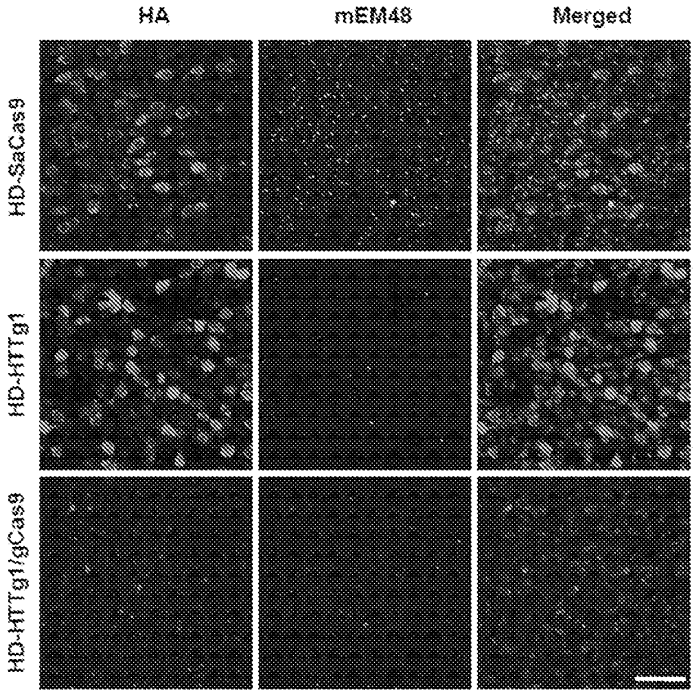
HA
mEM48
Merged
HD-SaCas9
HD-HTTg1
HD-HTTg1/gCas9

Fig. 3B

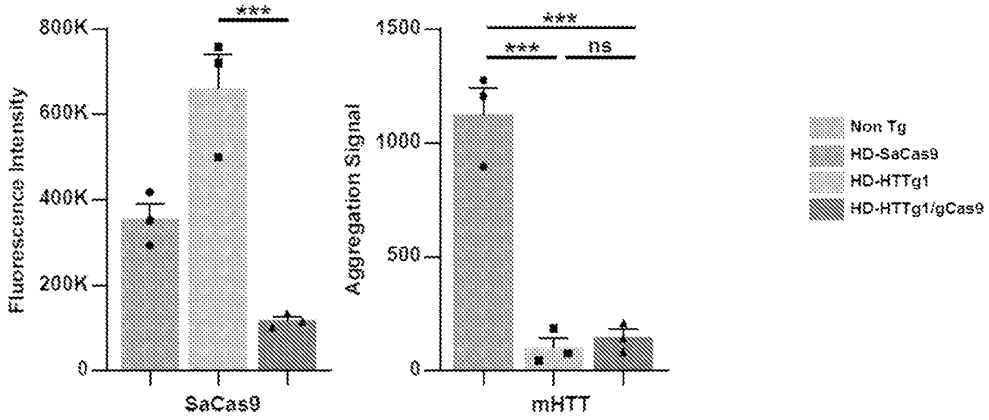
Fluorescence Intensity
800K
600K
400K
200K
0
***
SaCas9
Aggregation Signal
1500
1000
500
0
***
***
ns
mHTT
Non Tg
HD-SaCas9
HD-HTTg1
HD-HTTg1/gCas9

Fig. 4A

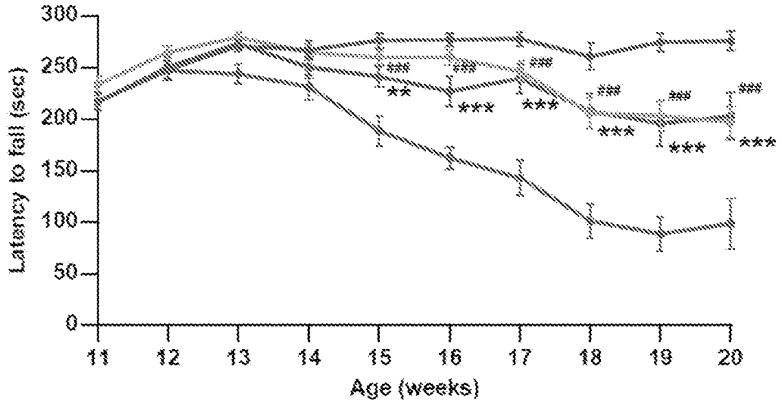
Latency to fall (sec)
300
250
200
150
100
50
0
11
12
13
14
15
16
17
18
19
20
Age (weeks)

Fig. 4B

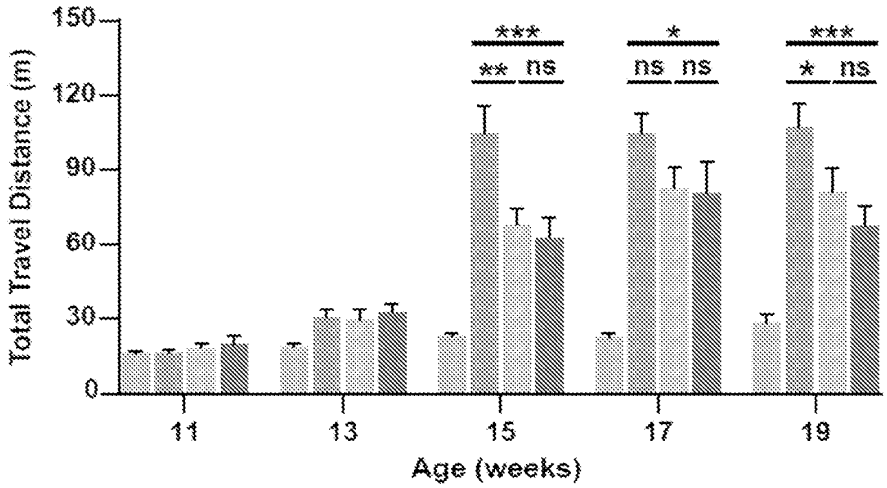
Total Travel Distance (m)
150
120
90
60
30
0
***
**
ns
*
ns
ns
***
*
ns
11
13
15
17
19
Age (weeks)