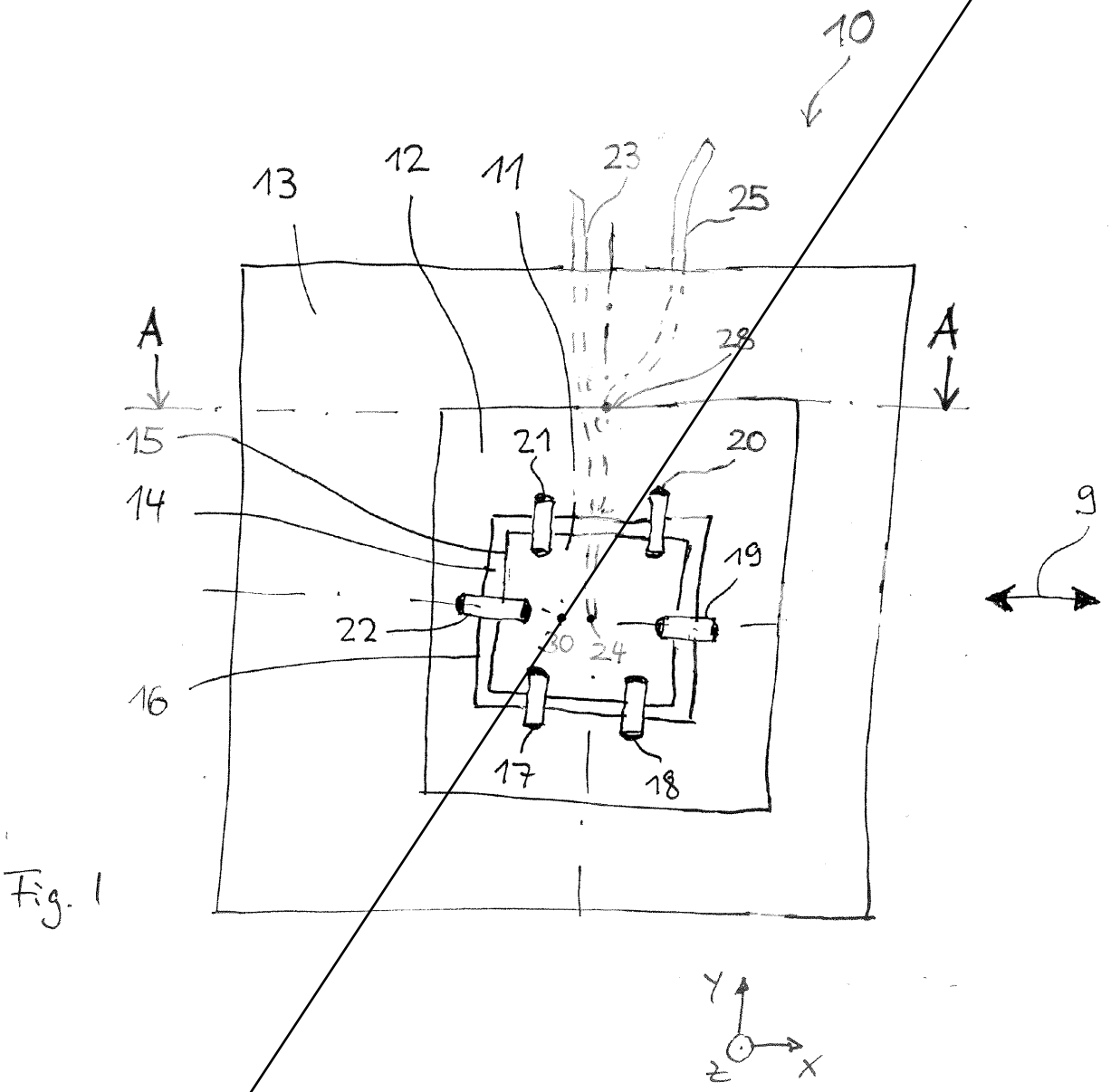

Fig. 1

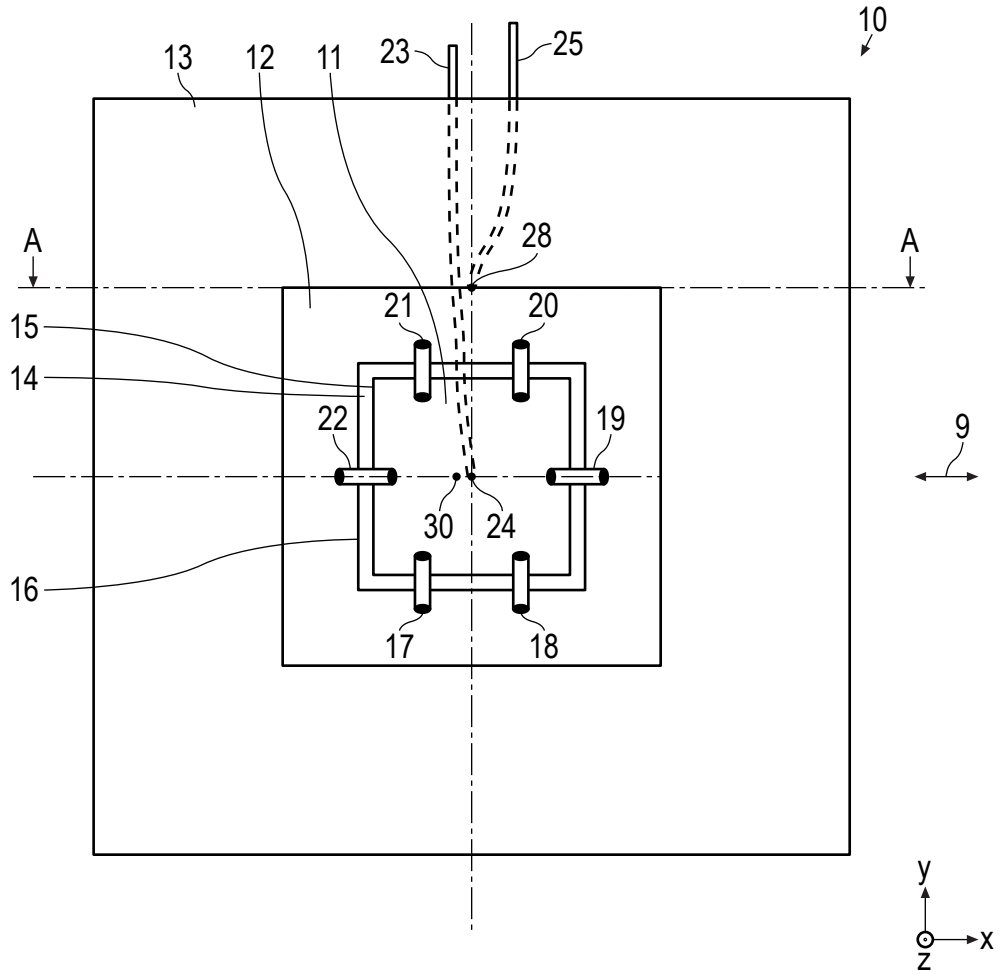

FIG. 1

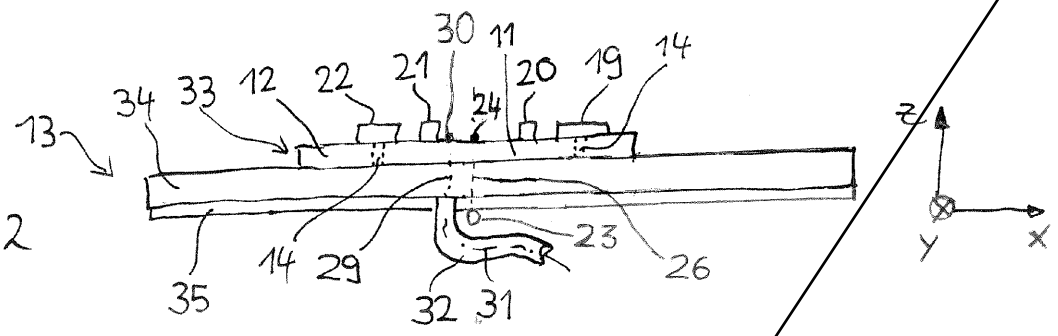

Fig.2

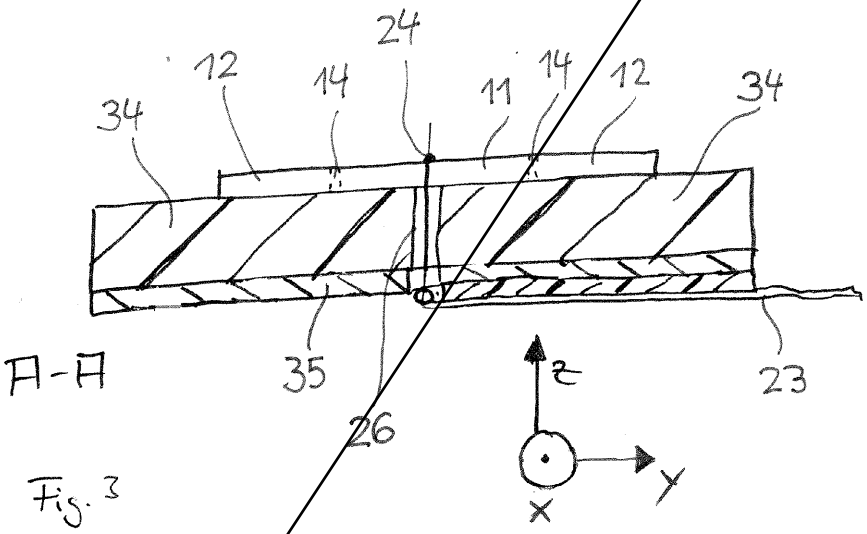

A-A

Fig.3

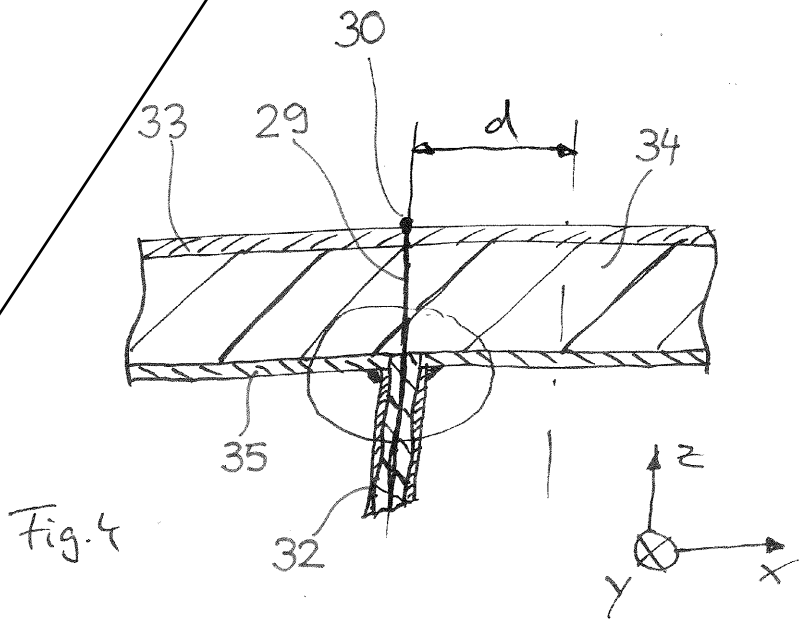

Fig.4

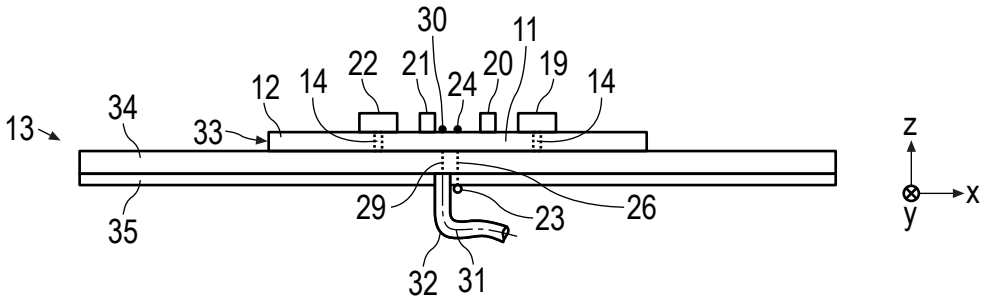

FIG. 2

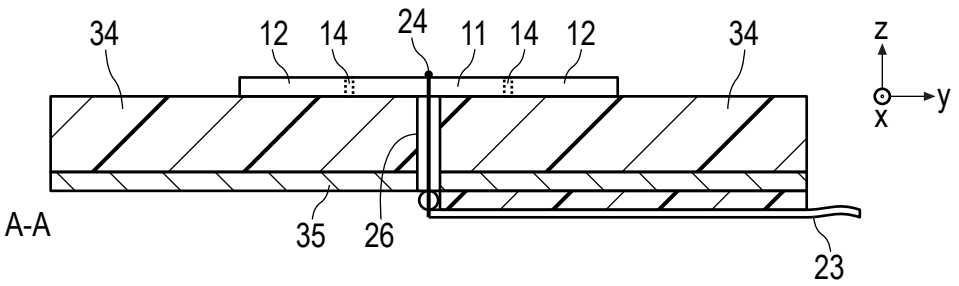

FIG. 3

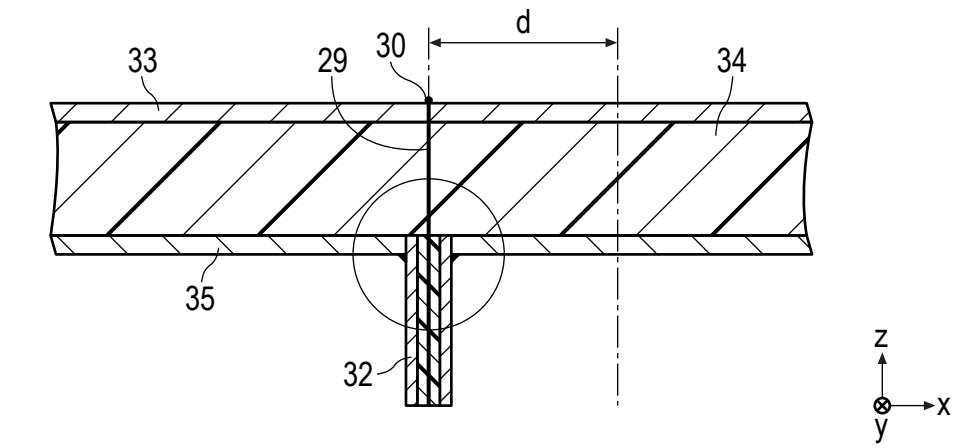

FIG. 4

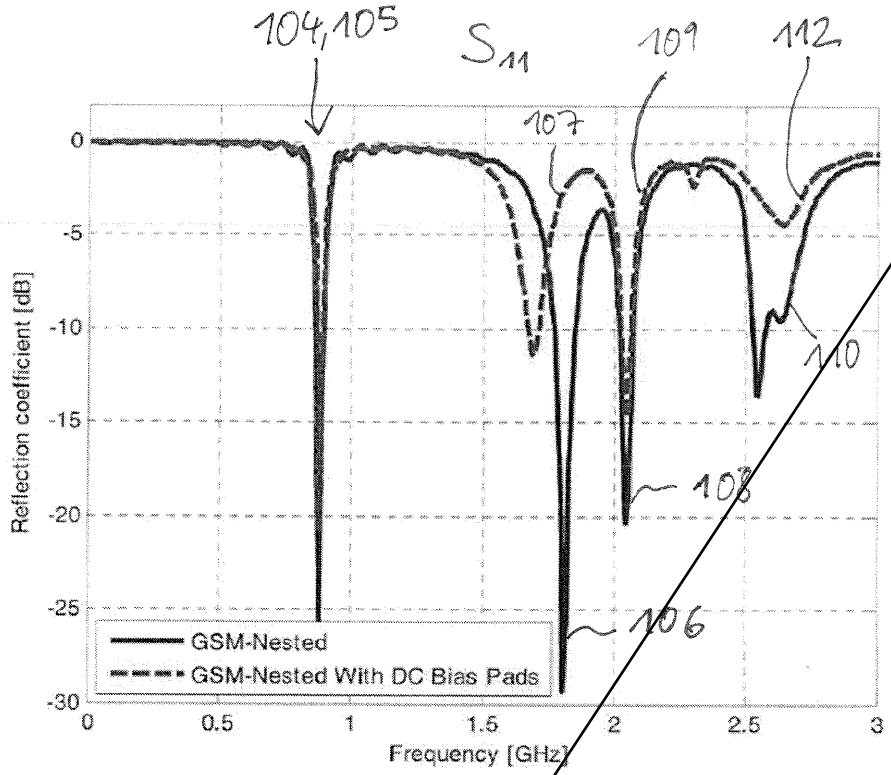
104,105
S11
109
112
107
110
108
106
GSM-Nested
GSM-Nested With DC Bias Pads
Reflection coefficient [dB]
Frequency [GHz]
0
-5
-10
-15
-20
-25
-30
0
0.5
1
1.5
2
2.5
3

Fig. 15

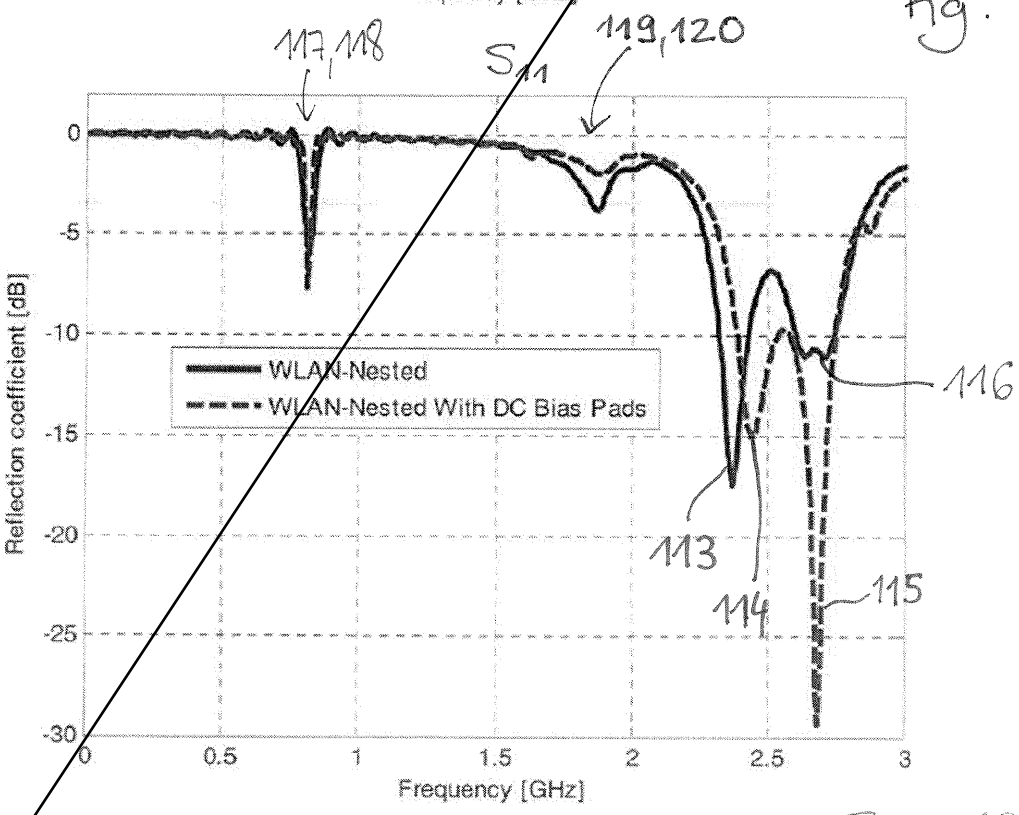
117,118
S11
119,120
116
113
114
115
WLAN-Nested
WLAN-Nested With DC Bias Pads
Reflection coefficient [dB]
Frequency [GHz]
0
-5
-10
-15
-20
-25
-30
0
0.5
1
1.5
2
2.5
3

Fig. 16

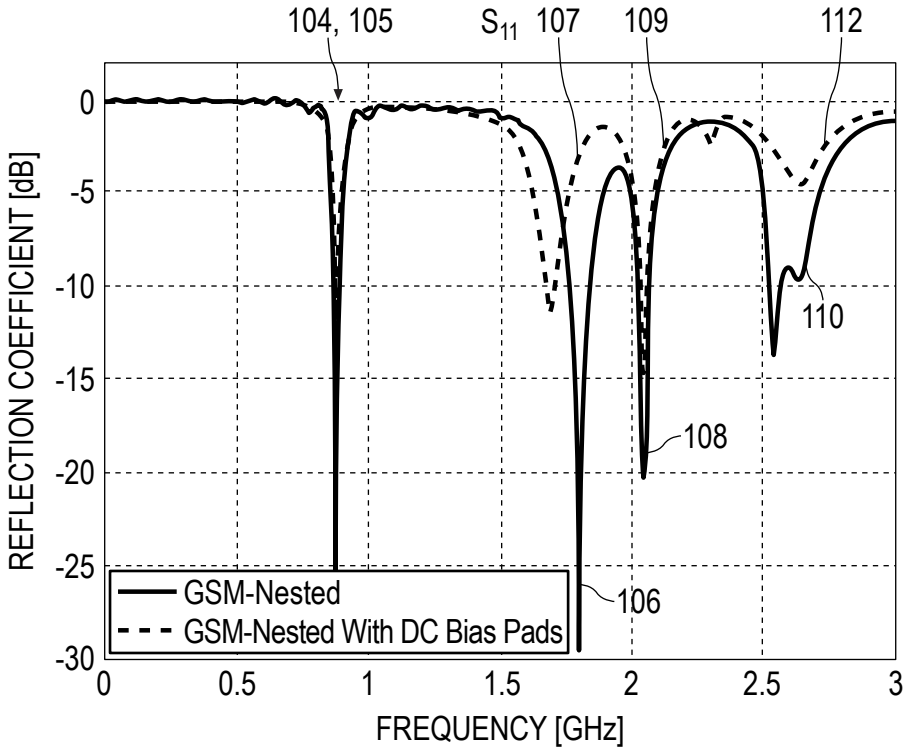
104, 105
S_{11}
107
109
112
110
108
106
REFLECTION COEFFICIENT [dB]
FREQUENCY [GHz]
GSM-Nested
GSM-Nested With DC Bias Pads
0
-5
-10
-15
-20
-25
-30
0
0.5
1
1.5
2
2.5
3

FIG. 15

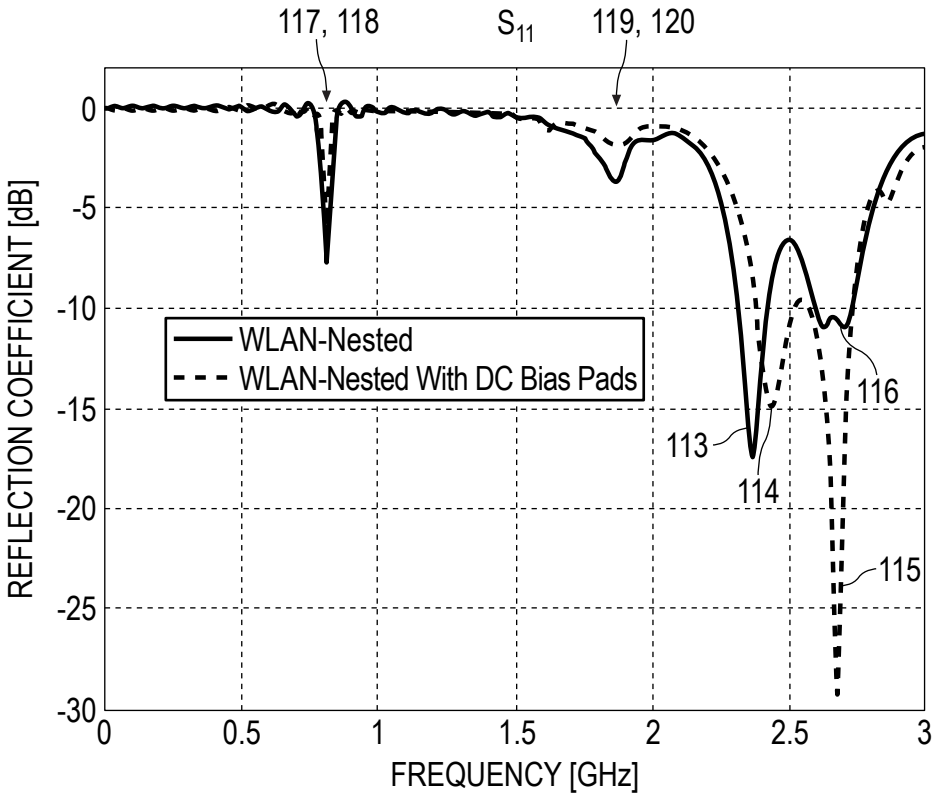
117, 118
S_{11}
119, 120
116
113
114
115
REFLECTION COEFFICIENT [dB]
FREQUENCY [GHz]
WLAN-Nested
WLAN-Nested With DC Bias Pads
0
-5
-10
-15
-20
-25
-30
0
0.5
1
1.5
2
2.5
3

FIG. 16

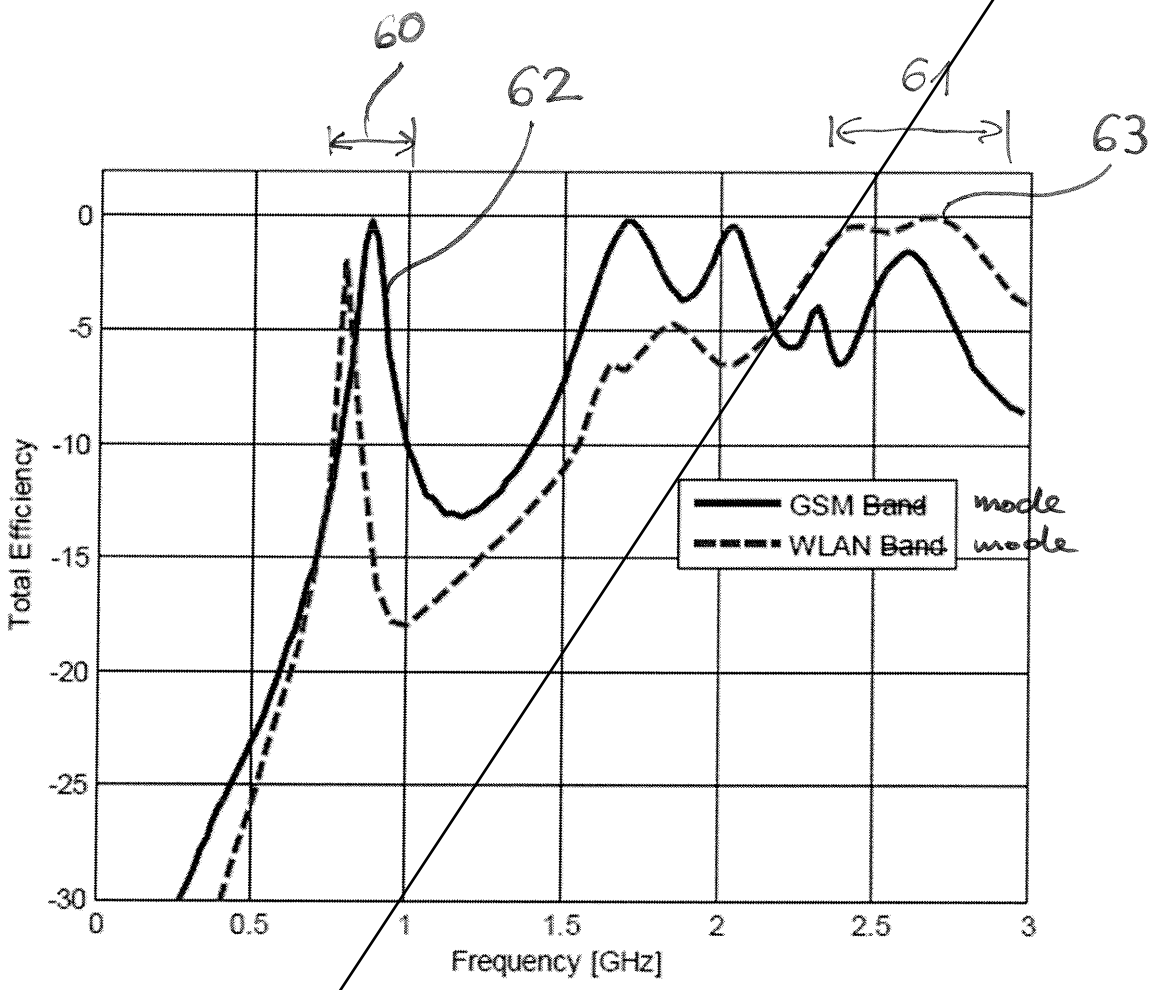
60
62
61
63
0
-5
-10
-15
-20
-25
-30
Total Efficiency
0
0.5
1
1.5
2
2.5
3
Frequency [GHz]
GSM Band mode
WLAN Band mode

Fig. 20

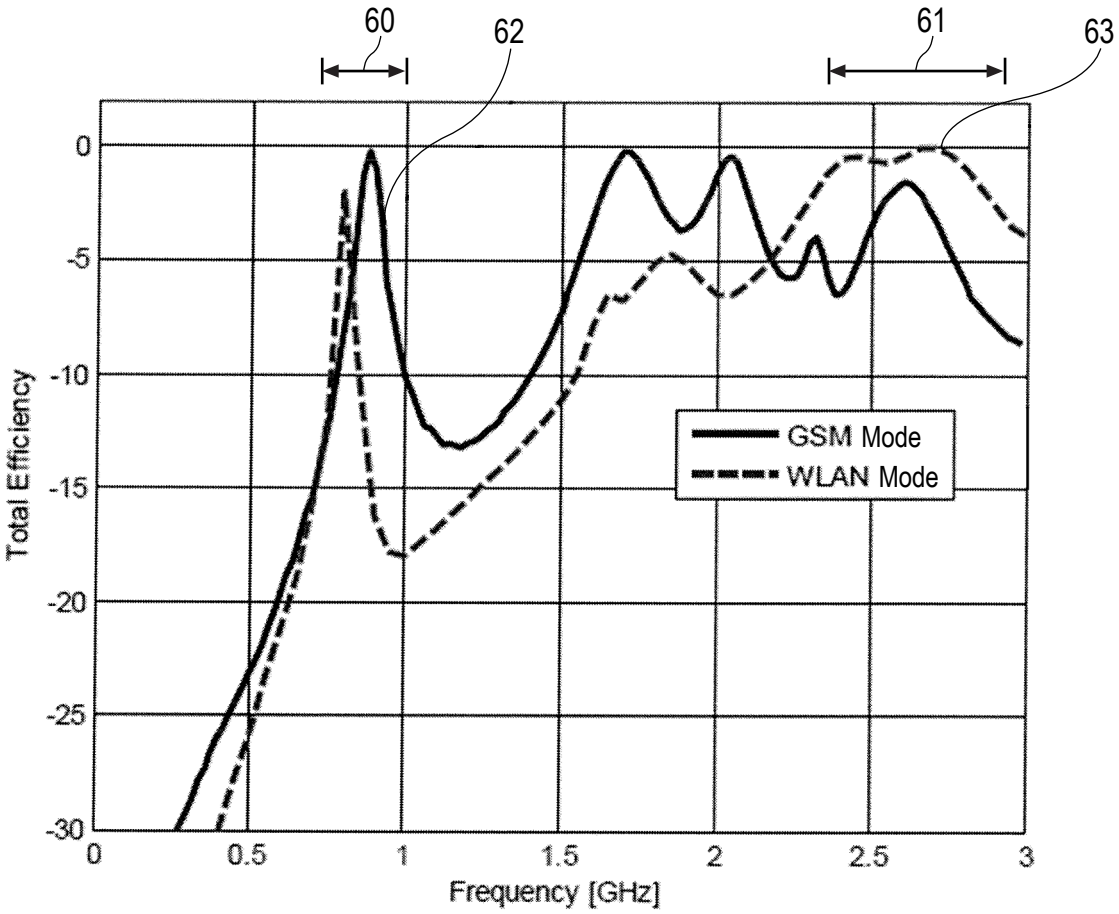
60
62
61
63
0
-5
-10
-15
-20
-25
-30
Total Efficiency
0
0.5
1
1.5
2
2.5
3
Frequency [GHz]
GSM Mode
WLAN Mode

FIG. 20

E-Plane Radiation Pattern

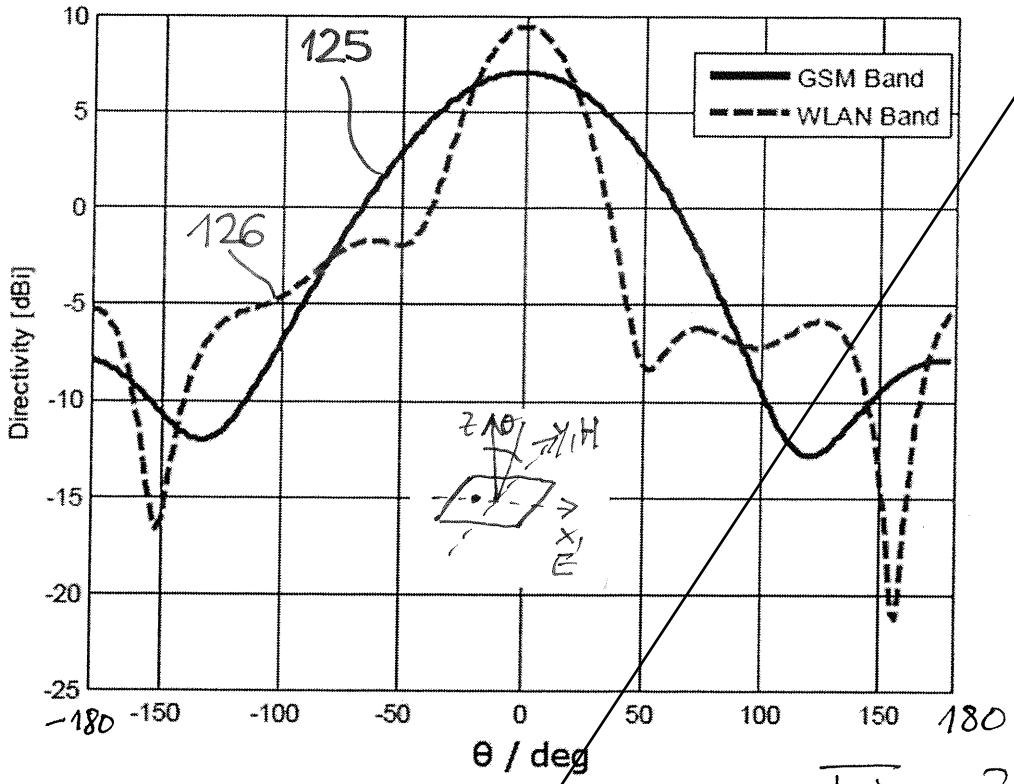

Fig. 21

H-Plane Radiation Pattern

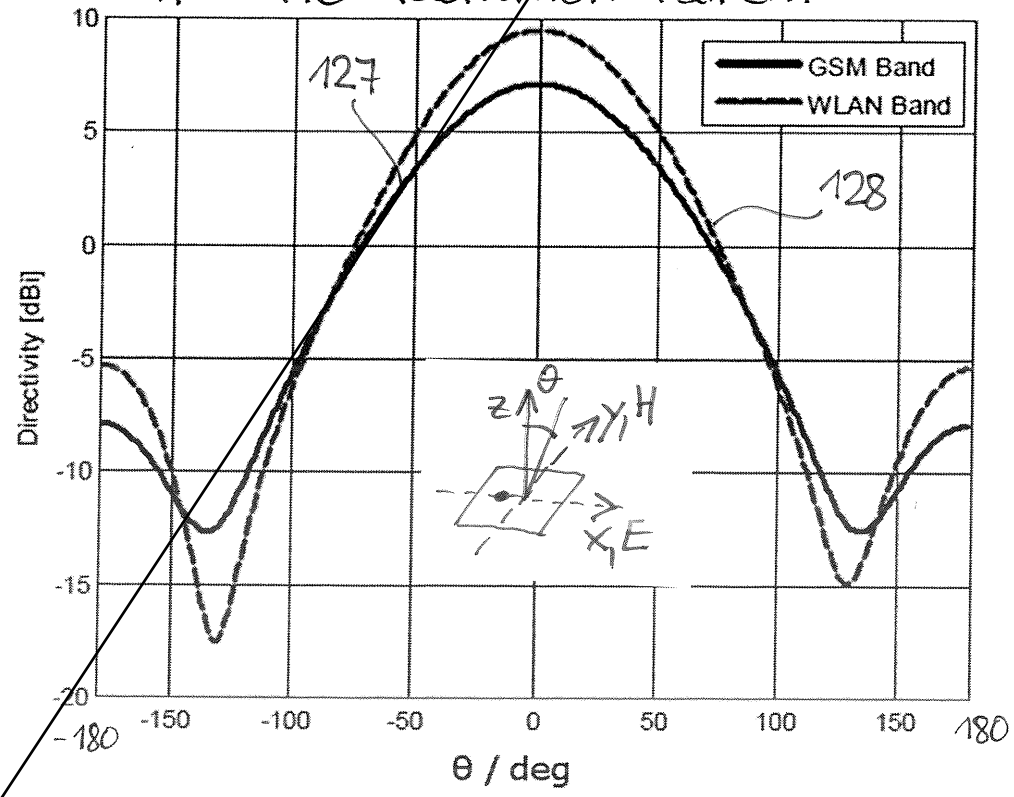

Fig. 22

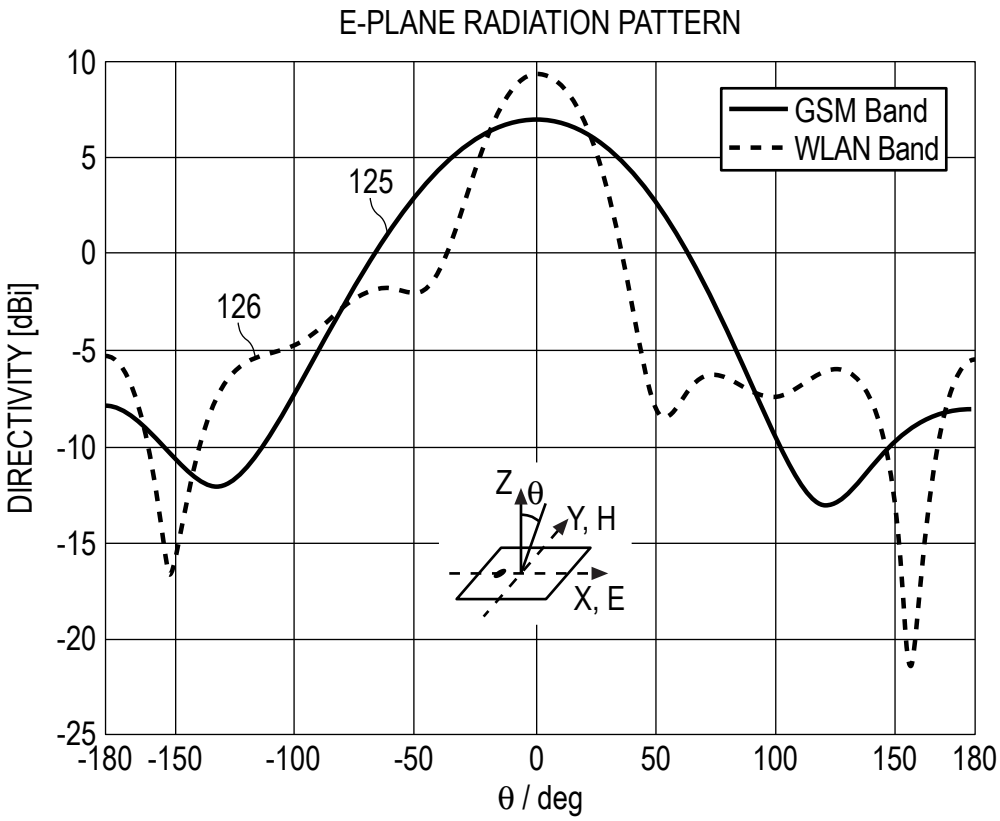
E-PLANE RADIATION PATTERN
GSM Band
WLAN Band
125
126
DIRECTIVITY [dBi]
10
5
0
-5
-10
-15
-20
-25
-180 -150 -100 -50 0 50 100 150 180
θ / deg
Z
θ
Y, H
X, E

FIG. 21

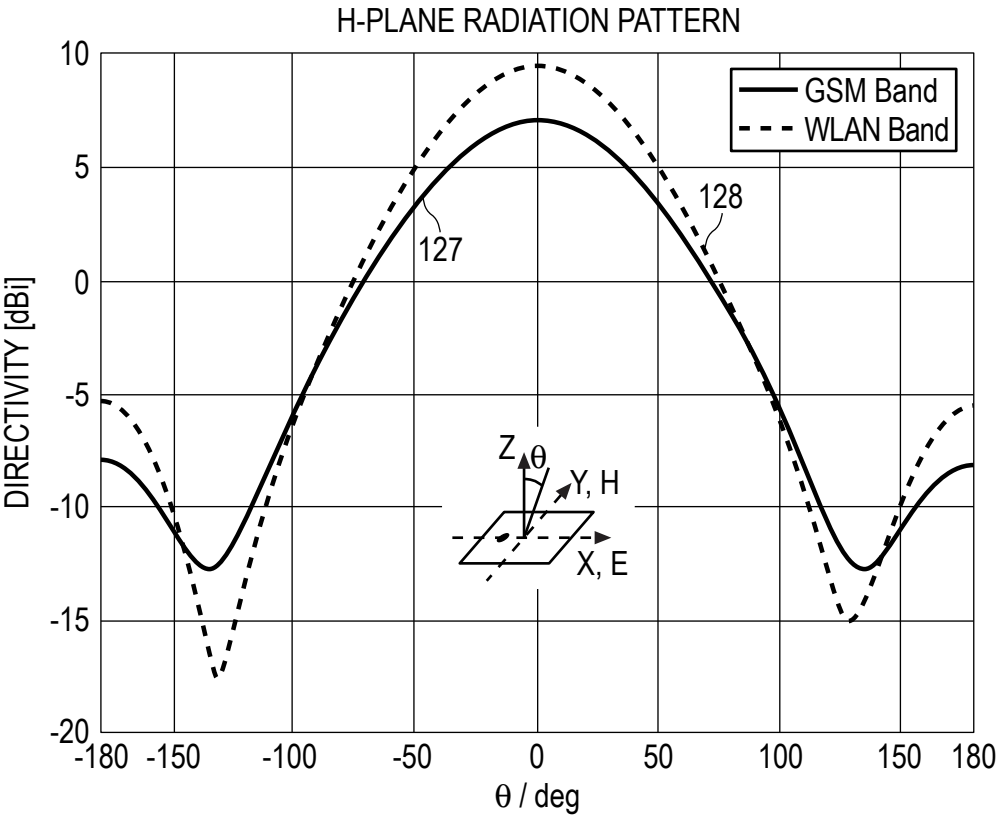
H-PLANE RADIATION PATTERN
GSM Band
WLAN Band
127
128
DIRECTIVITY [dBi]
10
5
0
-5
-10
-15
-20
-180 -150 -100 -50 0 50 100 150 180
θ / deg
Z
θ
Y, H
X, E

FIG. 22

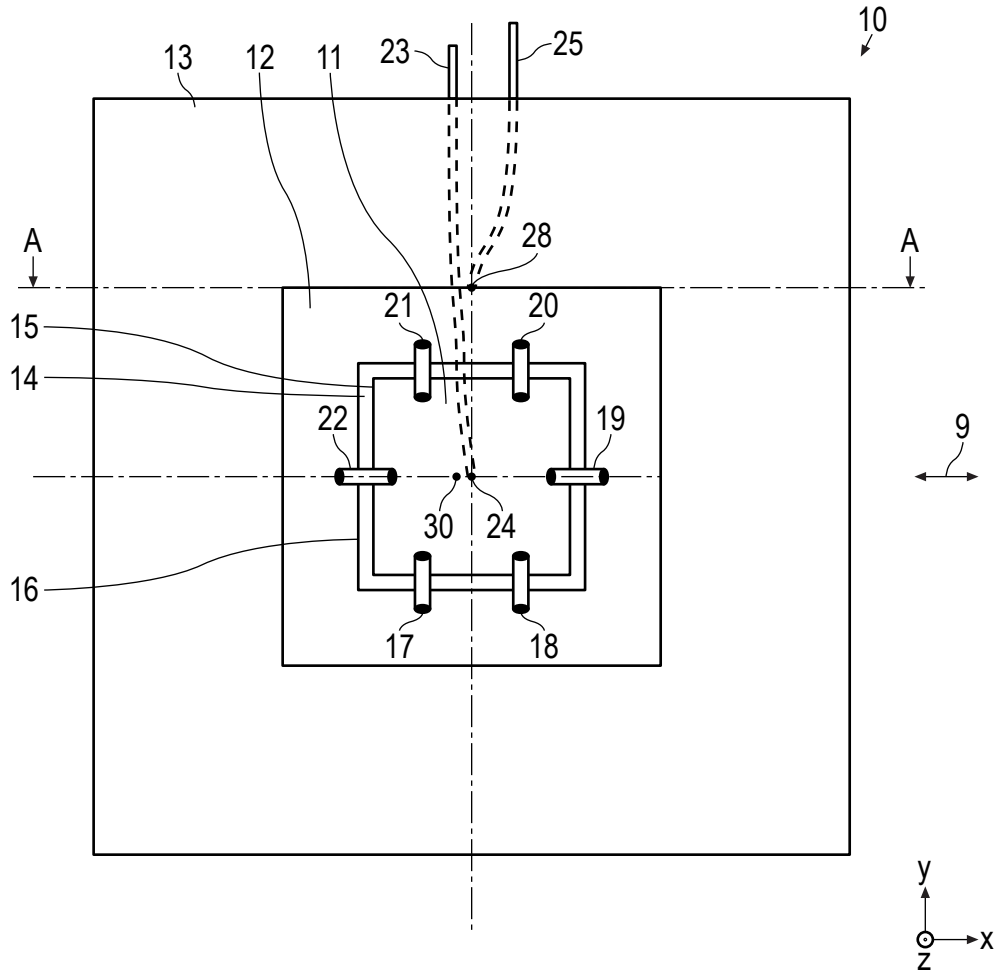

FIG. 1

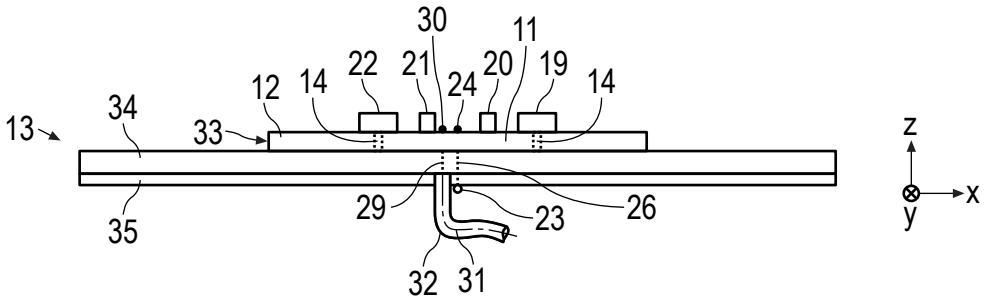

FIG. 2

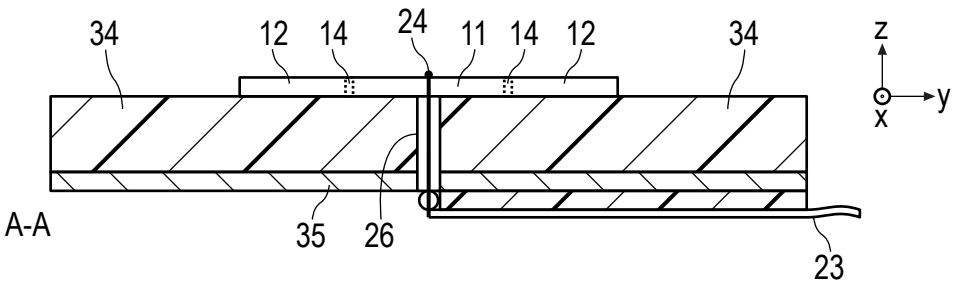

FIG. 3

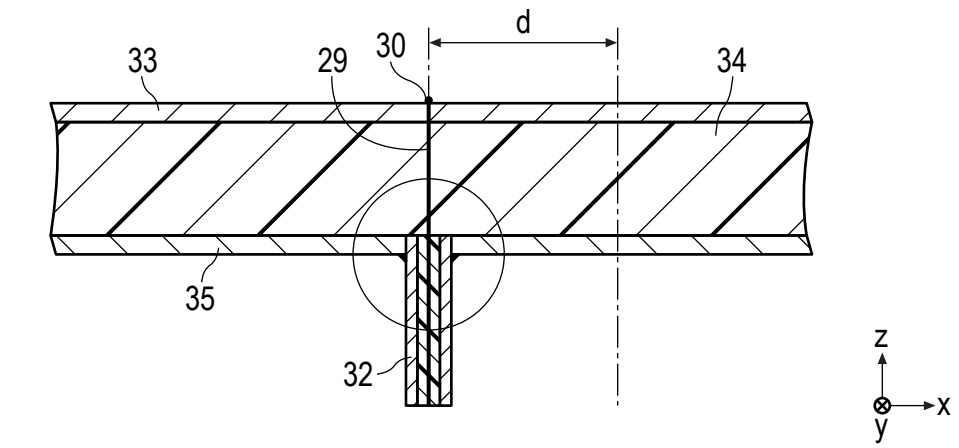

FIG. 4

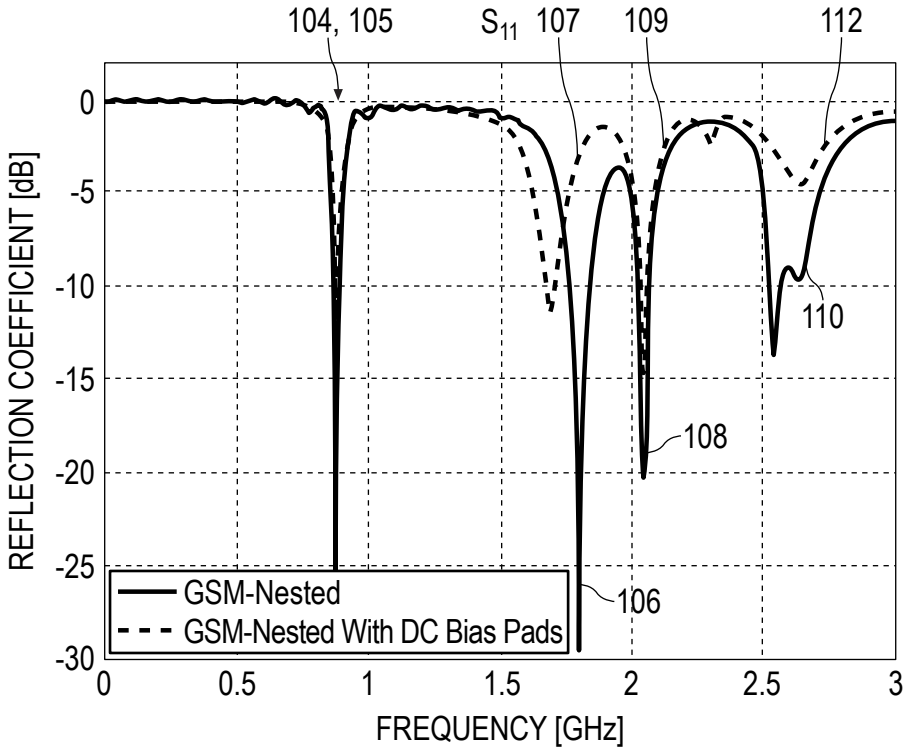
104, 105
S_{11}
107
109
112
110
108
106
REFLECTION COEFFICIENT [dB]
FREQUENCY [GHz]
GSM-Nested
GSM-Nested With DC Bias Pads
0
-5
-10
-15
-20
-25
-30
0
0.5
1
1.5
2
2.5
3

FIG. 15

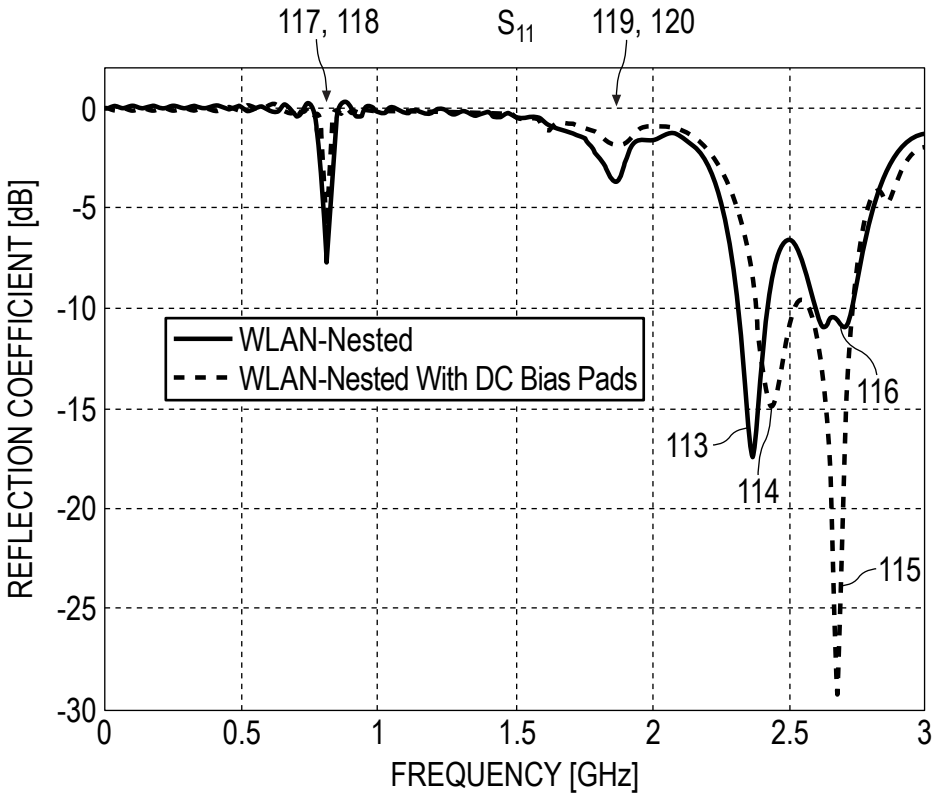
117, 118
S_{11}
119, 120
116
113
114
115
REFLECTION COEFFICIENT [dB]
FREQUENCY [GHz]
WLAN-Nested
WLAN-Nested With DC Bias Pads
0
-5
-10
-15
-20
-25
-30
0
0.5
1
1.5
2
2.5
3

FIG. 16

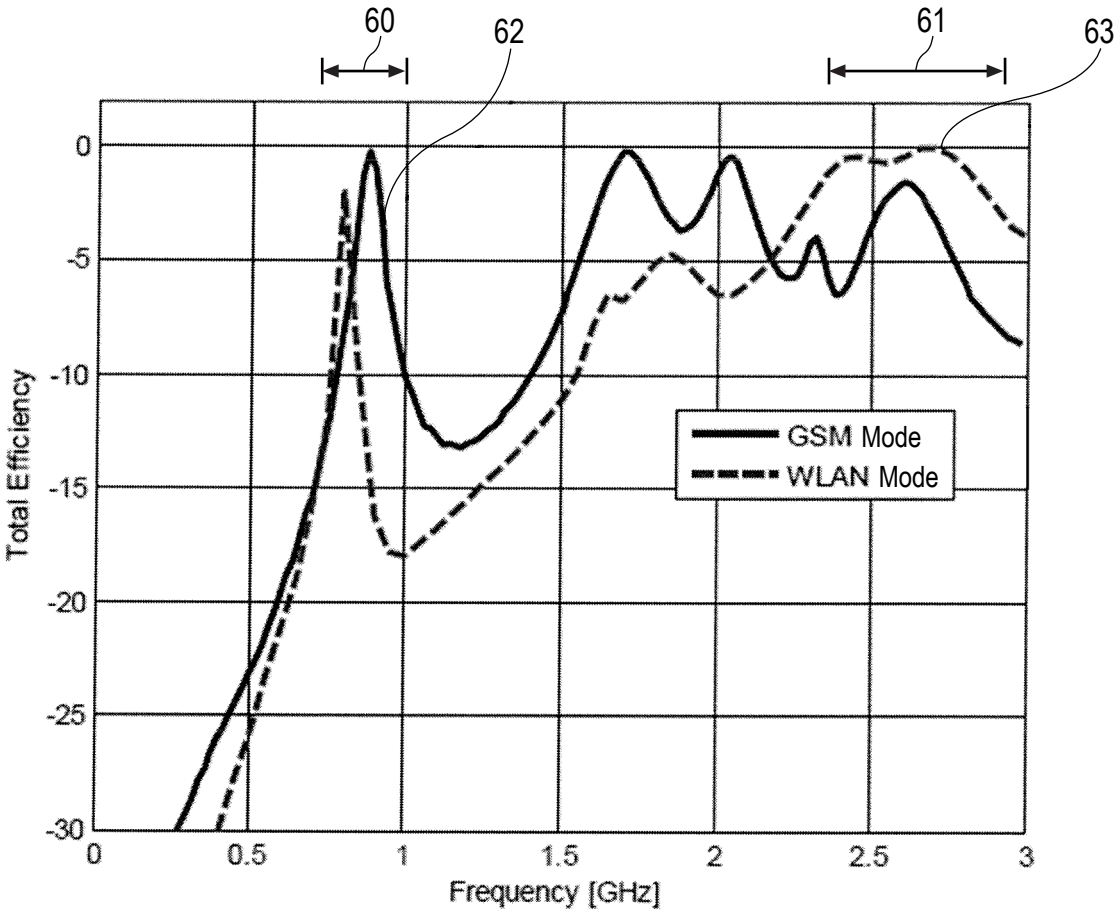
60
62
61
63
0
-5
-10
-15
-20
-25
-30
Total Efficiency
0
0.5
1
1.5
2
2.5
3
Frequency [GHz]
GSM Mode
WLAN Mode

FIG. 20

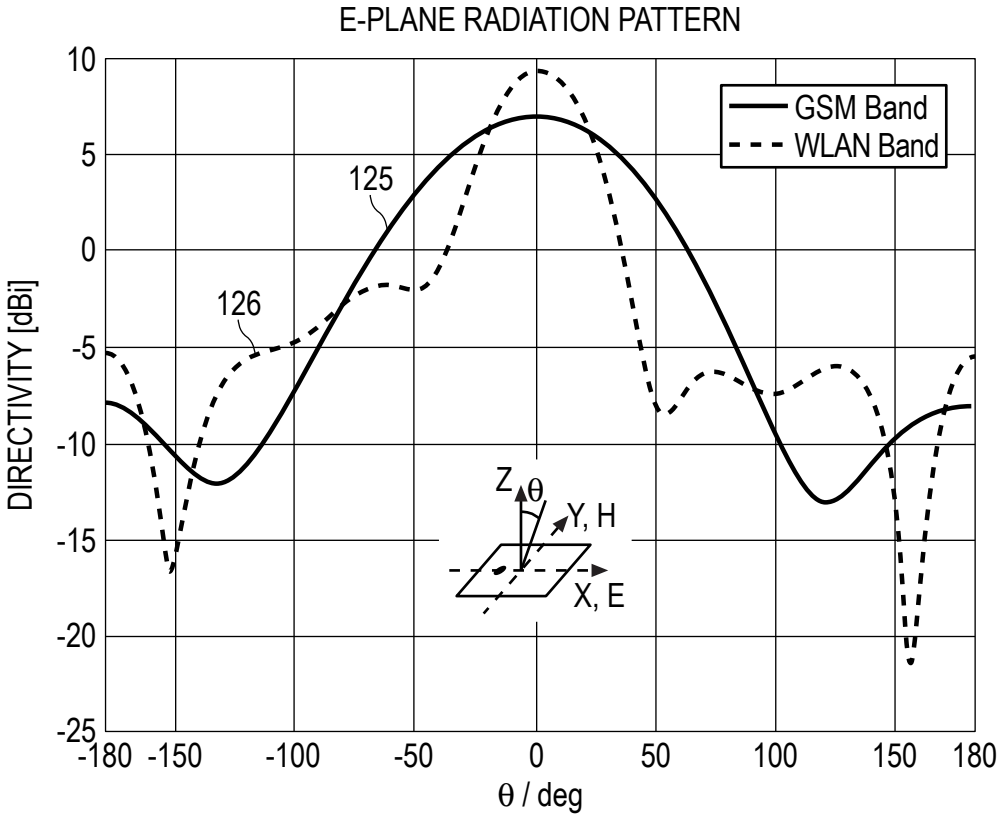
E-PLANE RADIATION PATTERN
GSM Band
WLAN Band
125
126
DIRECTIVITY [dBi]
10
5
0
-5
-10
-15
-20
-25
-180 -150 -100 -50 0 50 100 150 180
θ / deg
Z
θ
Y, H
X, E

FIG. 21

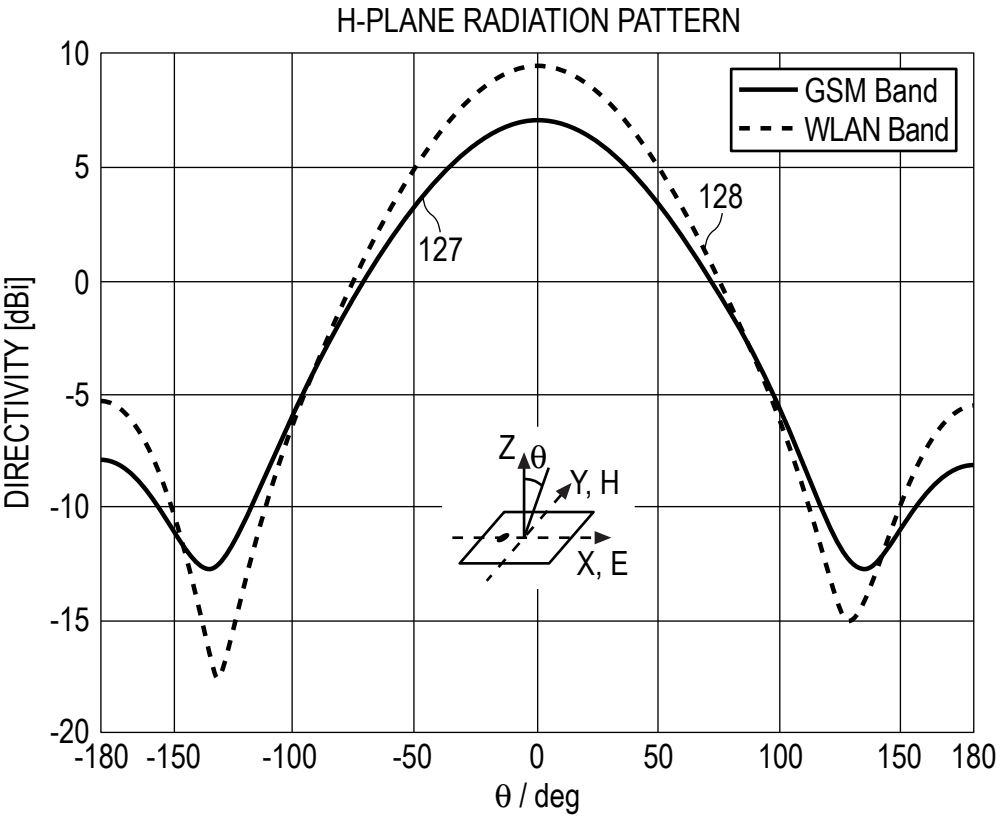
H-PLANE RADIATION PATTERN
GSM Band
WLAN Band
127
128
DIRECTIVITY [dBi]
10
5
0
-5
-10
-15
-20
-180 -150 -100 -50 0 50 100 150 180
θ / deg
Z
θ
Y, H
X, E

FIG. 22