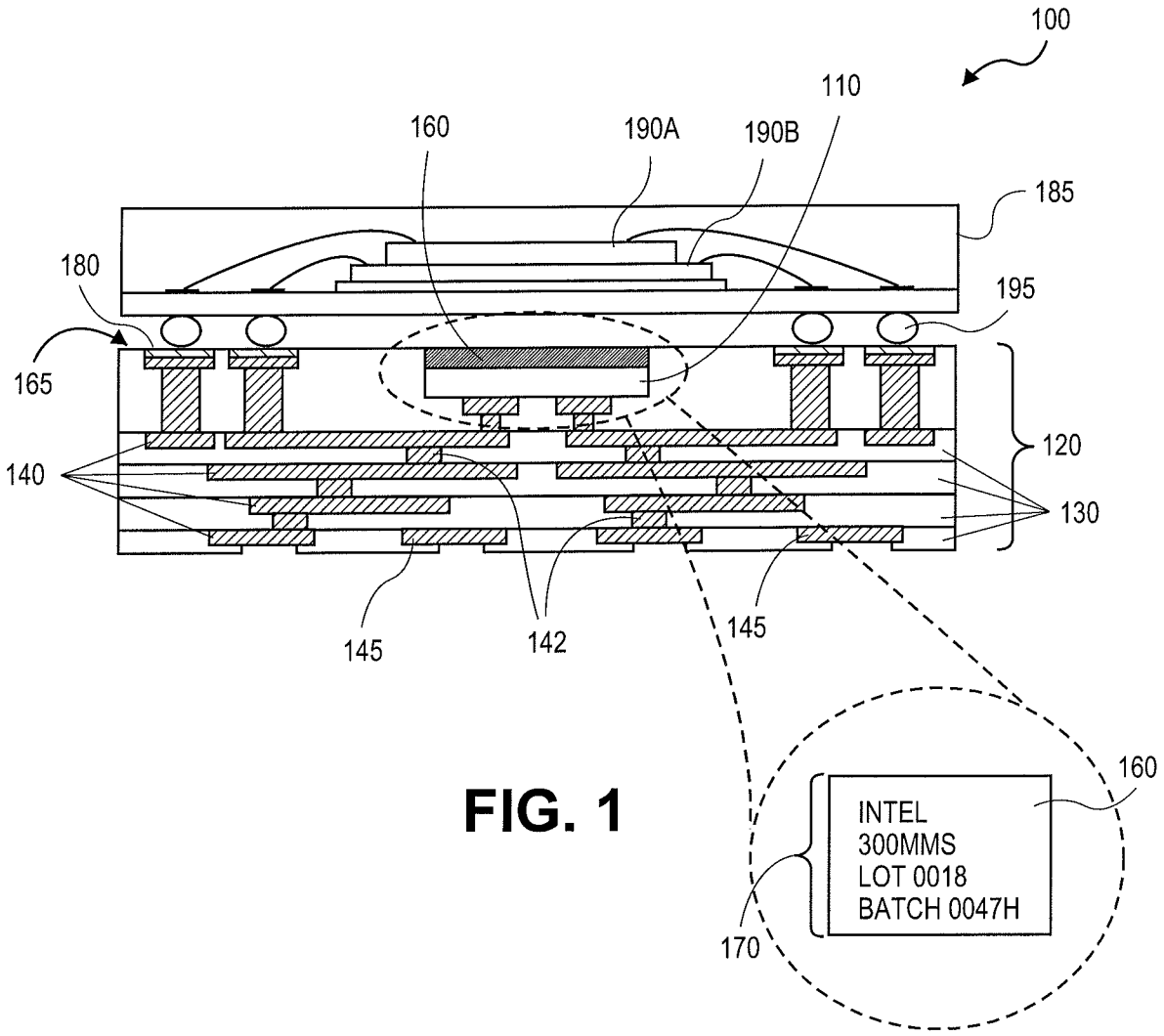
100
110
160
190A
190B
185
180
195
165
120
140
130
145
142
145
160
INTEL
300MMS
LOT 0018
BATCH 0047H
170

FIG. 1

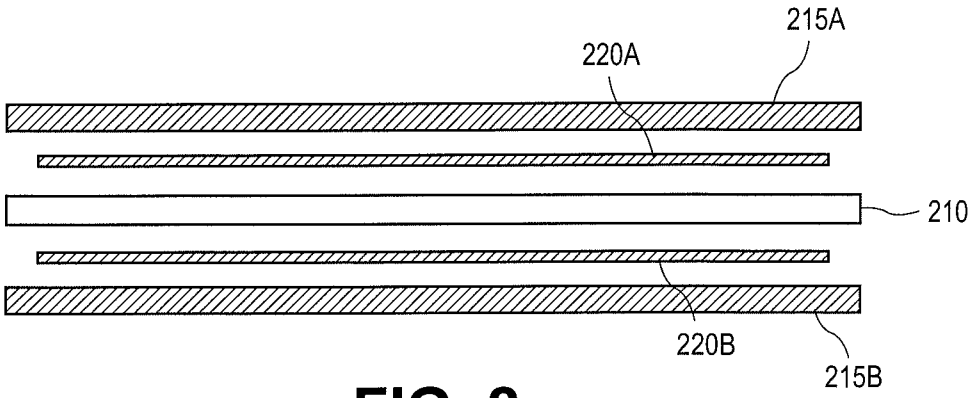

FIG. 2

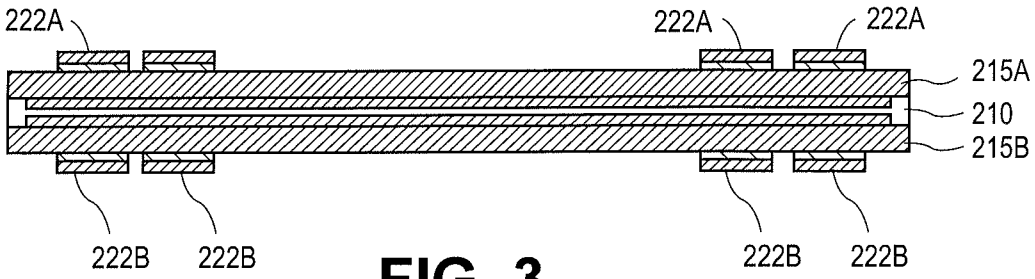

FIG. 3

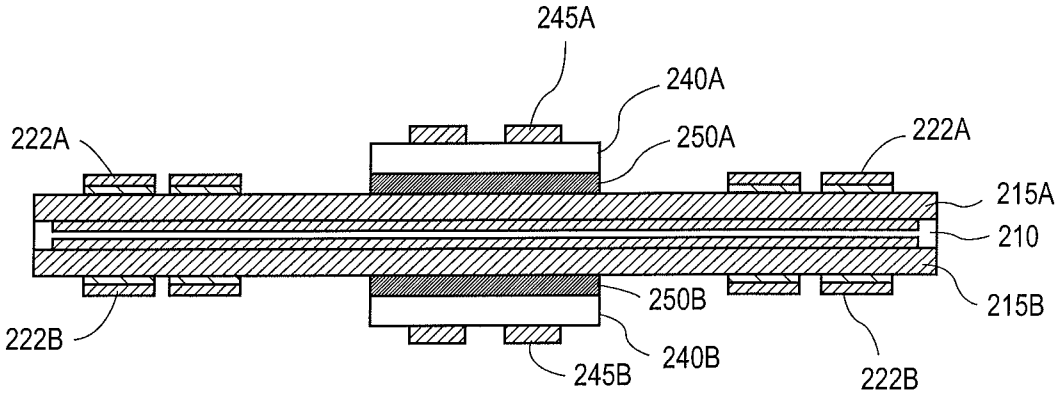

FIG. 4

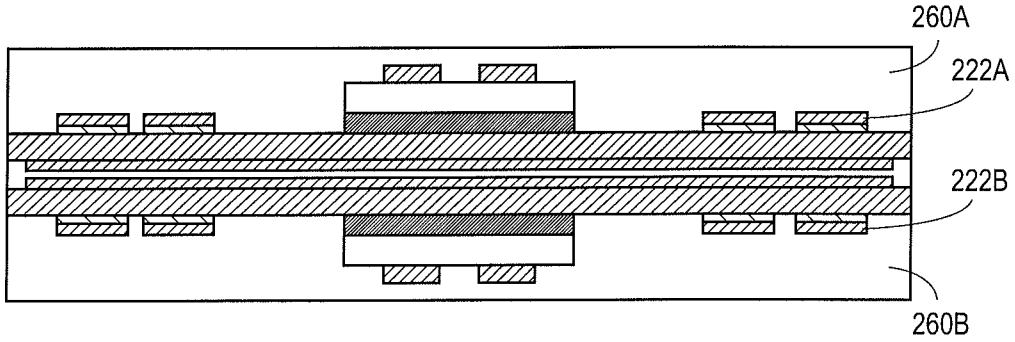

FIG. 5

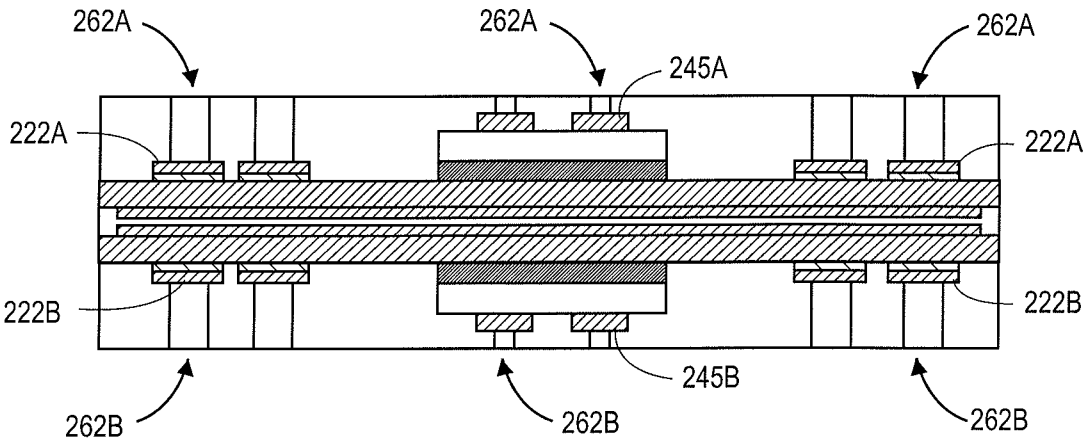

FIG. 6

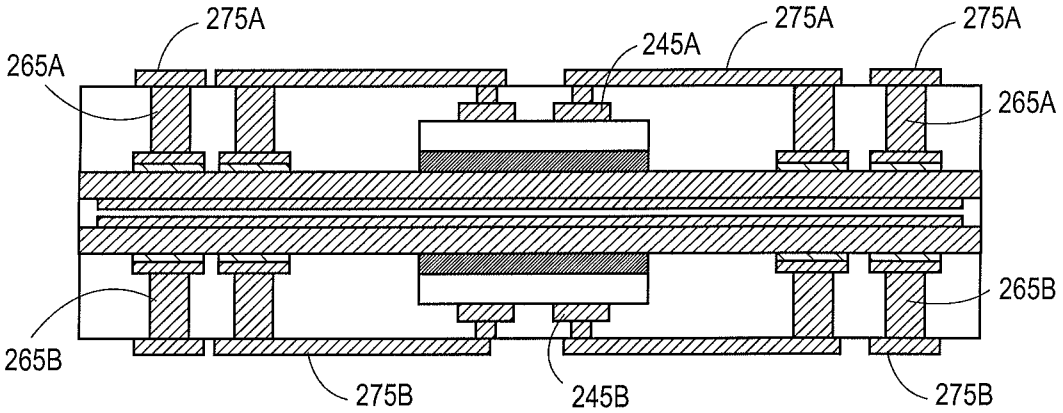

FIG. 7

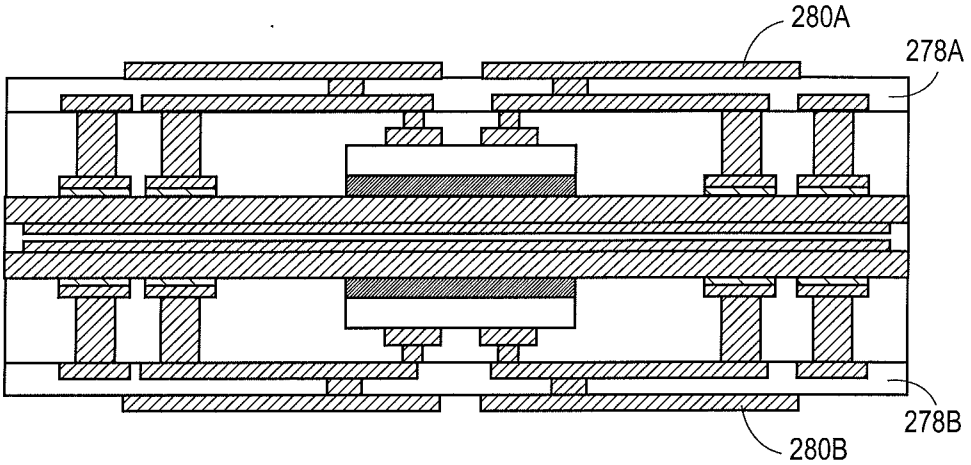

FIG. 8

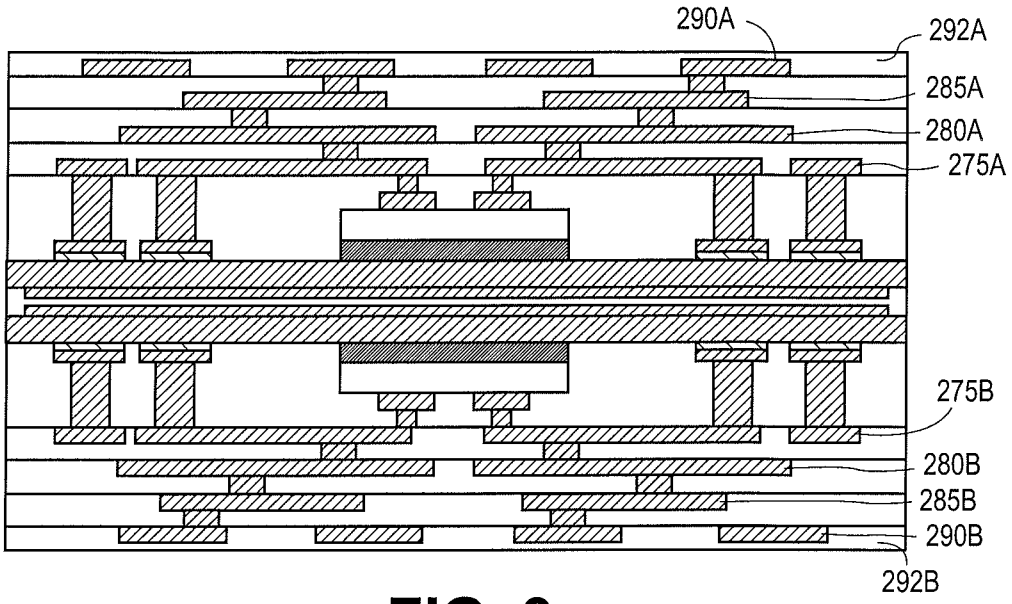

FIG. 9

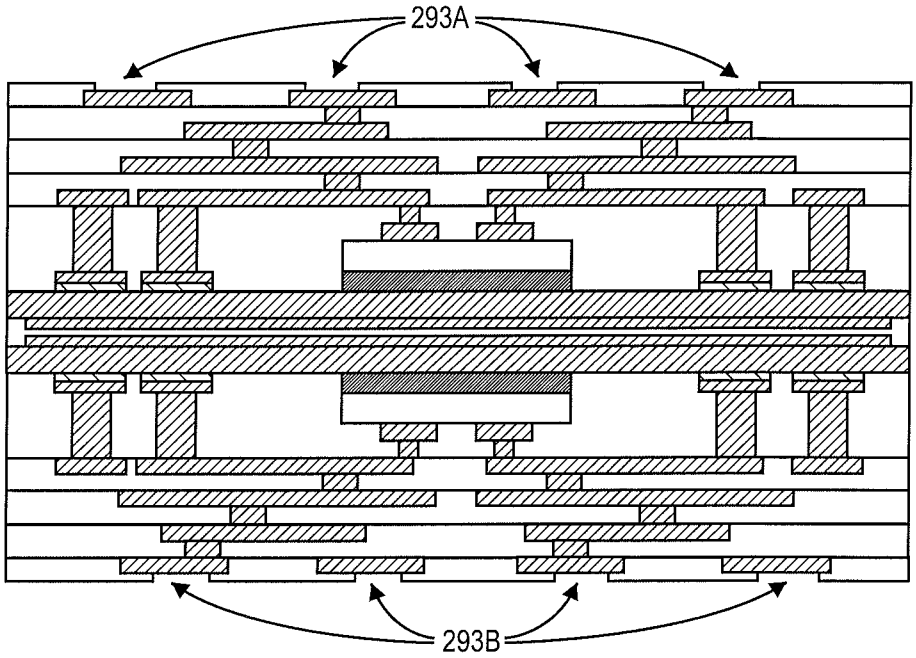

FIG. 10

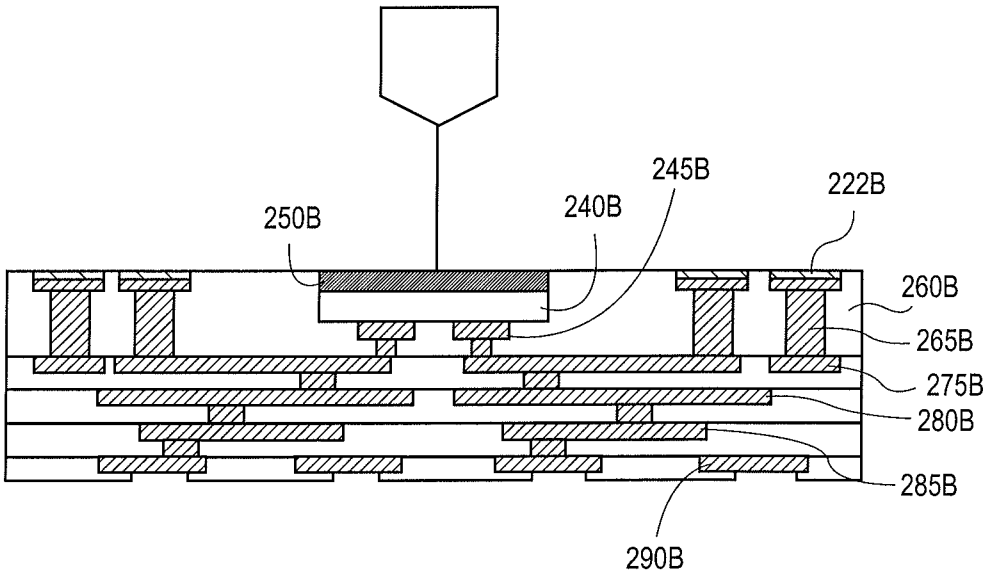

FIG. 11

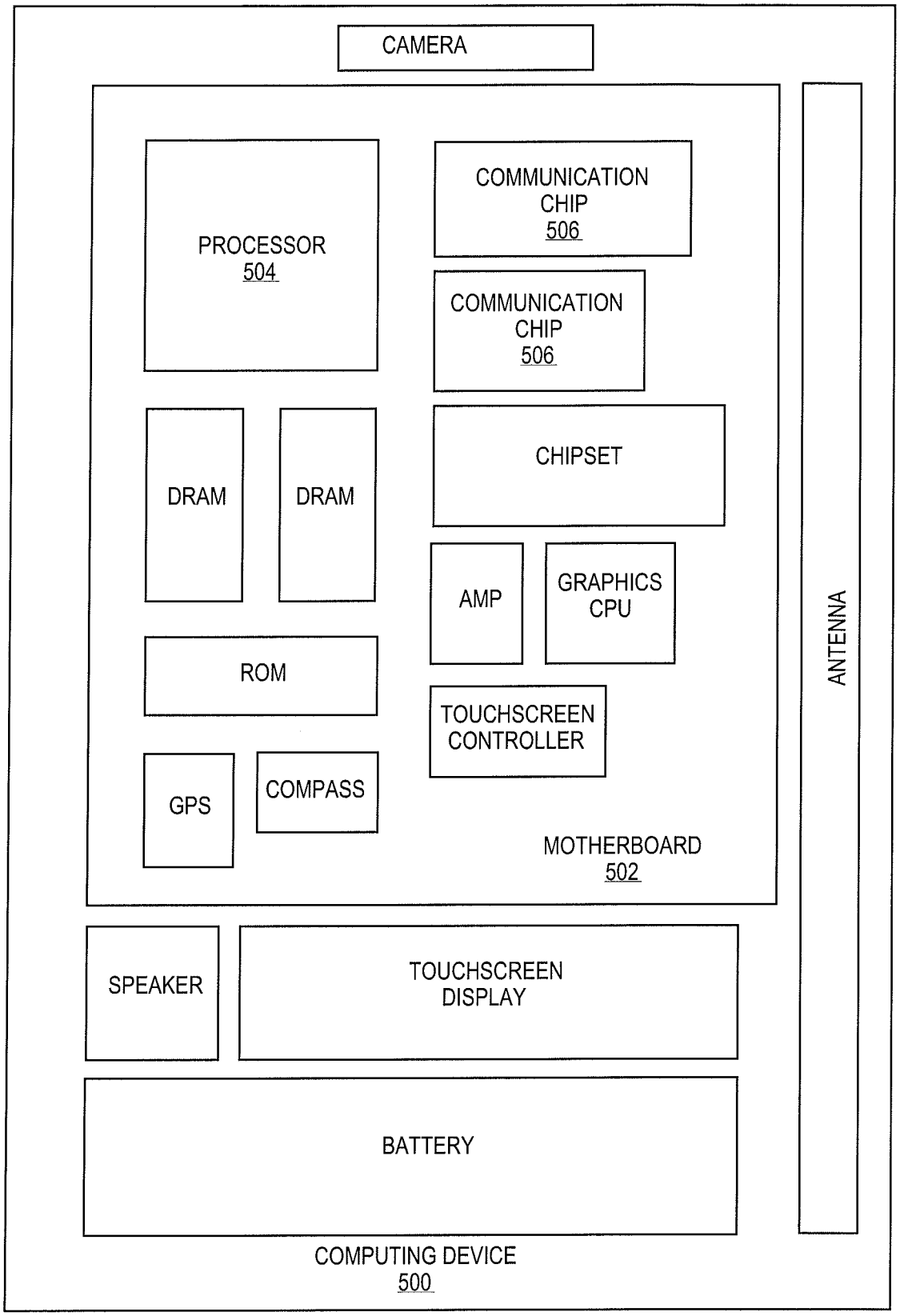
CAMERA
PROCESSOR
504
COMMUNICATION
CHIP
506
COMMUNICATION
CHIP
506
DRAM
DRAM
CHIPSET
AMP
GRAPHICS
CPU
ROM
TOUCHSCREEN
CONTROLLER
GPS
COMPASS
MOTHERBOARD
502
ANTENNA
SPEAKER
TOUCHSCREEN
DISPLAY
BATTERY
COMPUTING DEVICE
500

FIG. 12