FIG. 1

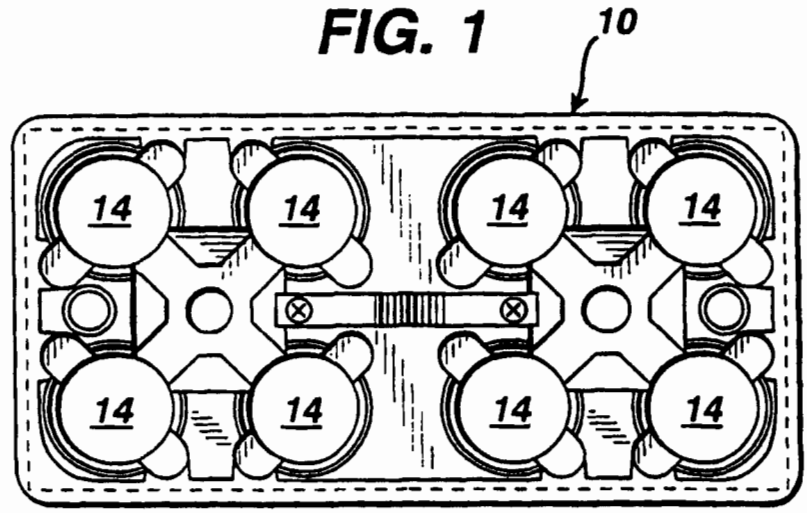

FIG. 2

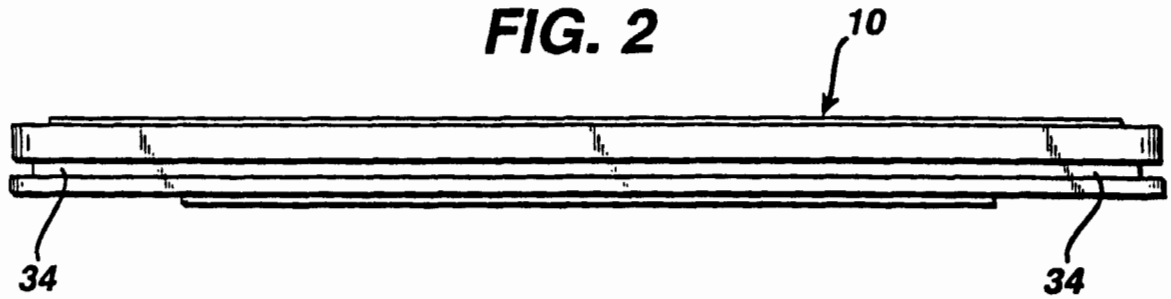

FIG. 3

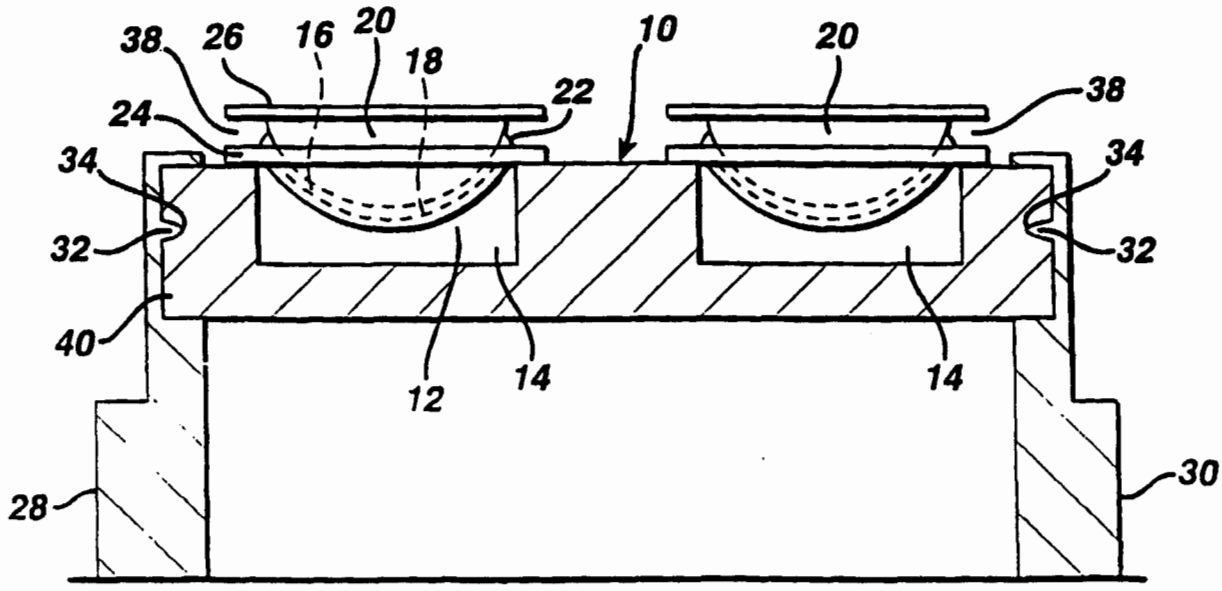

FIG. 4 PRIOR ART

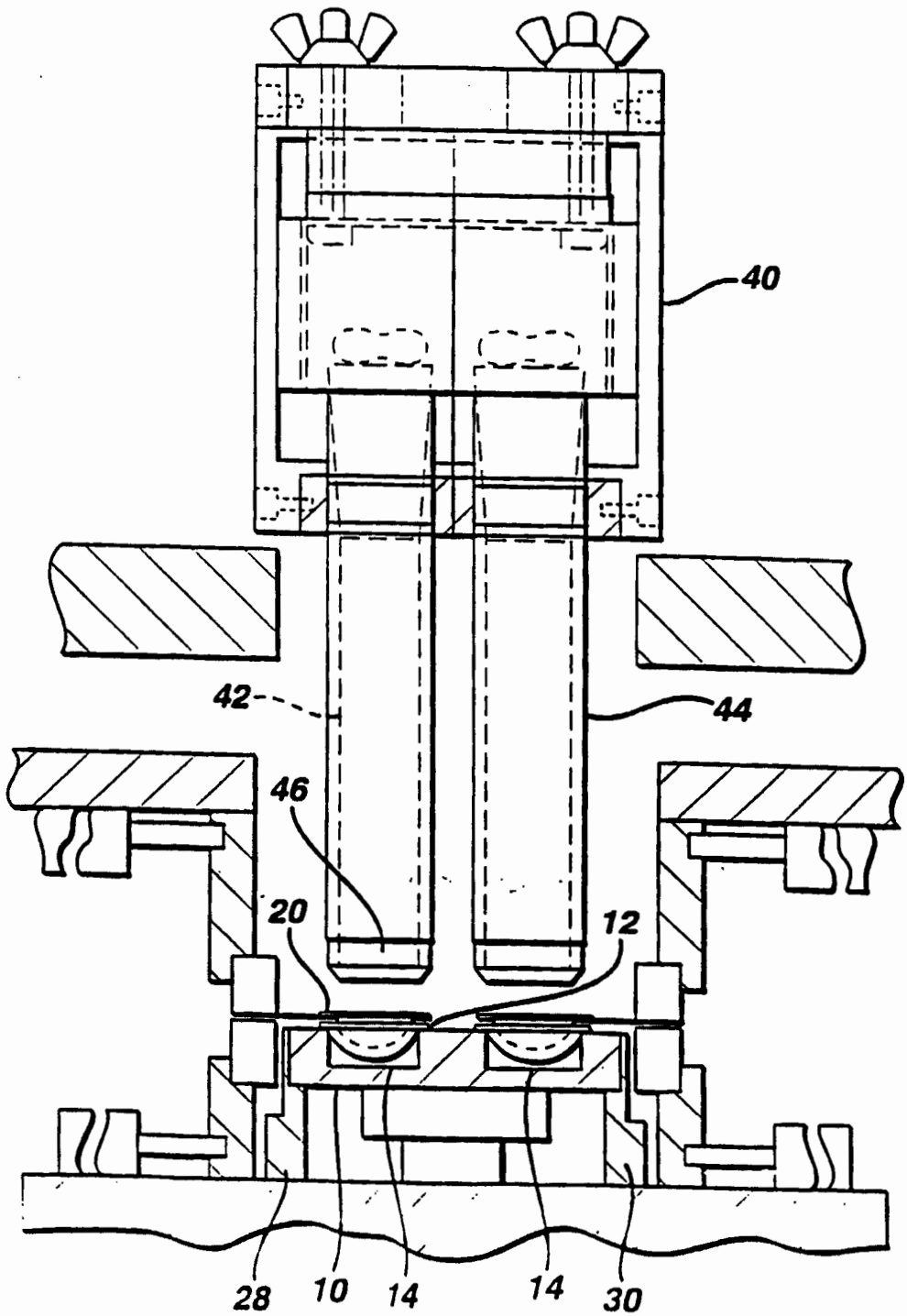

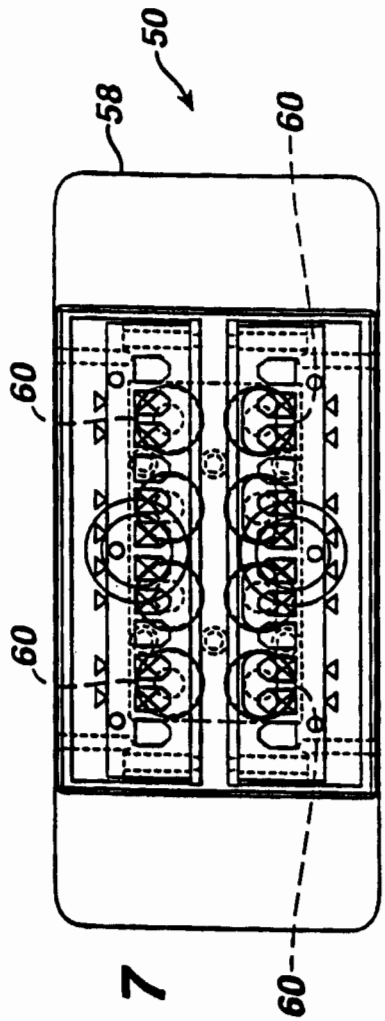

FIG. 7

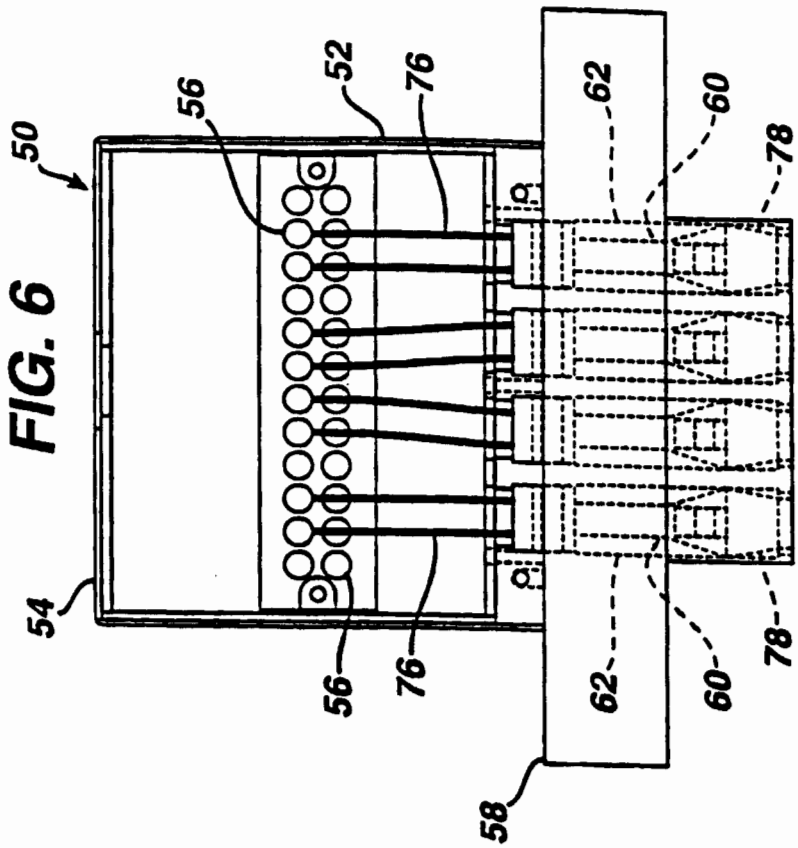

FIG. 6

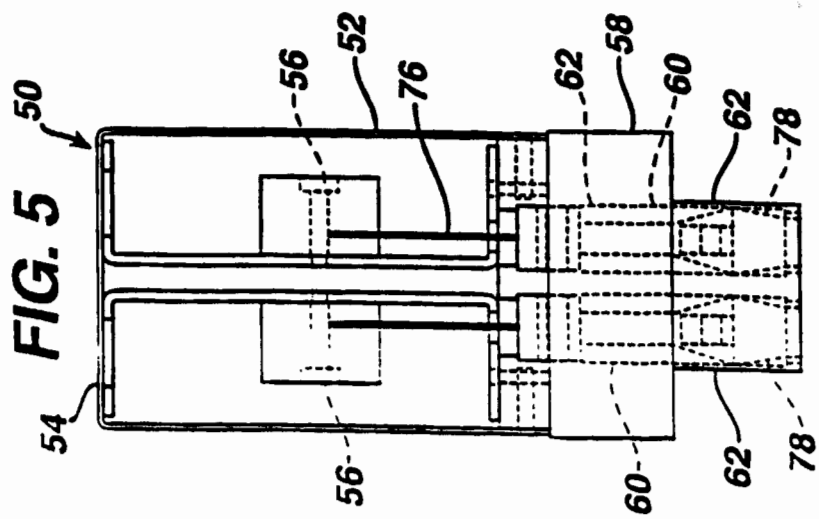

FIG. 5

FIG. 8

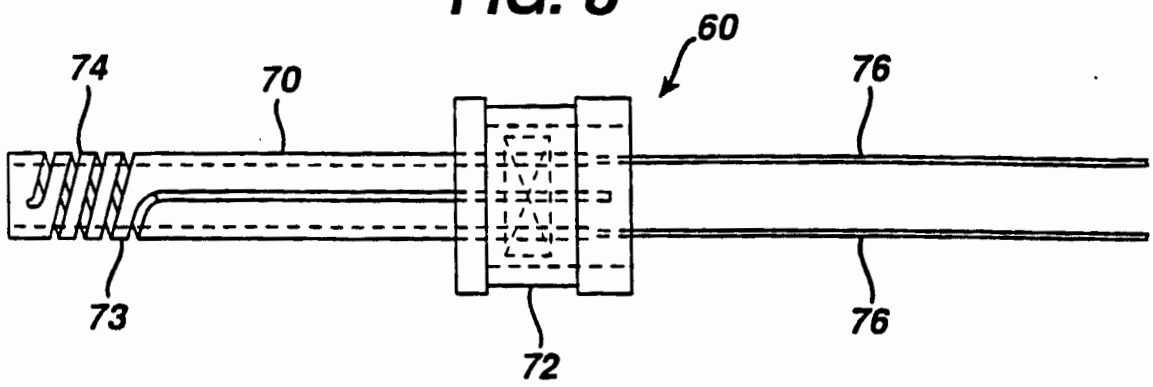

FIG. 9

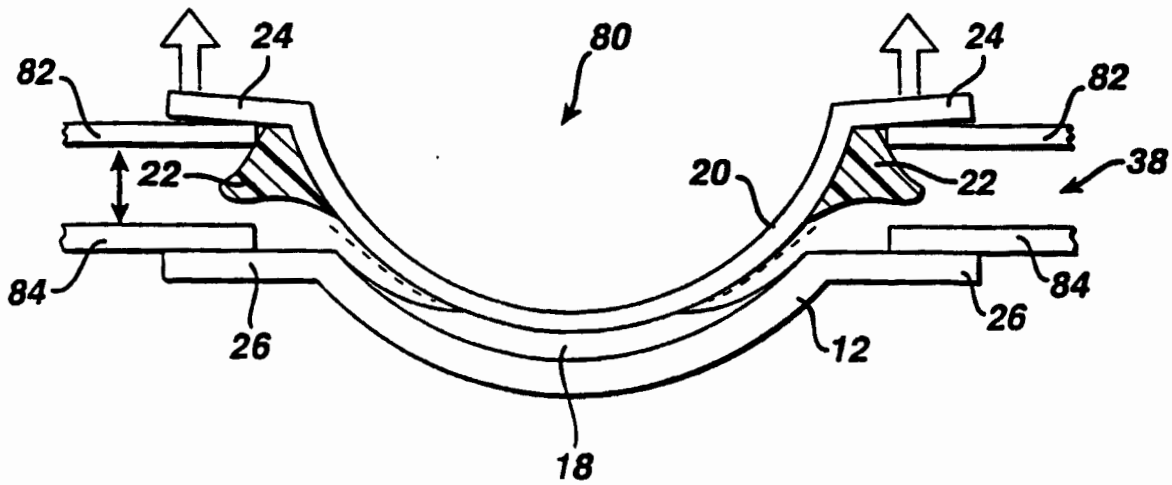

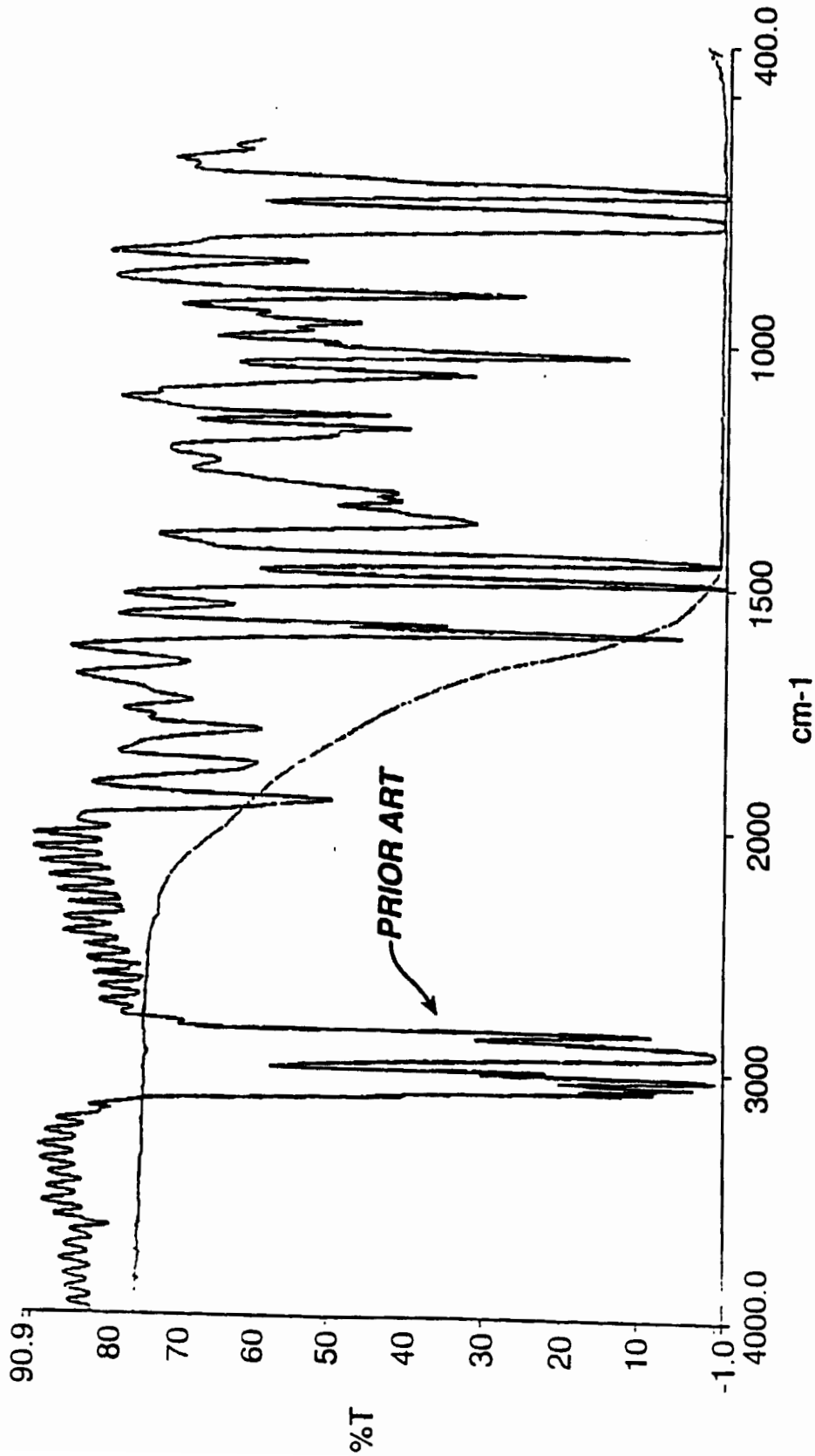
90.9
80
70
60
50
40
30
20
10
-1.0
%T
4000.0
3000
2000
1500
1000
400.0
cm-1
PRIOR ART

FIG. 10

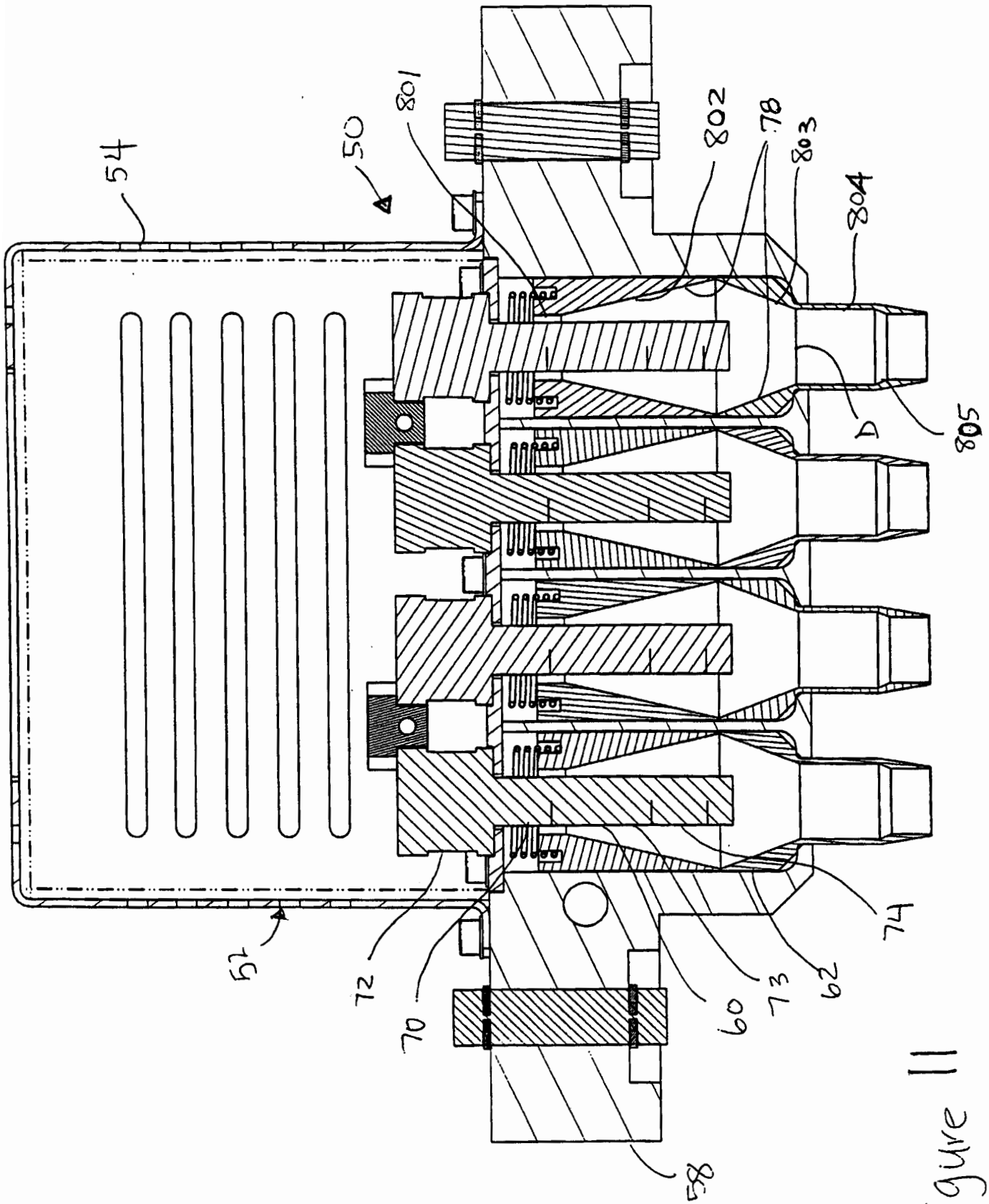

Figure 11

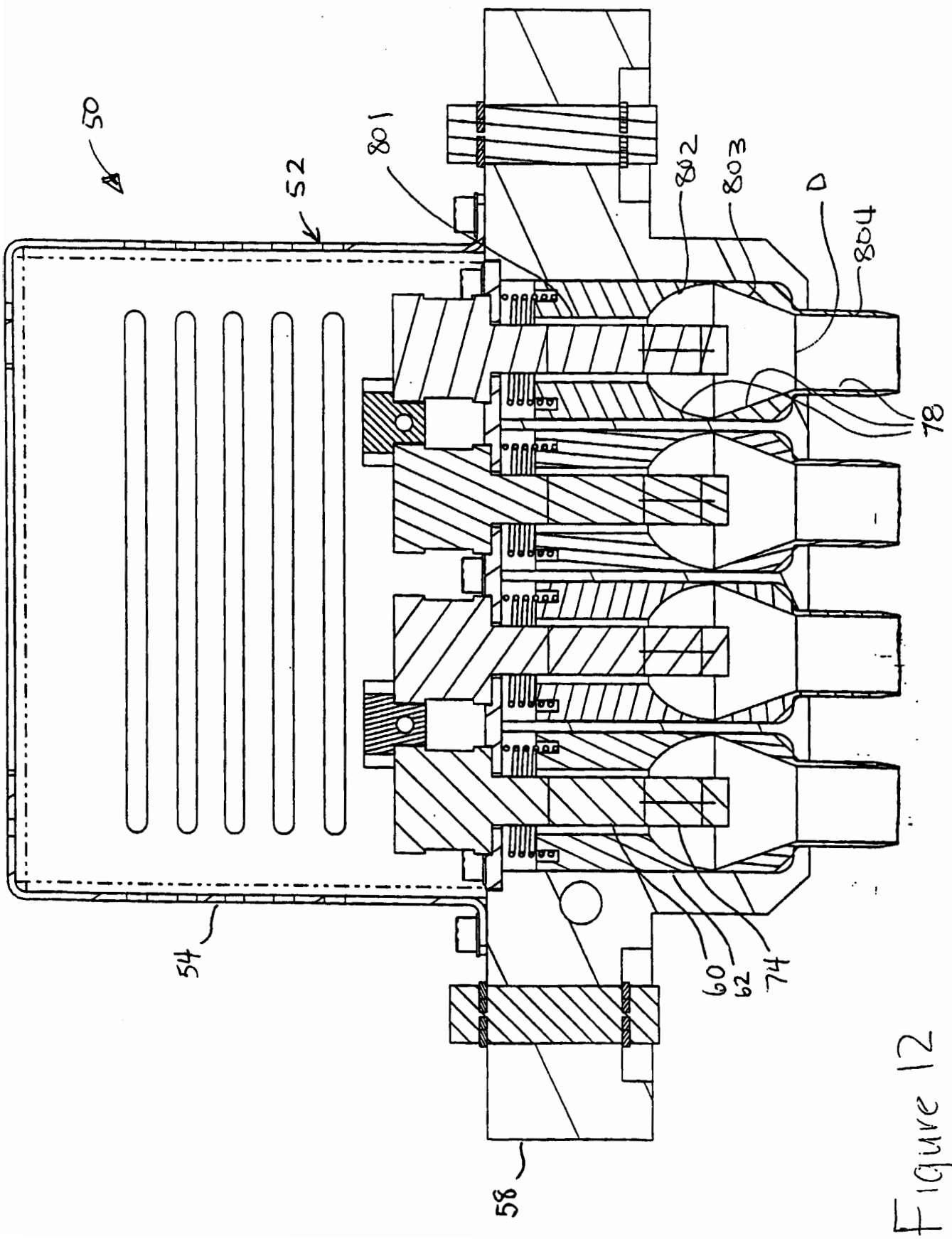

Figure 12

FIG. 13

