RTMP copy

IMPROVEMENTS IN OR RELATING TO THE MONITORING OF PEOPLE

The present invention relates to a security badge for carrying on the person, and to a method of monitoring people which utilises such a security badge.

Increasingly, organisations have secured entrances so that only those persons knowing an appropriate code, for example, can, in theory, pass through the entrance. However, it is not unknown for the doors at such entrances to be left open and/or for outsiders to determine the code. If security has been breached in this manner, it is often not immediately apparent.

Many organisations also require all staff and visitors to wear a security badge identifying them, but again, abuses to this system are common.

It is an object of the present invention to provide means for enhancing current security systems.

According to a first aspect of the present invention there is provided a security badge for carrying on the person, said security badge comprising an identification card having memory, and a card holder in which said card is received to form said badge, and wherein said security badge further comprises display means, and control means arranged to cause said display means to display selected information read from the memory of the identification card.

Preferably, the identification card will store and/or carry information identifying the person to whom it has been issued.

Additionally and/or alternatively, the identification card may store information, to be displayed, which provides validation of the card.

For example, the identification card may store information, which is to be selected for display, which shows that the card had been issued or reissued within a specific period, say of one month or of six months. The date of issuance, on being displayed, would make cards which are out of date immediately obvious.

Additionally and/or alternatively, the identification card may store information, which is to be selected for display, which shows the use of the card in a door entry system and/or in an attendance time clock. Thus, where there is a door entry system, this can be arranged to be actuated by the identification card and/or to write details of the entry of the person to the identification card. Thereafter, the security badge may be arranged to display that the person had appropriately entered through the door entry system. In this manner, persons, for example, who had walked through an open door, would be immediately evident.

Similarly, where a work place is provided with an attendance time clock, the fact that the individual had entered his identification card into that attendance time clock may be stored to the identification card and the security badge may be arranged to display that information.

The identification card may be arranged to store all such information as is useful or helpful for the particular circumstances in which the card is intended to be utilised. From that stored information, any particular data may be selected and displayed. For example, the information to be displayed may be validation confirmation received from a door entry system, and/or an attendance time clock, and/or the issuer of the identification card. However other information may be selectively displayed if required.

The identification card may be any suitable card with memory which is capable of storing information in a manner which renders that information readable. However, if required, the card may be a "smart" card having processing means as well as memory. In a preferred embodiment, the identification card is an IC card.

It is possible to provide the display of the security badge either on the identification card itself or on the card holder. Similarly, the control means may be comprised by processing means provided either on the identification card or on the card holder, or distributed between the two.

In one embodiment, the display is provided on the card holder and is actuated by processing means provided on the card holder. The card holder is,

in this case, additionally provided with card reading means enabling the processing means of the card holder to read information stored by the card.

The display may be any appropriate means of indicating the selected information obtained from the identification card. However, in the preferred embodiment, the display is an LCD.

Means are provided to power the processing means and the display. For example, a battery or batteries may be provided in the identification card and/or in the card holder. However, it is presently preferred that the card holder incorporate a solar cell.

The present invention also extends to a method of monitoring people, the method comprising the steps of providing a security badge for each person, the security badge incorporating an identification card having memory, said identification card having been validated by external means, and further comprising the step of causing any validated information stored in the card memory by said external means to be displayed by display means of the security badge.

If the identification card carried by a person has been appropriately validated, this will be immediately evident by the display of the security badge. Similarly, if the identification card has not been appropriately validated there will be no correct validation information displayed, and it will immediately be evident that the person with the security badge is not authorised to be on the premises, for example, or has failed to take the necessary validation action.

For example, where every employee is required to indicate their arrival at a work place to an attendance time clock, the fact that that has been done can be displayed. Additionally and/or alternatively, the identification card of an individual may be validated by the door entry system for the premises, whereby it will be apparent if a person has not properly passed through that door entry system.

In an embodiment, said external means is an attendance time clock recorder arranged to write details of the arrival place and time, and/or the

departure place and time to the identification card. This time and place information may be selected for display by the security badge. Additionally and/or alternatively, the attendance time clock recorder may be arranged to write a validation code, for display by the security badge, to the identification card after an individual has used his identification card to make entries to the attendance time clock recorder in proper manner.

Additionally and/or alternatively, the identification card may be used to operate a door entry system and use of the card in that manner may cause a validation code to be written to the identification card by the door entry system, which validation code may then be selected for display by the security badge. Where entrances and exits are controlled by security personnel, such personnel may be provided with local equipment, for example, hand held card writers, to validate identification cards.

Embodiments of the present invention will hereinafter be described, by way of example, with reference to the accompanying drawings, in which:-

Figure 1 shows a security badge of the present invention,

Figure 2 shows the electrical circuit of the security badge of Figure 1, and

Figure 3 shows one embodiment of a door security device which may be used with a security badge of the present invention.

The security badge 10 shown in Figure 1 comprises a card holder 12 in which an identification card, in the form of an IC card 14, is received. This IC card 14, in known manner, has both memory and processing means. The card 14 may also, as is indicated, carry a photograph 16 of the individual whom it identifies together with the individual's name at the area 18 and any further relevant information, such as job title or status.

The card holder 12 has a card receiving slot provided with a card reader (not shown). Thus, when the IC card 14 is received within the holder 12 as illustrated in Figure 1, circuit elements of the card holder 12 and of the IC card 14 are able to communicate. As shown in Figure 1, the card holder 12 also has a display 20, for example, an LCD display, and a solar cell 22 for providing power for the circuit elements of the card holder 12 and of the IC card 14.

Figure 2 is a block diagram showing the circuit of the card holder 12 in the illustrated embodiment of the invention. Thus, and as can be seen, the card holder 12 is provided with a processor 24 coupled to be powered by the solar cell 22. The processor 24 is also coupled to drive the LCD 20. An RC circuit 28 is provided to generate oscillating pulses for clocking the processor 24. In addition, the card slot in the card holder 12 comprises a card connector 26 which is able to contact the IC card 14, and thereby provide communication between the IC card 14 and the processor 24 whereby information may be read from, or written to, the IC card 14.

In the illustrated embodiment, all of the elements of the circuit of Figure 2 as shown are provided in the card holder 12. However, it is also possible to provide some or all of the circuit elements on the IC card 14. The distribution of the circuit elements between the card holder 12 and the IC card 14 may be chosen as required.

In use, each individual with access to a secure area, or who is to be monitored, will be provided with an individual identification IC card 14. As described above, the IC card 14 may carry the photograph and display the name of that individual, and will also have recorded to memory appropriate identification information which will serve to identify the individual concerned and also to provide any additional relevant information to equipment with which the card is to interact. For example, if the card is to provide access for the individual through an entrance security system, the card may carry security or authorisation codes for enabling the security system.

In known manner, any person on the secured premises is required to carry and display his security badge 10. It may be provided with a fastener so that it can be attached to a jacket pocket, for example, or worn on a chain around the neck. However, not only does the security badge 10 make the face and name of the person visible, it may also display, by way of display 20, information validating the presence of the individual and/or showing that the individual has performed certain requirements. Thus, individual identification IC cards, as 14, may be centrally validated at regular intervals, and a code, and/or validation date, displayed to show that the card is current and not out of date. If

the worker is required to 'clock in' at an attendance time clock when arriving at the premises, the fact that that has taken place may be displayed.

In the embodiment particularly illustrated, the identification card 14 is to be used in conjunction with an attendance time clock apparatus 40 as shown in Figure 3. As described in International application No. WO96/30875, the system shown in Figure 3 enables information about the entry and exit of persons to be recorded and can also be used to provide access to premises. In this embodiment, the time clock apparatus 40 has a remote card reader 42 into which the identification card 14 is inserted, but the identification card 14 of this invention may be used with any of the apparatus, or to perform any of the methods described in the International apparatus.

Additionally and/or alternatively, the IC cards used in the present invention may also be used with door security apparatus, for example, as described in WO96/30876.

It will be appreciated that the routines to be undertaken by external apparatus, such as time clock apparatus, or door security systems, with which IC cards used in the present invention are utilised, may be chosen as required, and in accordance with all of the circumstances.

Similarly, the information to be written to each IC card 14 will be chosen as required, as will the information that the security badge is to display.

If required, the selected information, to be displayed by the security badge, or additional selected information, may be made readable by hand held reading devices, for example, carried by security guards.

It will be appreciated that other variations and modifications to the embodiments described and illustrated may be made within the scope of this application.

* C L M S *

CLAIMS

1. A security badge for carrying on the person, said security badge comprising an identification card having memory, and a card holder in which said card is received to form said badge, and wherein said security badge further comprises display means, and control means arranged to cause said display means to display selected information read from the memory of the identification card.

2. A security badge as claimed in claim 1, wherein the identification card stores and/or carries information identifying the person to whom it has been issued.

3. A security badge as claimed in claim 1 or claim 2, wherein the identification card stores information, to be displayed, which provides validation of the card.

4. A security badge as claimed in any preceding claim, wherein the identification card may store information, which is to be selected for display, which shows the use of the card in a door entry system and/or in an attendance time clock.

5. A security badge as claimed in any preceding claim, wherein the identification card is an IC card.

6. A security badge as claimed in any preceding claim, wherein said display means is provided on the card holder.

7. A security badge as claimed in any preceding claim, wherein the control means is comprised of processing means provided on the card holder.

8. A security badge as claimed in any preceding claim, wherein the display means is provided on the card holder and is actuated by processing means provided on the card holder, and wherein the card holder is additionally provided with card reading means enabling the processing means of the card holder to read information stored by the card.

* C L M S *

9. A security badge as claimed in any preceding claim, wherein said display means is an LCD.

10. A method of monitoring people, the method comprising the steps of providing a security badge for each person, the security badge incorporating an identification card having memory, said identification card having been validated by external means, and further comprising the step of causing any validated information stored in the card memory by said external means to be displayed by display means of the security badge.

11. A method of monitoring people as claimed in claim 10, for use where persons are required to indicate their arrival at a work place to an attendance time clock, the method comprising the step of causing the fact that arrival has been indicated to an attendance time clock to be displayed.

12. A method as claimed in claim 10 or claim 11, wherein said external means is an attendance time clock recorder arranged to write details of the arrival place and time, and/or the departure place and time to the identification card, and further comprising selecting this time and place information for display by the security badge.

13. A method as claimed in any of claims 10 to 12, wherein the identification card is arranged to be used to operate a door entry system, and use of the card in that manner causes a validation code to be written to the identification card by the door entry system, and further comprising selecting the validation code for display by the security badge.

ABSTRACT

IMPROVEMENTS IN OR RELATING TO THE MONITORING OF PEOPLE

A security badge (10) comprises a card holder (12) in which an identification card, in the form of an IC card (14), is received. This IC card (14) has both memory and processing means, and carries a photograph (16) of the individual whom it identifies. The card holder (12) is provided with a processor (24) powered by a solar cell (22). Each individual with access to a secure area, is provided with an individual identification IC card (14), and is required to display his security badge (10). The security badge (10) is arranged to display, on display (20), information validating the presence of the individual and/or showing that the individual has performed certain requirements.

(Figure 1)

THIS SHEET HAS BEEN
REPLACED

This Sheet Has Been Replaced

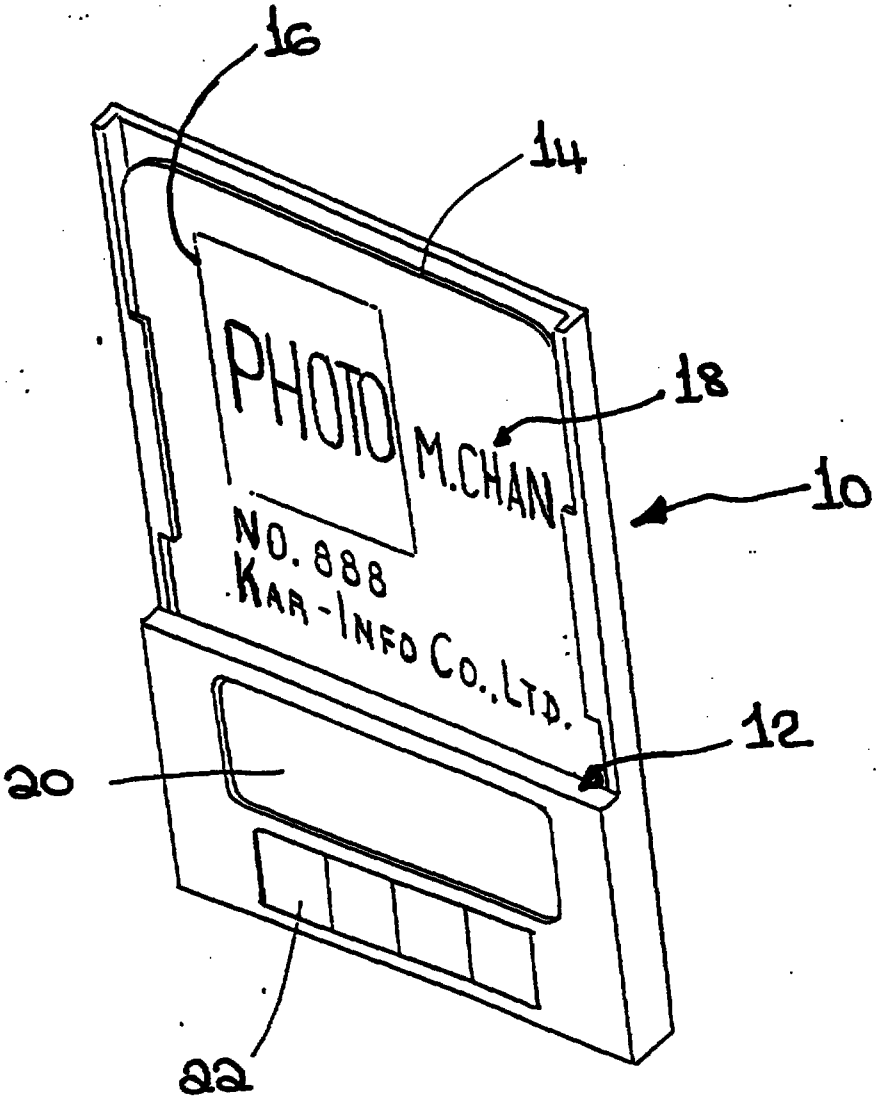

Figure 1

This Sheet Has Been Replaced

THIS SHEET HAS BEEN REPLACED

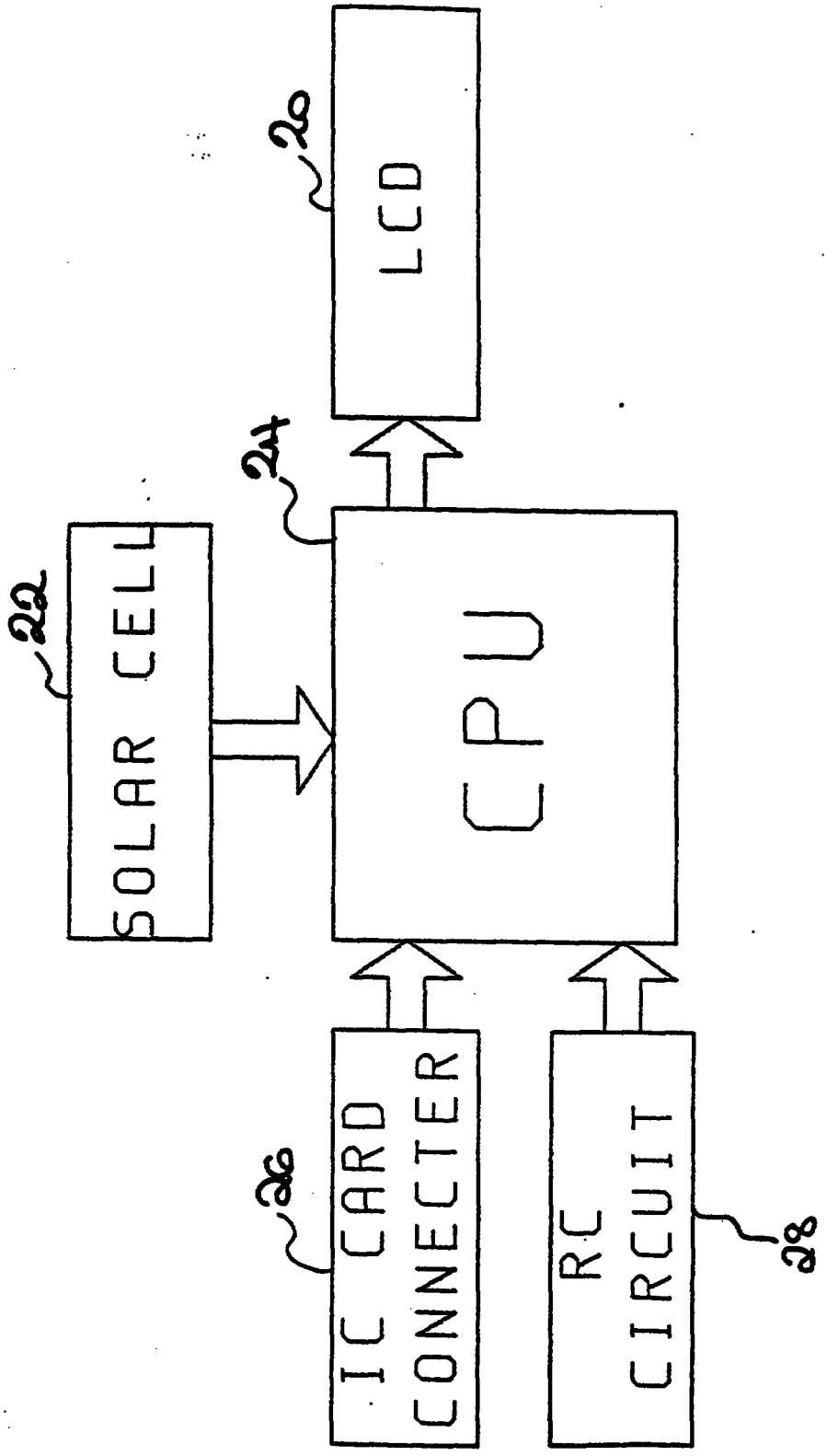

Figure 2

This Sheet Has Been Replaced

THIS SHEET HAS BEEN REPLACED

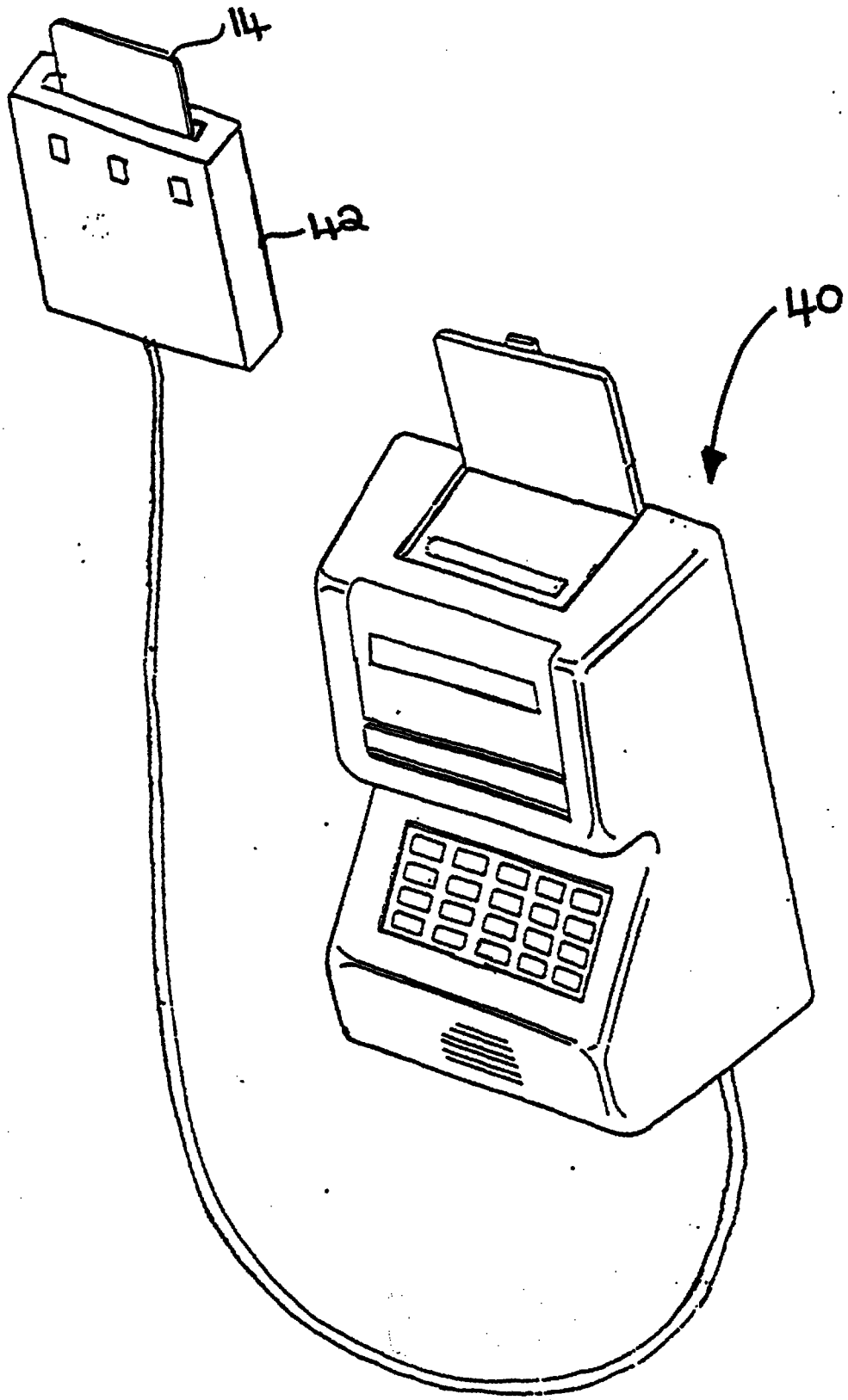

Figure 3

REPLACEMENT SHEET
16 DEC 1997

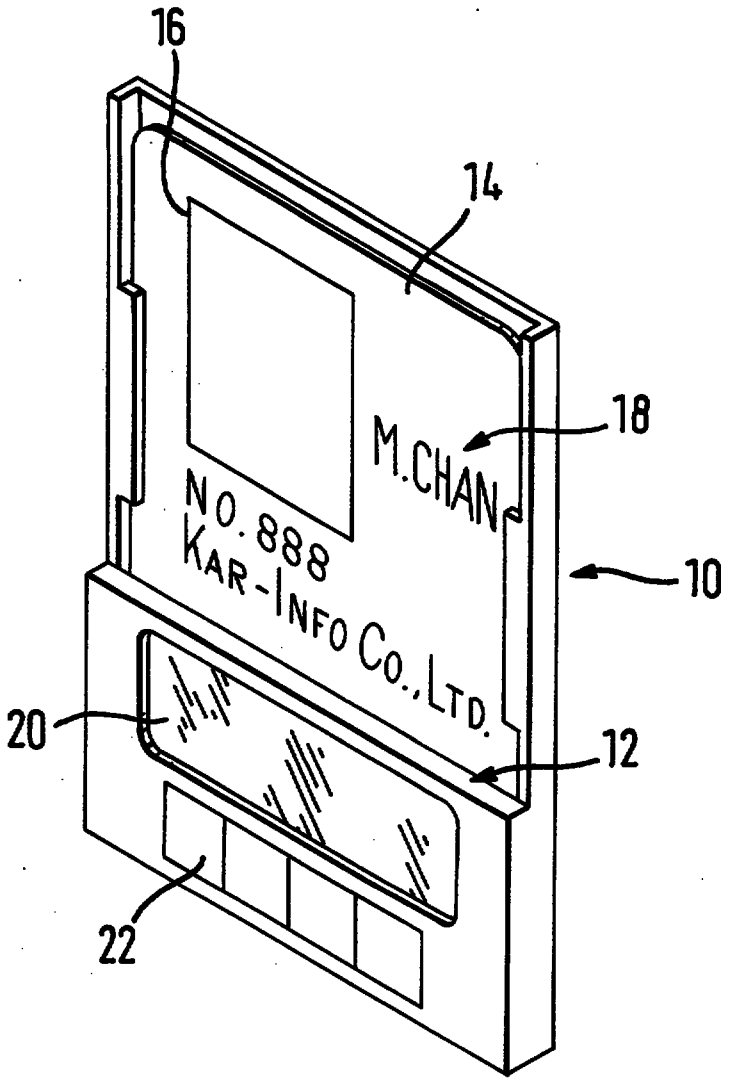

FIG. 1

REPLACEMENT SHEET
16 DEC 1997

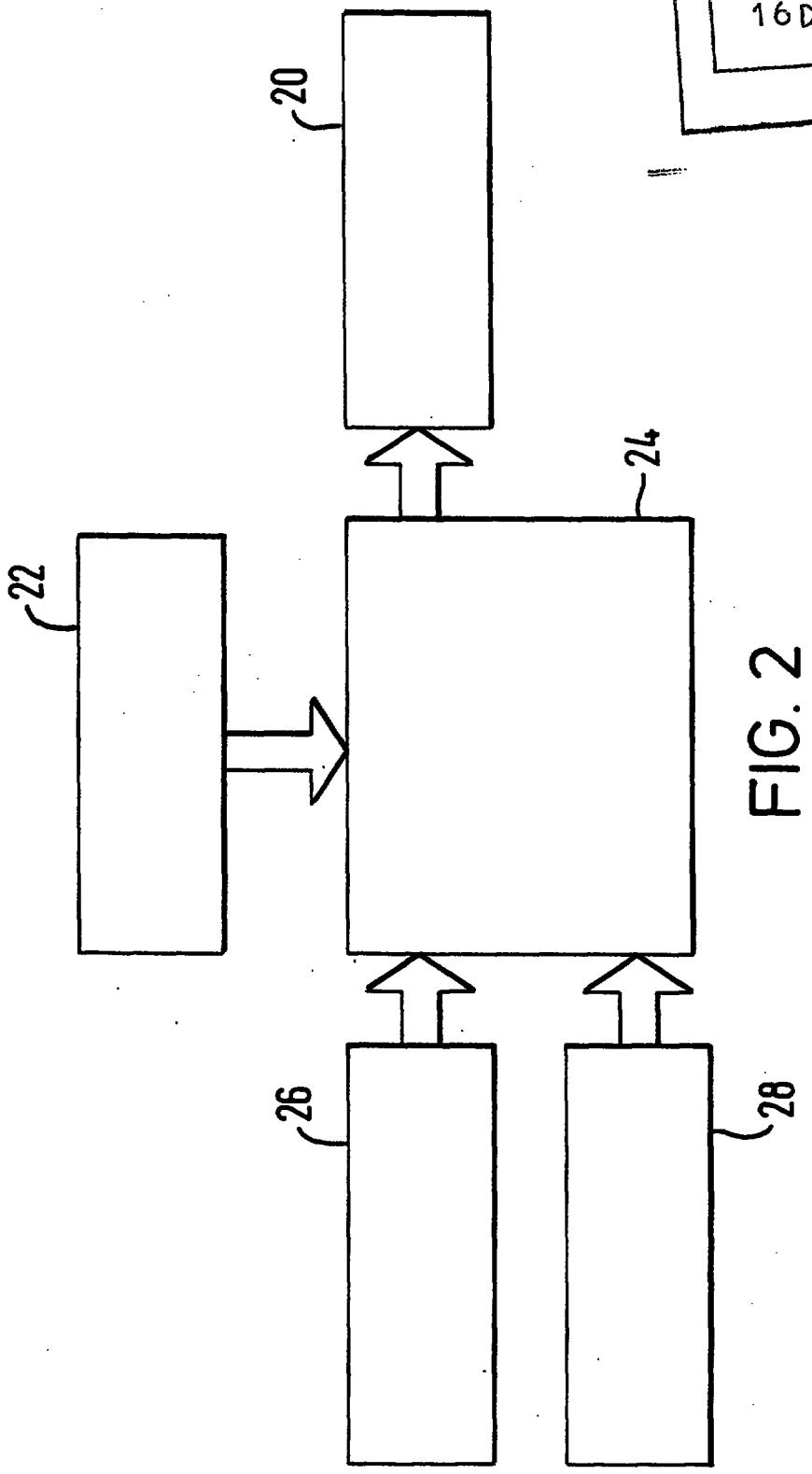

FIG. 2

REPLACEMENT SHEET
16 DEC 1997

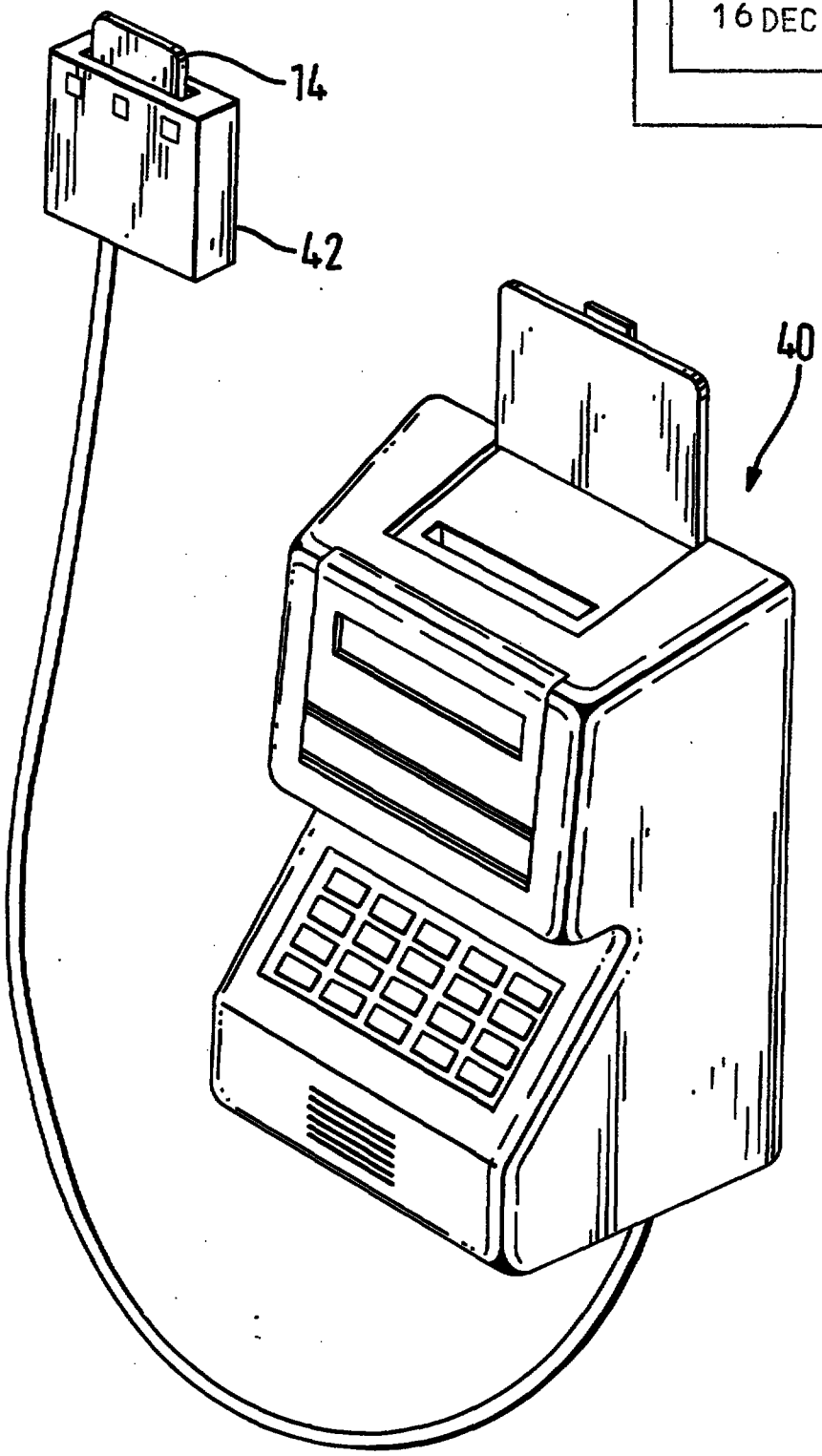

FIG. 3