(12) INTERNATIONAL APPLICATION PUBLISHED UNDER THE PATENT COOPERATION TREATY (PCT)

(19) World Intellectual Property Organization
International Bureau

(43) International Publication Date
4 December 2008 (04.12.2008)

PCT

(10) International Publication Number
WO 2008/145746 A1

(51) International Patent Classification:
B29C 45/30 (2006.01) *B29C 45/28* (2006.01)

(21) International Application Number:
PCT/EP2008/056721

(22) International Filing Date: 30 May 2008 (30.05.2008)

(25) Filing Language: English

(26) Publication Language: English

(30) Priority Data:
07010790.9 31 May 2007 (31.05.2007) EP

(71) Applicant: **ALLIANCE FOR BUSINESS SOLUTIONS A4BS** [BE/BE]; PB 35, Uitbreidingstraat, B-2600 Berchem (BE).

(74) Agents: **MOENS, Marnix, Karel, Christiane** et al.; BIIP CVBA, Culliganlaan 1b, B-1831 Diegem (BE).

(81) Designated States *(unless otherwise indicated, for every kind of national protection available)*: AE, AG, AL, AM, AO, AT, AU, AZ, BA, BB, BG, BH, BR, BW, BY, BZ, CA, CH, CN, CO, CR, CU, CZ, DE, DK, DM, DO, DZ, EC, EE, EG, ES, FI, GB, GD, GE, GH, GM, GT, HN, HR, HU, ID, IL, IN, IS, JP, KE, KG, KM, KN, KP, KR, KZ, LA, LC, LK, LR, LS, LT, LU, LY, MA, MD, ME, MG, MK, MN, MW, MX, MY, MZ, NA, NG, NI, NO, NZ, OM, PG, PH, PL, PT, RO, RS, RU, SC, SD, SE, SG, SK, SL, SM, SV, SY, TJ, TM, TN, TR, TT, TZ, UA, UG, US, UZ, VC, VN, ZA, ZM, ZW.

(84) Designated States *(unless otherwise indicated, for every kind of regional protection available)*: ARIPO (BW, GH, GM, KE, LS, MW, MZ, NA, SD, SL, SZ, TZ, UG, ZM, ZW), Eurasian (AM, AZ, BY, KG, KZ, MD, RU, TJ, TM), European (AT, BE, BG, CH, CY, CZ, DE, DK, EE, ES, FI, FR, GB, GR, HR, HU, IE, IS, IT, LT, LU, LV, MC, MT, NL, NO, PL, PT, RO, SE, SI, SK, TR), OAPI (BF, BJ, CF, CG, CI, CM, GA, GN, GQ, GW, ML, MR, NE, SN, TD, TG).

Published:
— *with international search report*

(54) **Title:** MODIFIED HOT RUNNER SYSTEM S FOR INJECTION BLOW MOLDING

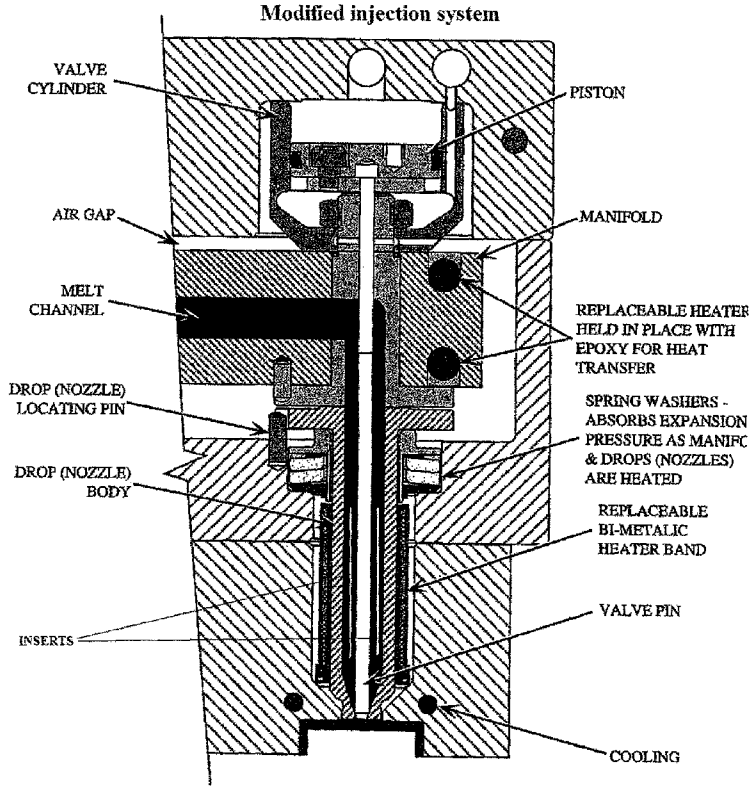

Fig. 1

(57) **Abstract:** An injection blow molding method for making a container comprising the steps of injecting a molten crystallizable polymer in a preform mold via a hot runner system and biaxially stretching the preform by blowing, thereby forming a container, characterized in that said method further comprises means to selectively modify the flow path of the molten crystallizable polymer within the hot runner system.

WO 2008/145746 A1