FIG.1

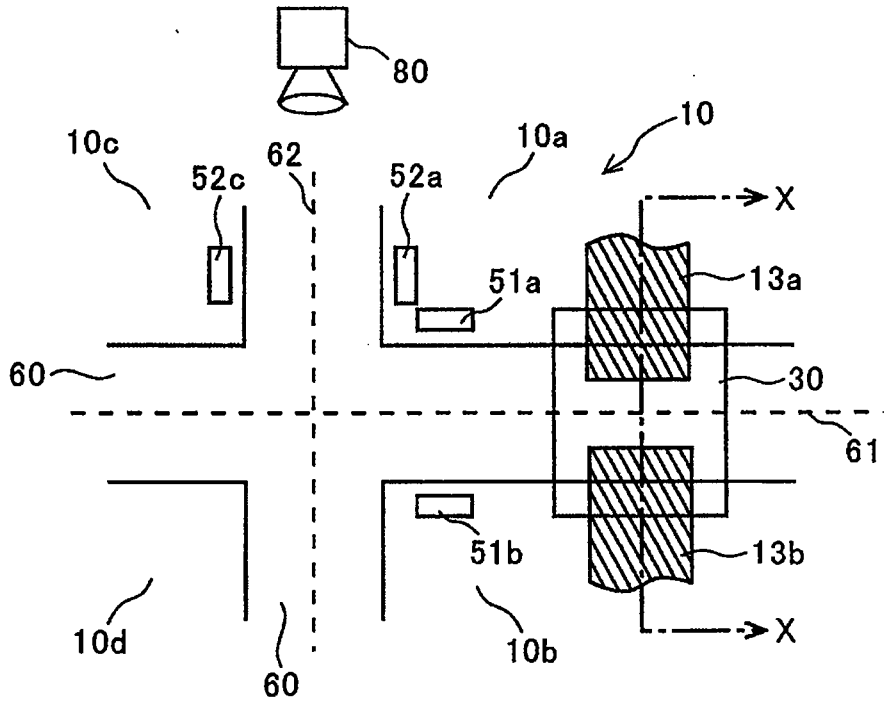
80
10
10c
62
10a
52c
52a
X
51a
13a
60
30
61
51b
13b
10d
60
10b
X

FIG.2

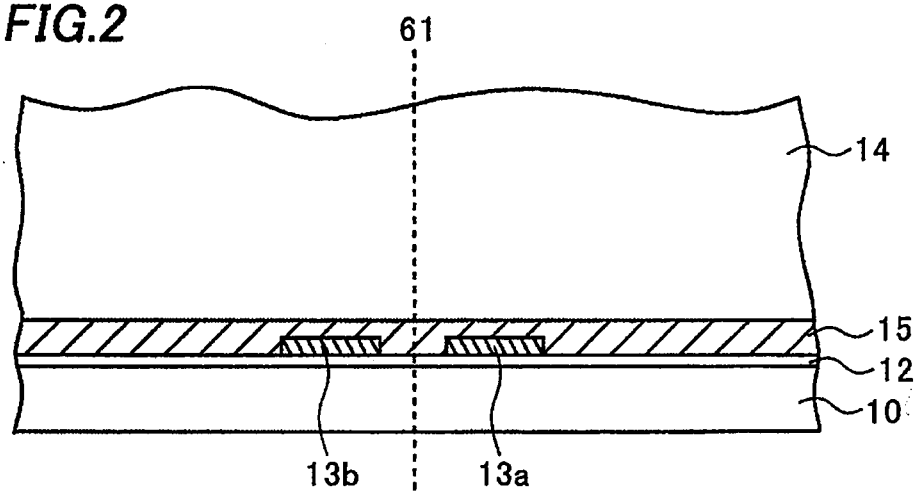
61
14
15
12
10
13b
13a

FIG.3

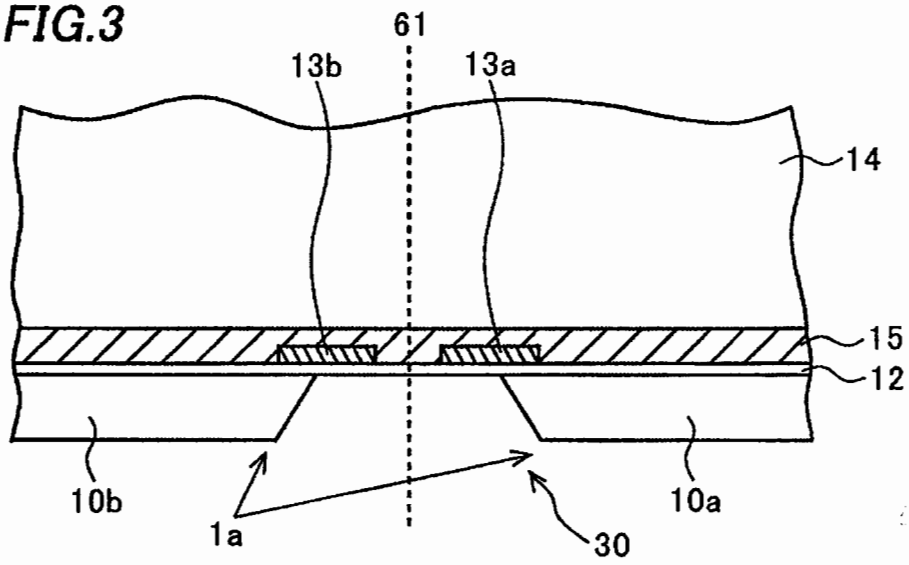

FIG.4

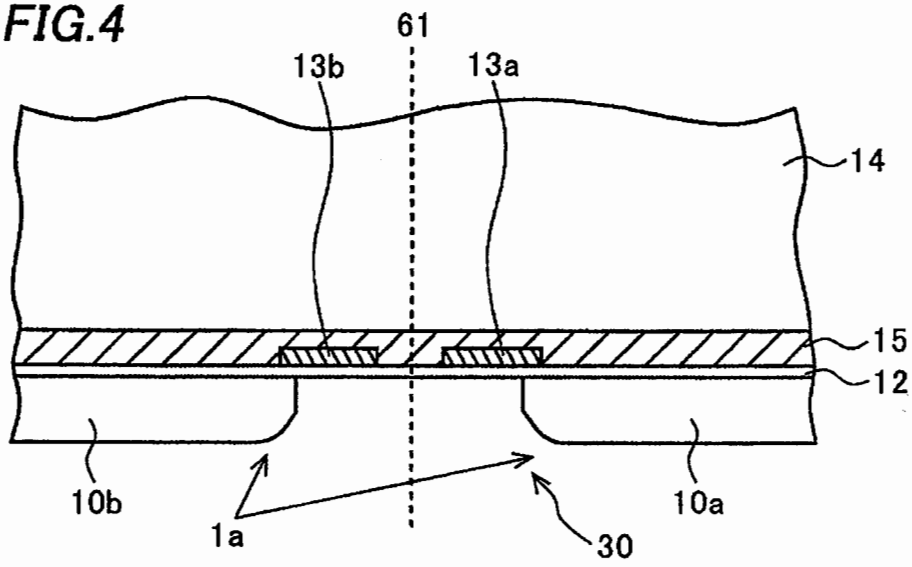

FIG.5

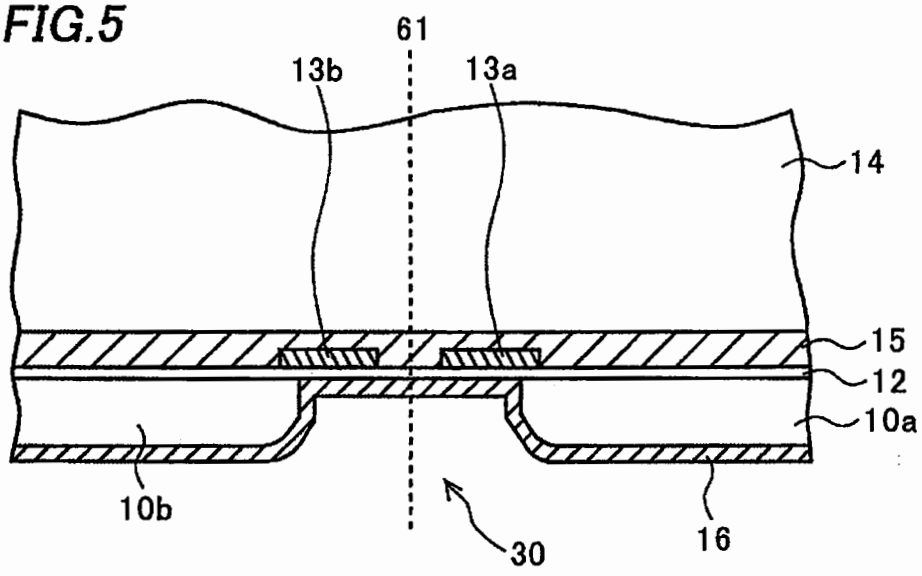
61
13b
13a
14
15
12
10a
10b
30
16

FIG.6

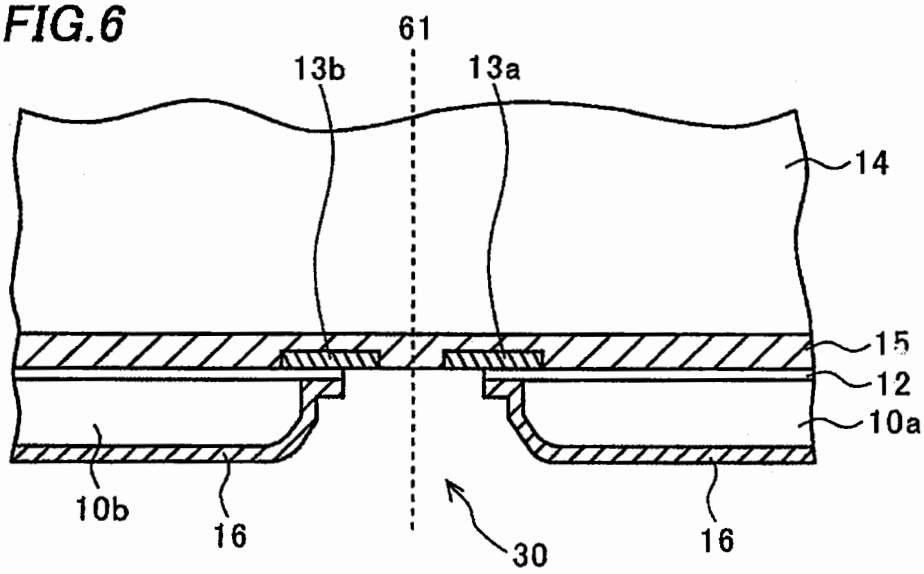
61
13b
13a
14
15
12
10a
10b
16
30
16

FIG.7

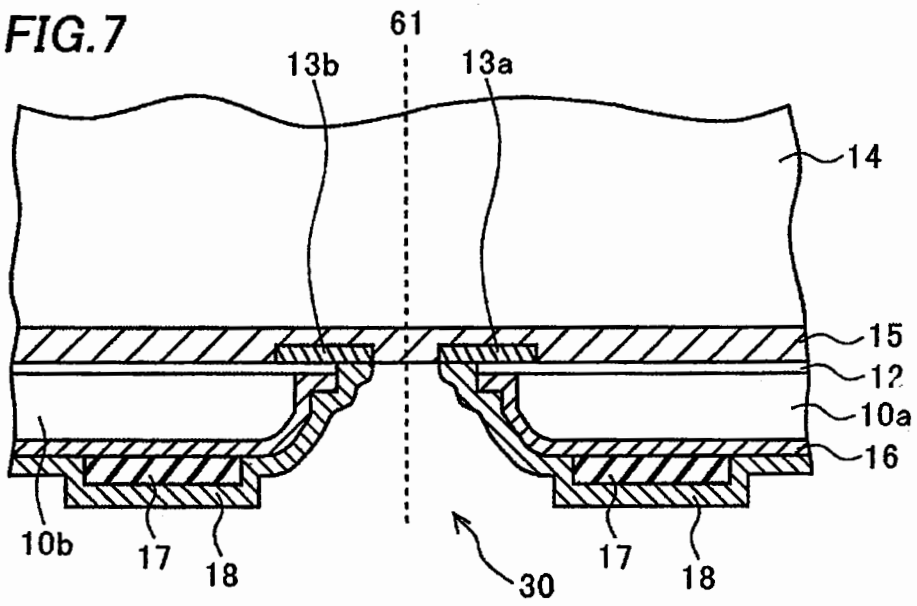
61
13b
13a
14
15
12
10a
16
10b
17
18
30
17
18

FIG.8

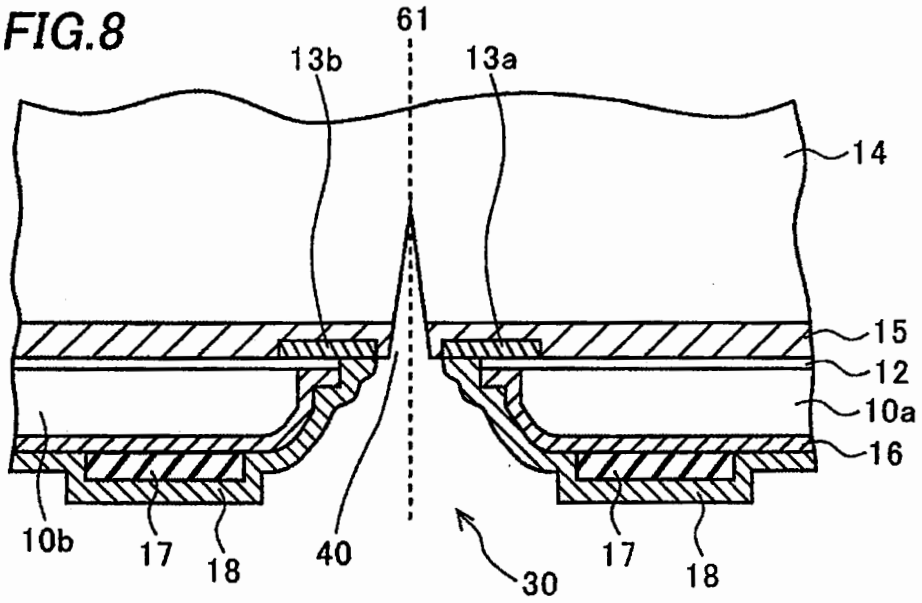
61
13b
13a
14
15
12
10a
16
10b
17
18
40
30
17
18

FIG.9

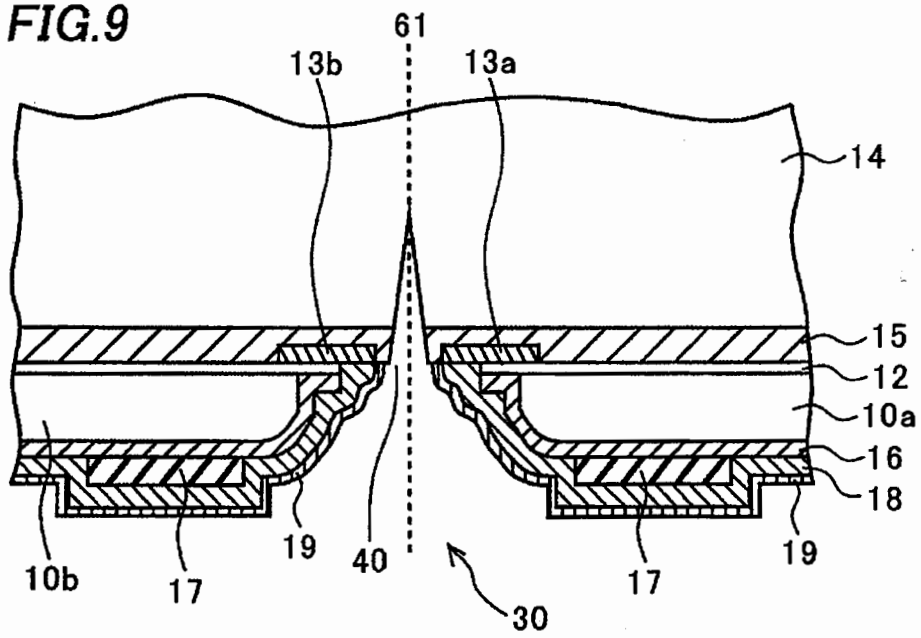
61
13b
13a
14
15
12
10a
16
18
10b
17
19
40
30
17
19

FIG.10

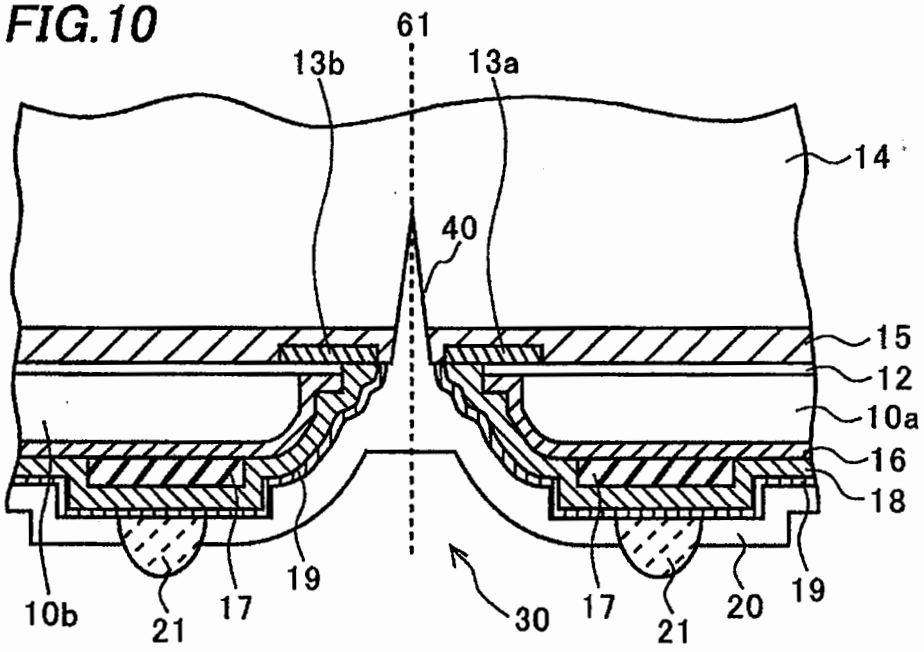
61
13b
13a
14
40
15
12
10a
16
18
10b
21
17
19
30
17
21
20
19

FIG.11

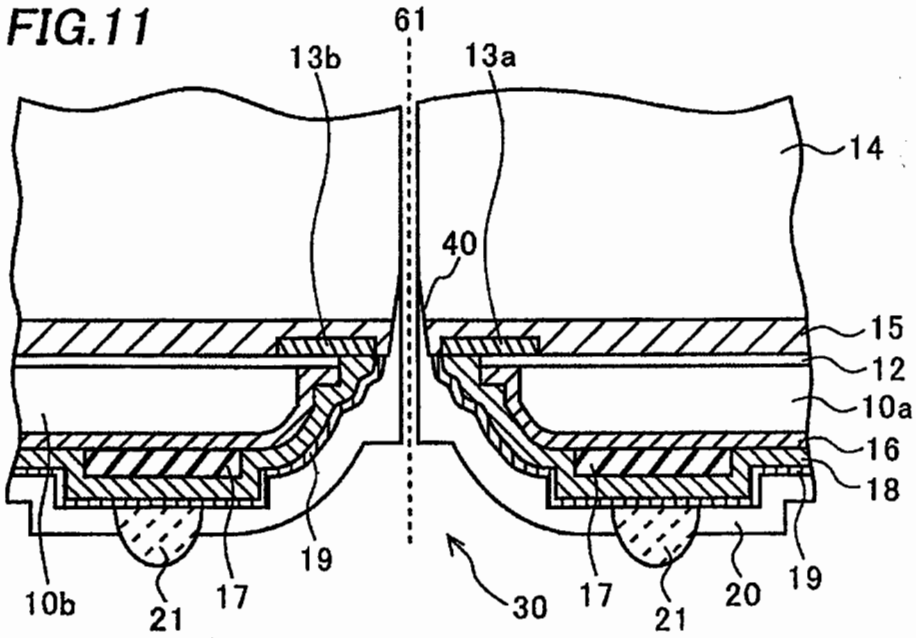
61
13b
13a
14
40
15
12
10a
16
18
10b
21
17
19
30
17
21
20
19

FIG.12

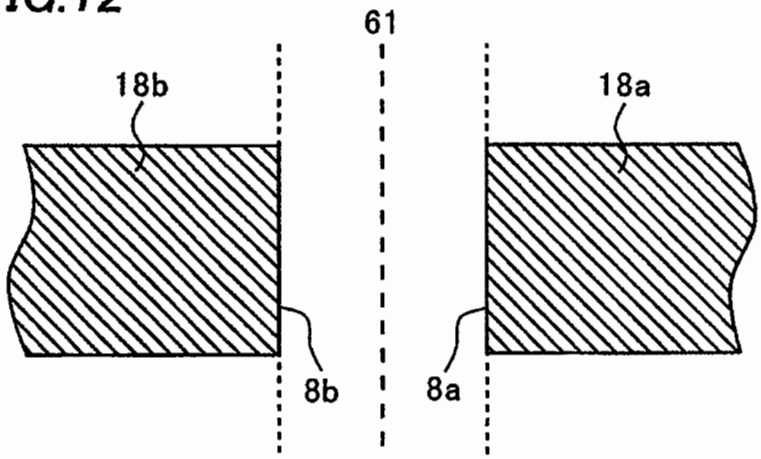
61
18b
18a
8b
8a

FIG.13A
PRIOR ART

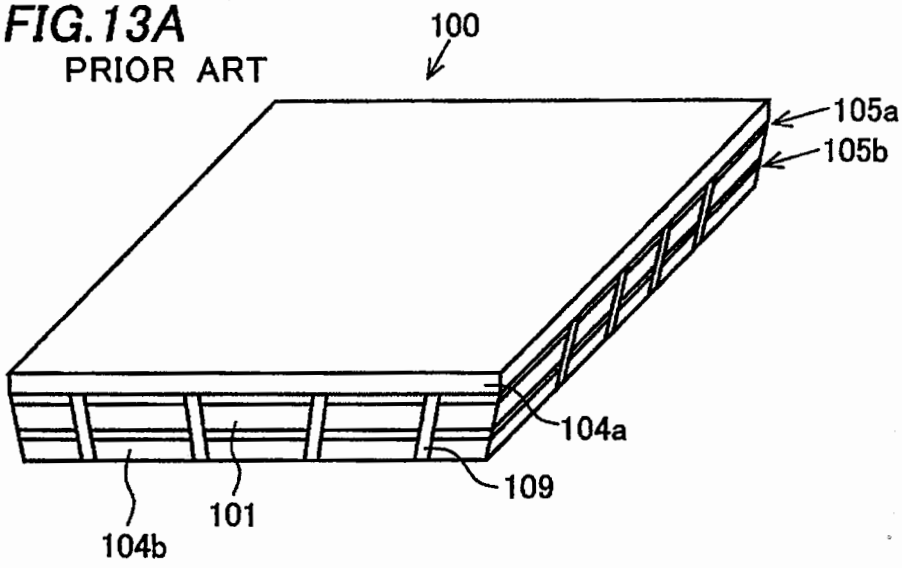

FIG.13B
PRIOR ART

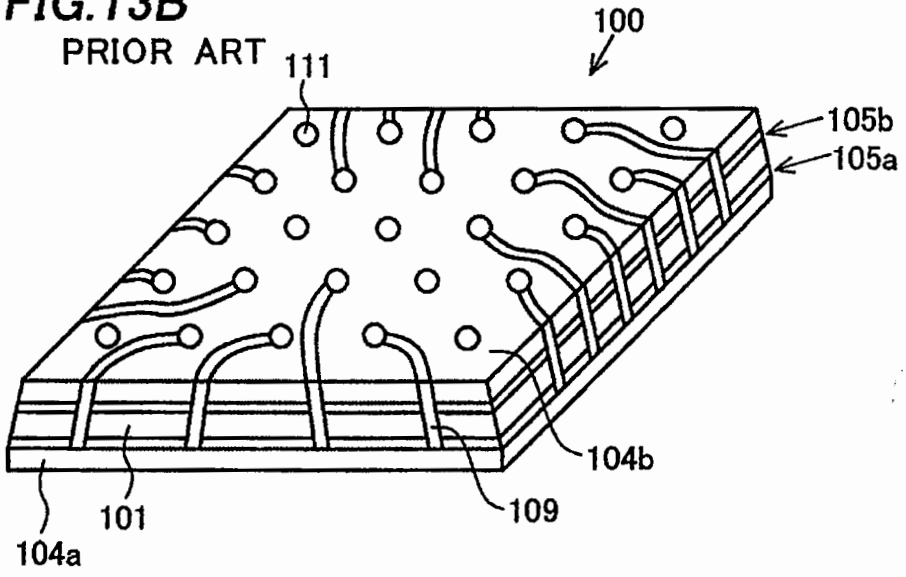

FIG.14 PRIOR ART

