(12) INTERNATIONAL APPLICATION PUBLISHED UNDER THE PATENT COOPERATION TREATY (PCT)

(19) World Intellectual Property Organization
International Bureau

(43) International Publication Date
21 July 2005 (21.07.2005)

PCT

(10) International Publication Number
WO 2005/065642 A3

(51) International Patent Classification:
A61K 9/00 (2006.01) *A61F 9/00* (2006.01)

(21) International Application Number:
PCT/US2004/041044

(22) International Filing Date:
9 December 2004 (09.12.2004)

(25) Filing Language: English

(26) Publication Language: English

(30) Priority Data:
60/532,022 22 December 2003 (22.12.2003) US

(71) Applicant *(for all designated States except US)*: **BAUSCH & LOMB INCORPORATED** [US/US]; One Bausch & Lomb Place, Rochester, NY 14604-2701 (US).

(72) Inventors; and

(75) Inventors/Applicants *(for US only)*: **RENNER, Steven, B.** [US/US]; 9 Old Acre Lane, Rochester, NY 14618 (US). **JONASSE, Matthew** [US/US]; 16 Orchard Terrace, Sodus, NY 14551 (US).

(74) Agents: **THOMAS, John, E.** et al.; Bausch & Lomb Incorporated, One Bausch & Lomb Place, Rochester, NY 14604-2701 (US).

(81) Designated States *(unless otherwise indicated, for every kind of national protection available)*: AE, AG, AL, AM, AT, AU, AZ, BA, BB, BG, BR, BW, BY, BZ, CA, CH, CN, CO, CR, CU, CZ, DE, DK, DM, DZ, EC, EE, EG, ES, FI, GB, GD, GE, GH, GM, HR, HU, ID, IL, IN, IS, JP, KE, KG, KP, KR, KZ, LC, LK, LR, LS, LT, LU, LV, MA, MD, MG, MK, MN, MW, MX, MZ, NA, NI, NO, NZ, OM, PG, PH, PL, PT, RO, RU, SC, SD, SE, SG, SK, SL, SY, TJ, TM, TN, TR, TT, TZ, UA, UG, US, UZ, VC, VN, YU, ZA, ZM, ZW.

(84) Designated States *(unless otherwise indicated, for every kind of regional protection available)*: ARIPO (BW, GH, GM, KE, LS, MW, MZ, NA, SD, SL, SZ, TZ, UG, ZM, ZW), Eurasian (AM, AZ, BY, KG, KZ, MD, RU, TJ, TM), European (AT, BE, BG, CH, CY, CZ, DE, DK, EE, ES, FI, FR, GB, GR, HU, IE, IS, IT, LT, LU, MC, NL, PL, PT, RO, SE, SI, SK, TR), OAPI (BF, BJ, CF, CG, CI, CM, GA, GN, GQ, GW, ML, MR, NE, SN, TD, TG).

Declaration under Rule 4.17:
— *as to the identity of the inventor (Rule 4.17(i))*

Published:
— *with international search report*
— *before the expiration of the time limit for amending the claims and to be republished in the event of receipt of amendments*

(88) Date of publication of the international search report:
11 May 2006

For two-letter codes and other abbreviations, refer to the "Guidance Notes on Codes and Abbreviations" appearing at the beginning of each regular issue of the PCT Gazette.

(54) Title: DRUG DELIVERY DEVICE

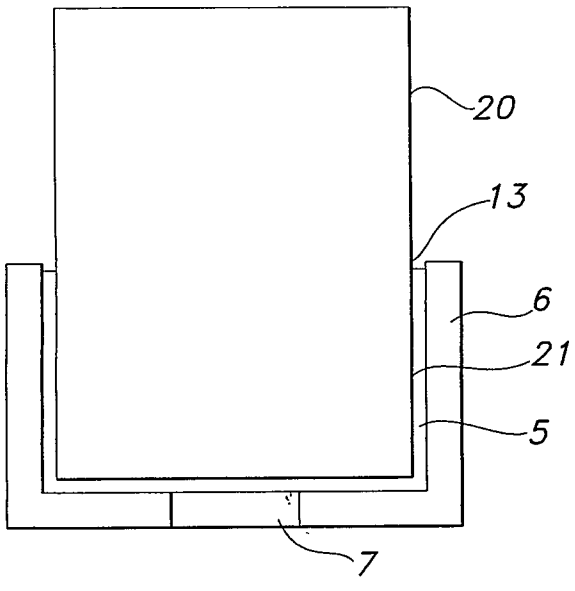

(57) Abstract: A drug delivery device for placement in the eye includes a drug core comprising a pharmaceutically active agent, and a holder that holds the drug core. The holder is made of a material impermeable to passage of the active agent and includes an opening for passage of the pharmaceutically agent therethrough to eye tissue. The device includes a layer of material permeable to passage of the active agent. In assembling the device, a pin or weight, having a shape similar to the drug core, is used during curing of the permeable material.

WO 2005/065642 A3