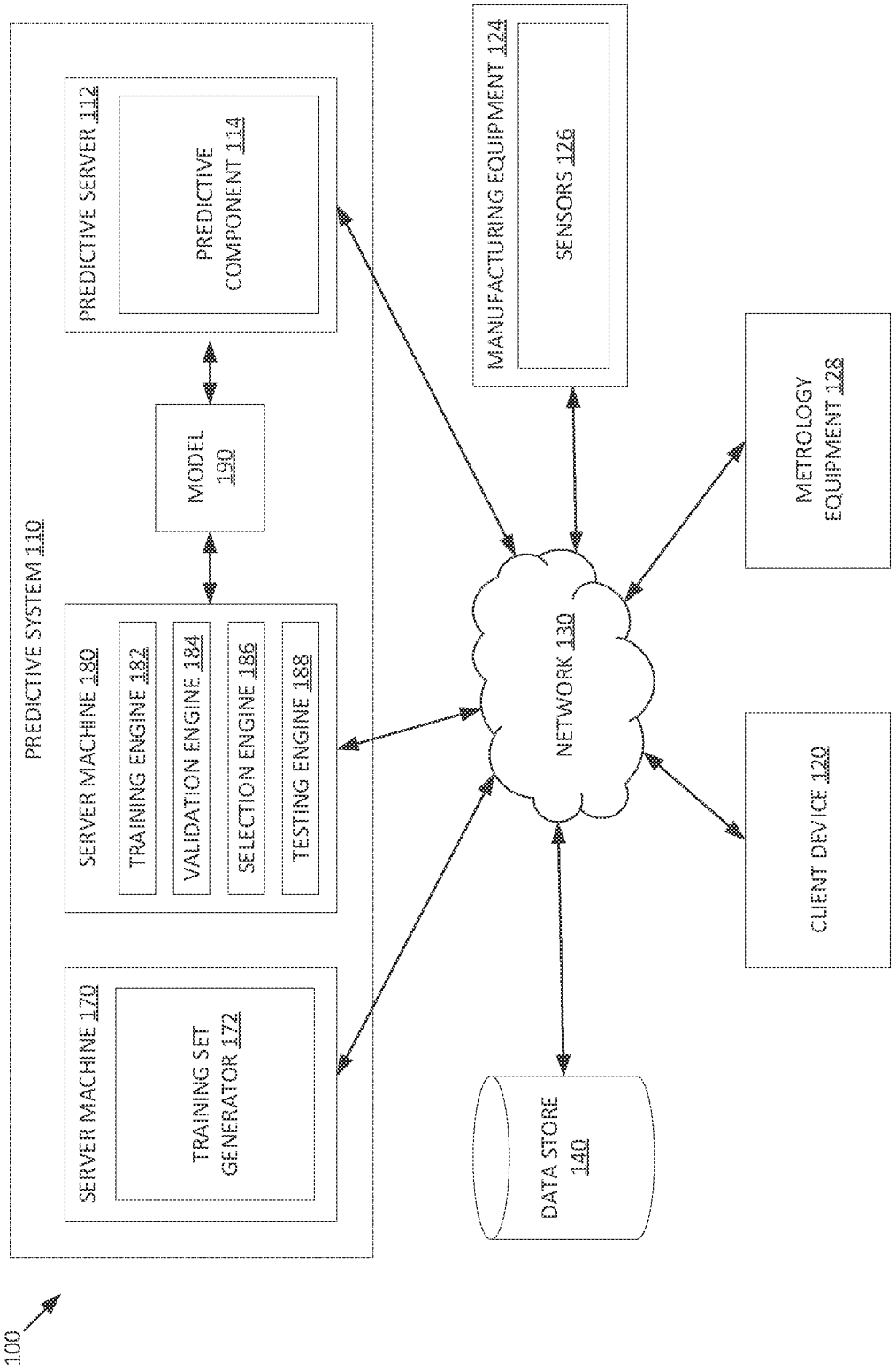
100
PREDICTIVE SYSTEM 110
PREDICTIVE SERVER 112
PREDICTIVE COMPONENT 114
MODEL 190
SERVER MACHINE 180
TRAINING ENGINE 182
VALIDATION ENGINE 184
SELECTION ENGINE 186
TESTING ENGINE 188
SERVER MACHINE 170
TRAINING SET GENERATOR 172
MANUFACTURING EQUIPMENT 124
SENSORS 126
METROLOGY EQUIPMENT 128
NETWORK 130
CLIENT DEVICE 120
DATA STORE 140

FIG. 1

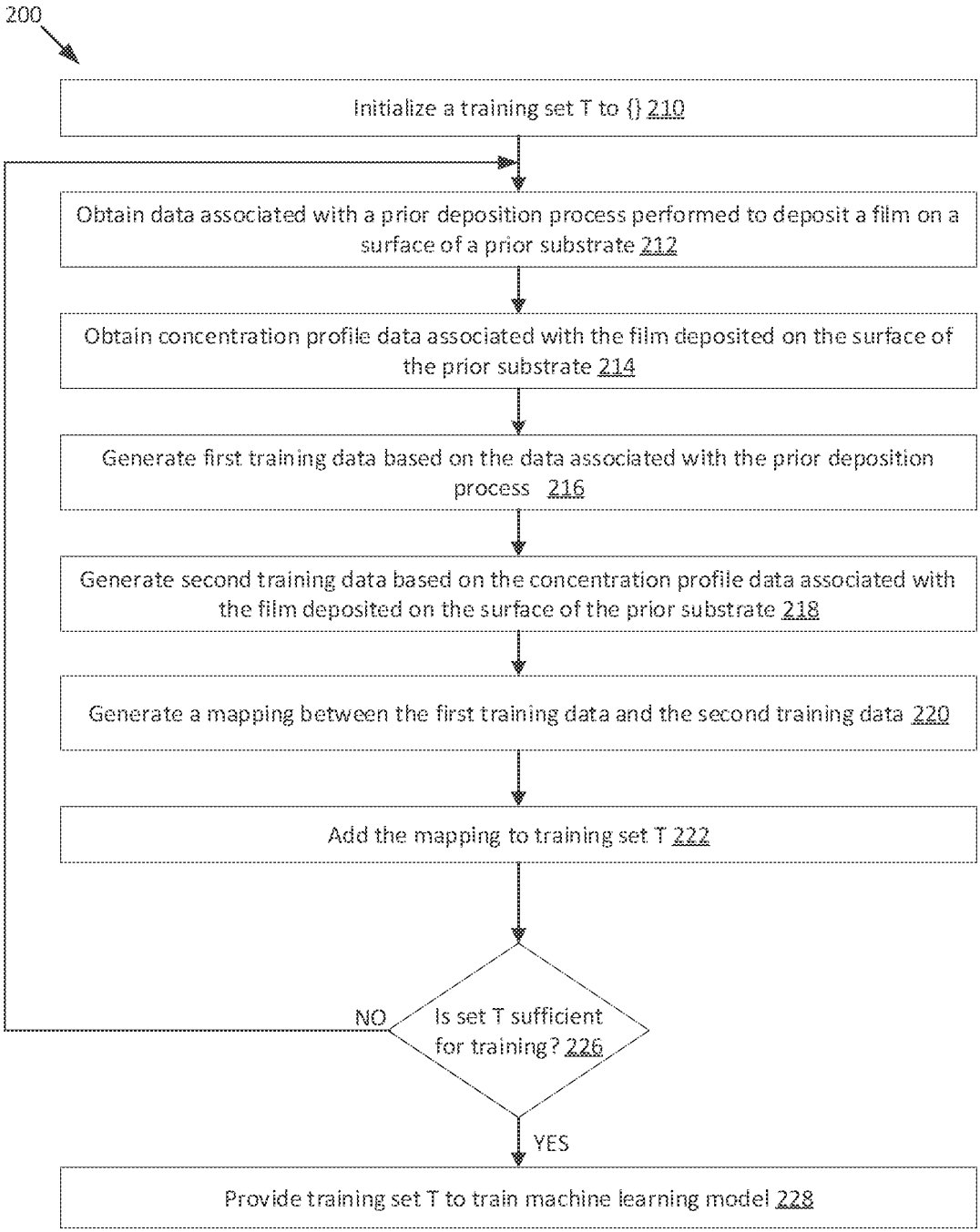
200
Initialize a training set T to {} 210
Obtain data associated with a prior deposition process performed to deposit a film on a surface of a prior substrate 212
Obtain concentration profile data associated with the film deposited on the surface of the prior substrate 214
Generate first training data based on the data associated with the prior deposition process 216
Generate second training data based on the concentration profile data associated with the film deposited on the surface of the prior substrate 218
Generate a mapping between the first training data and the second training data 220
Add the mapping to training set T 222
Is set T sufficient for training? 226
NO
YES
Provide training set T to train machine learning model 228

FIG. 2

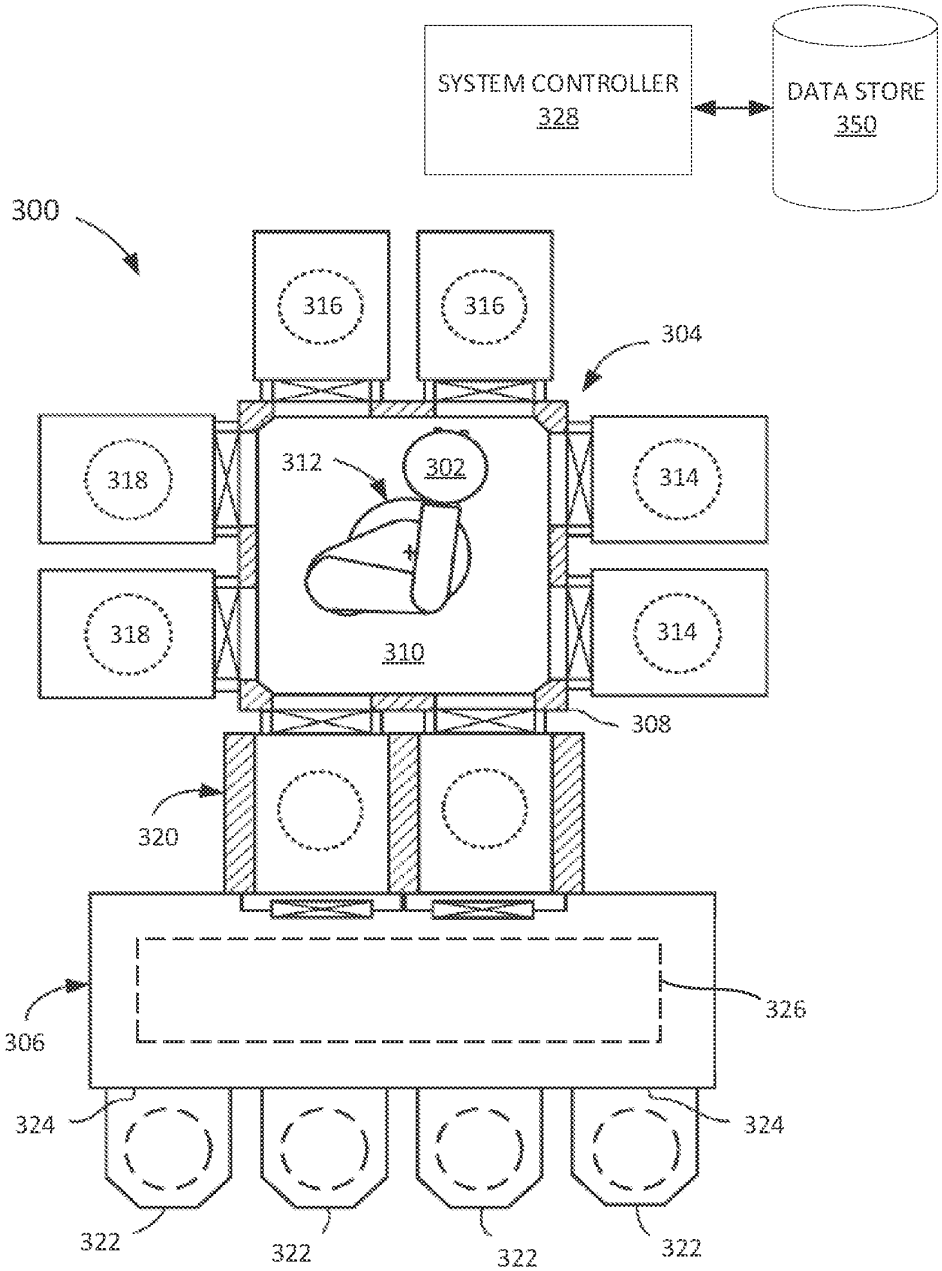
SYSTEM CONTROLLER
328
DATA STORE
350
300
316
316
304
318
312
302
314
318
314
310
308
320
306
326
324
324
322
322
322
322

FIG. 3

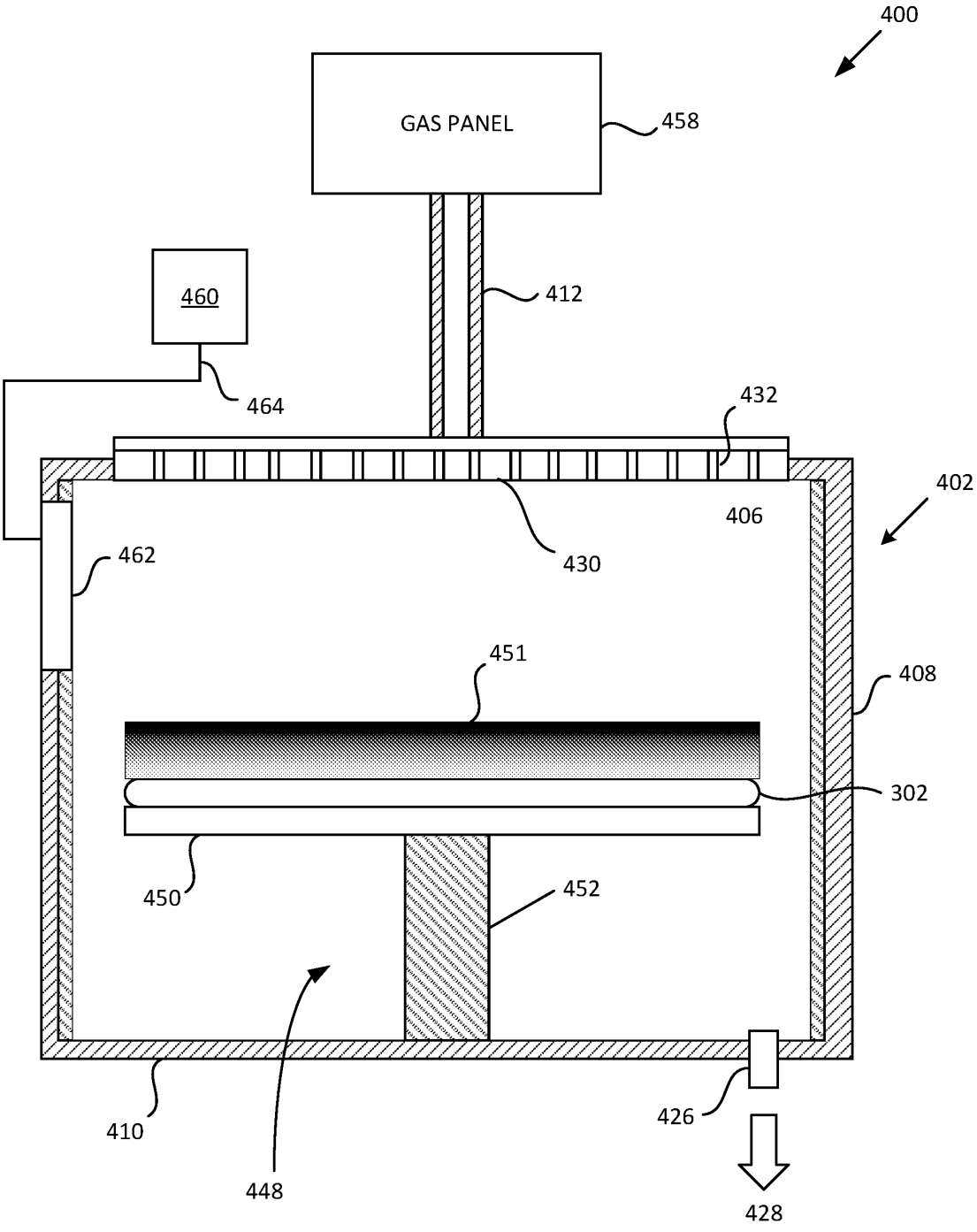
400
GAS PANEL
458
460
412
464
432
406
402
462
430
451
408
302
450
452
410
448
426
428

FIG. 4

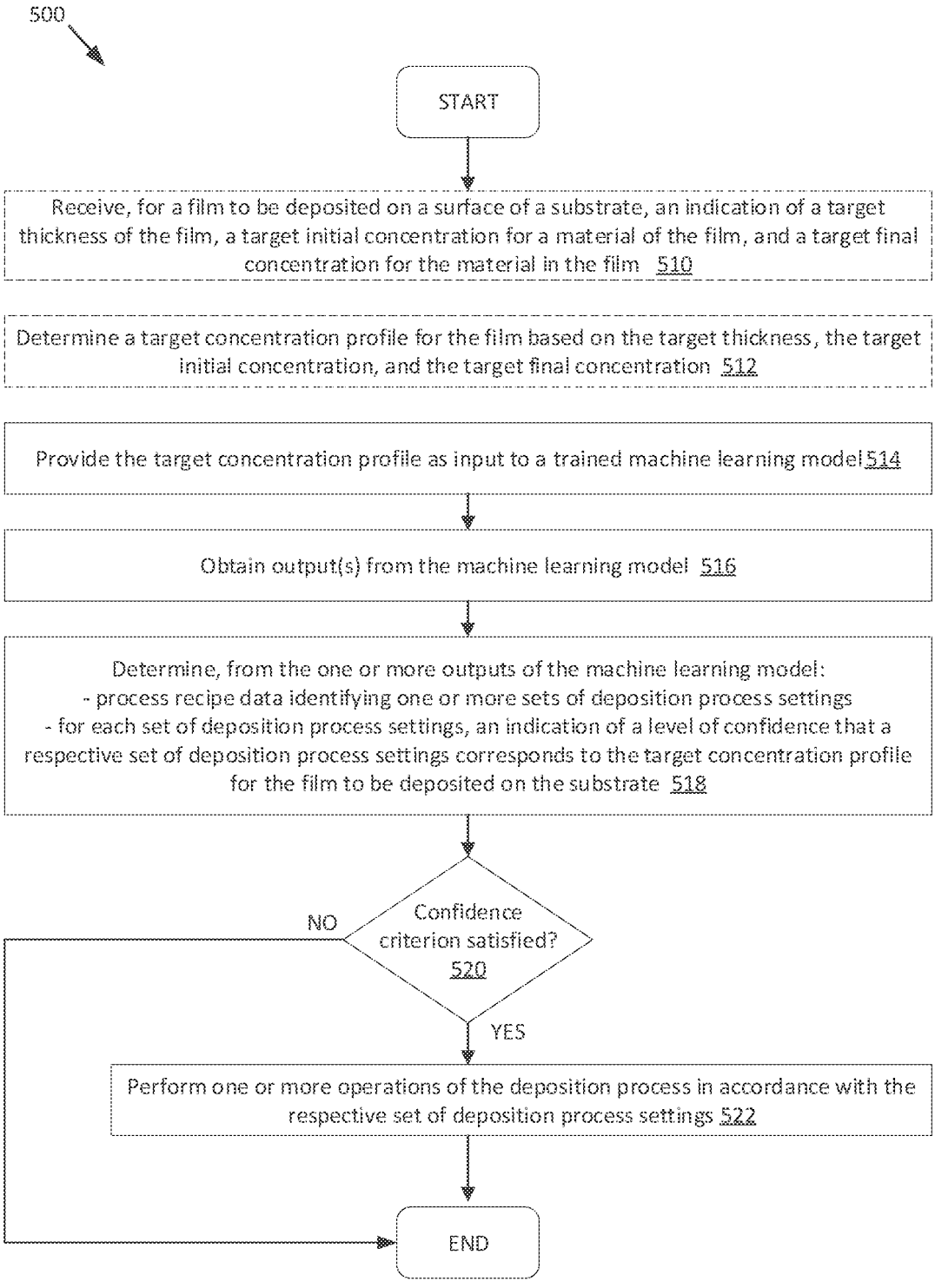
500
START
Receive, for a film to be deposited on a surface of a substrate, an indication of a target thickness of the film, a target initial concentration for a material of the film, and a target final concentration for the material in the film 510
Determine a target concentration profile for the film based on the target thickness, the target initial concentration, and the target final concentration 512
Provide the target concentration profile as input to a trained machine learning model 514
Obtain output(s) from the machine learning model 516
Determine, from the one or more outputs of the machine learning model:
- process recipe data identifying one or more sets of deposition process settings
- for each set of deposition process settings, an indication of a level of confidence that a respective set of deposition process settings corresponds to the target concentration profile for the film to be deposited on the substrate 518
Confidence criterion satisfied? 520
NO
YES
Perform one or more operations of the deposition process in accordance with the respective set of deposition process settings 522
END

FIG. 5

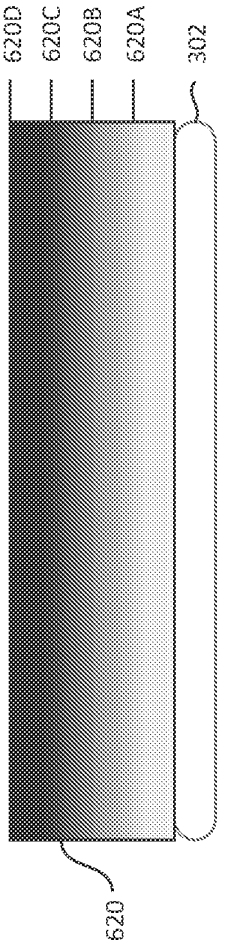

FIG. 6A

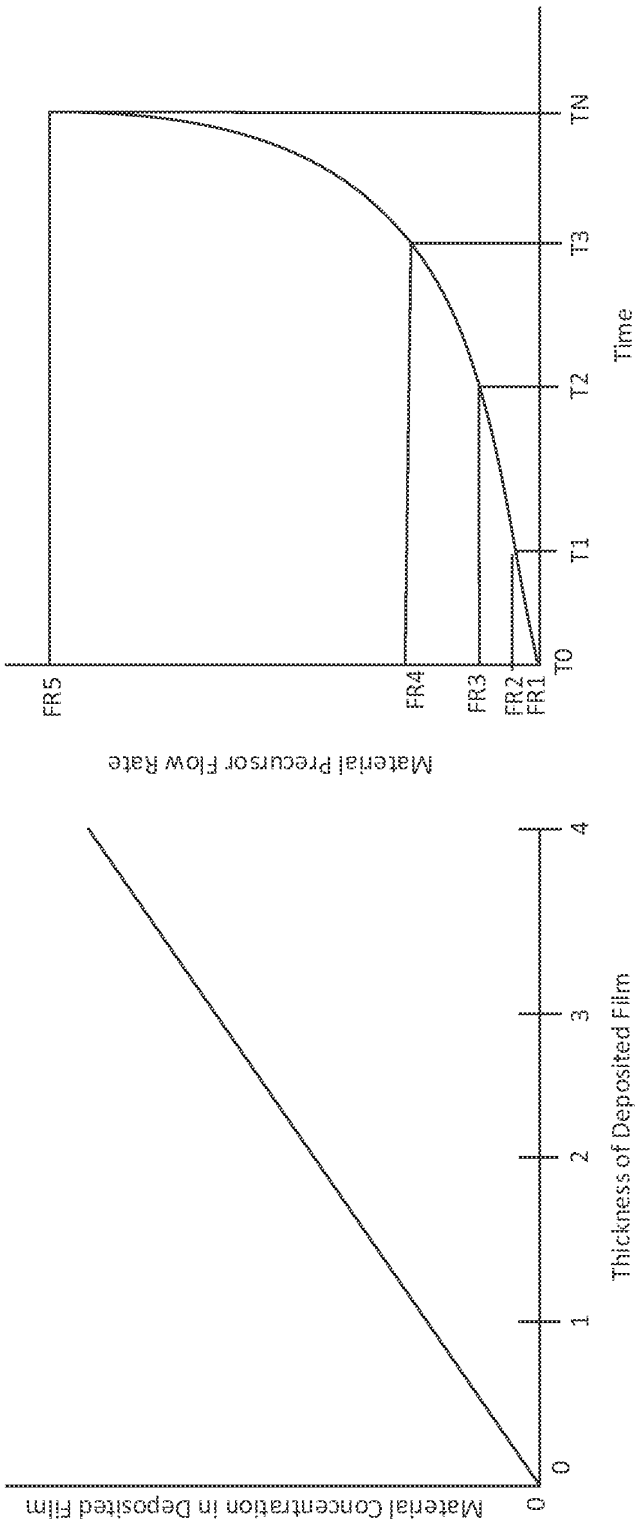

FIG. 6B

FIG. 6C

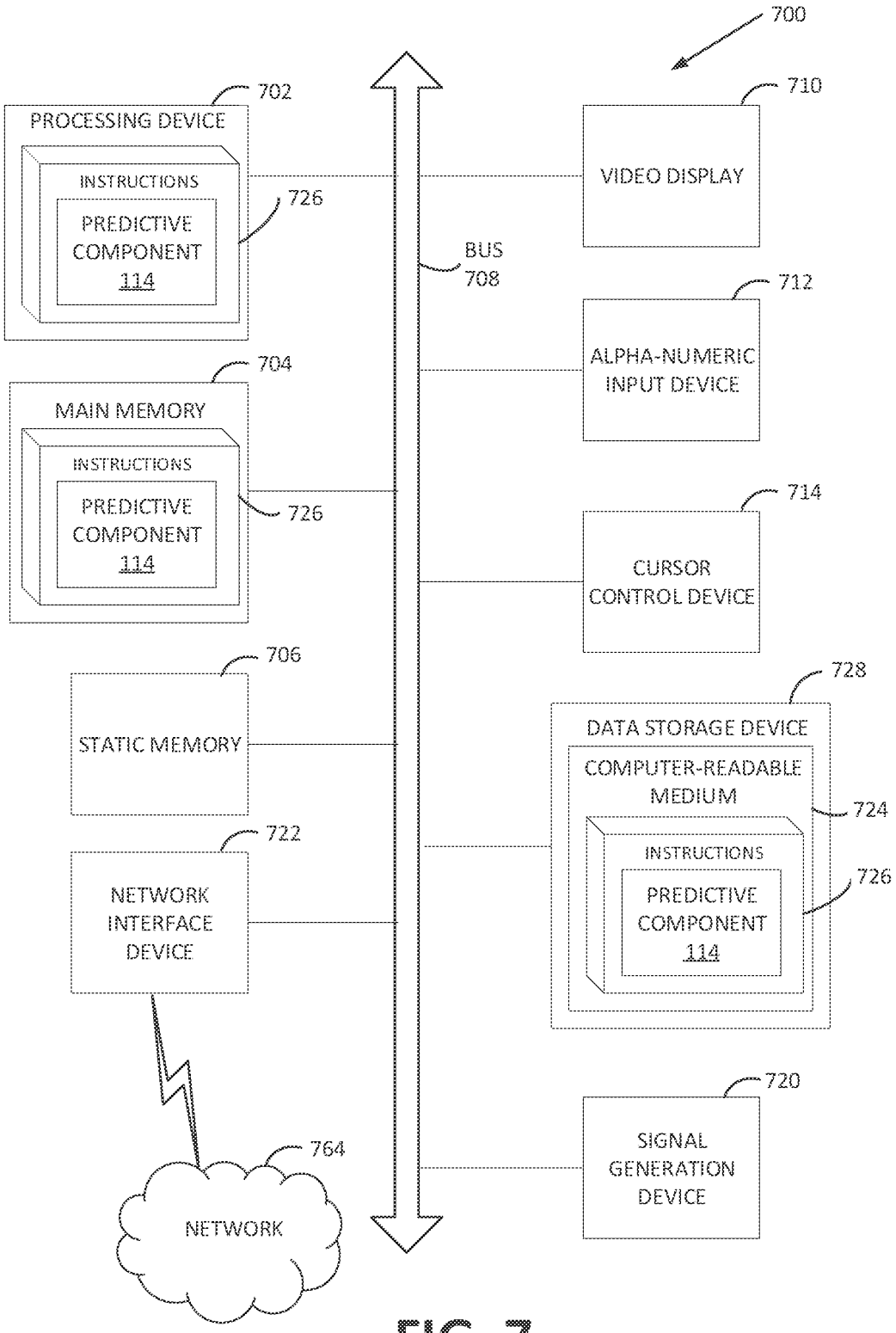
700
PROCESSING DEVICE
702
INSTRUCTIONS
PREDICTIVE COMPONENT 114
726
MAIN MEMORY
704
INSTRUCTIONS
PREDICTIVE COMPONENT 114
726
STATIC MEMORY
706
NETWORK INTERFACE DEVICE
722
NETWORK
764
BUS
708
VIDEO DISPLAY
710
ALPHA-NUMERIC INPUT DEVICE
712
CURSOR CONTROL DEVICE
714
DATA STORAGE DEVICE
728
COMPUTER-READABLE MEDIUM
724
INSTRUCTIONS
PREDICTIVE COMPONENT 114
726
SIGNAL GENERATION DEVICE
720

FIG. 7