FIG.1

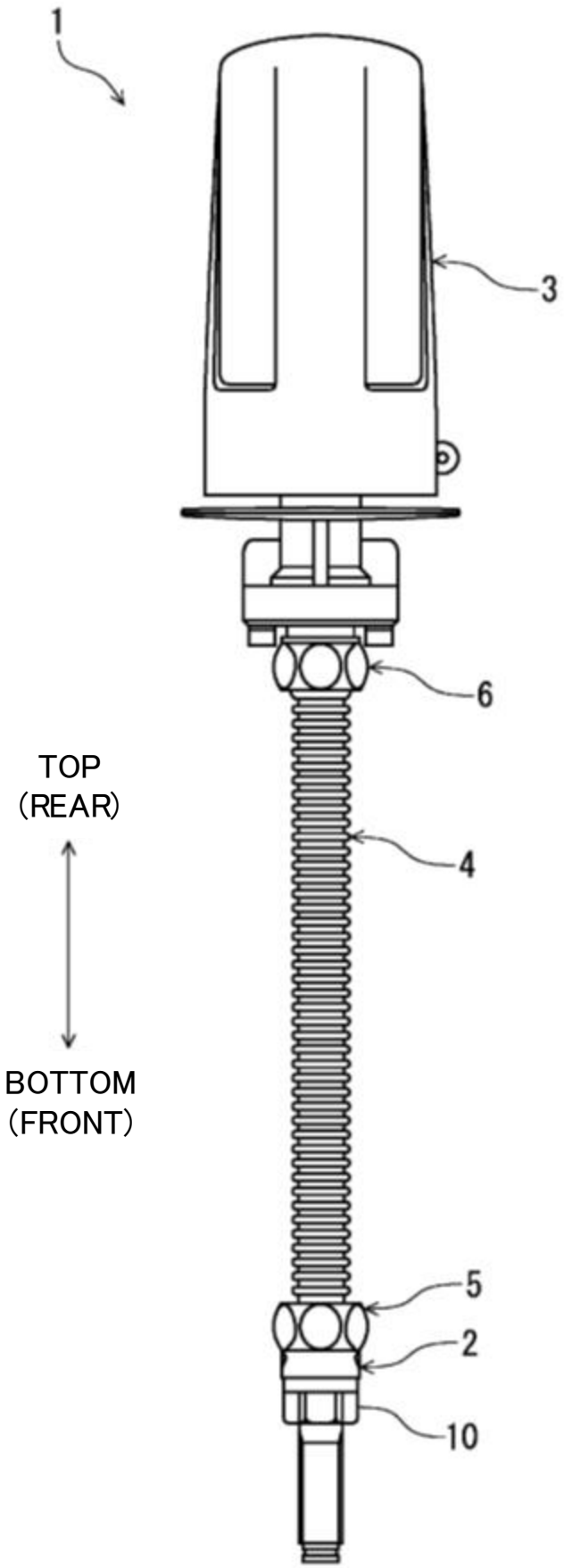

FIG.2

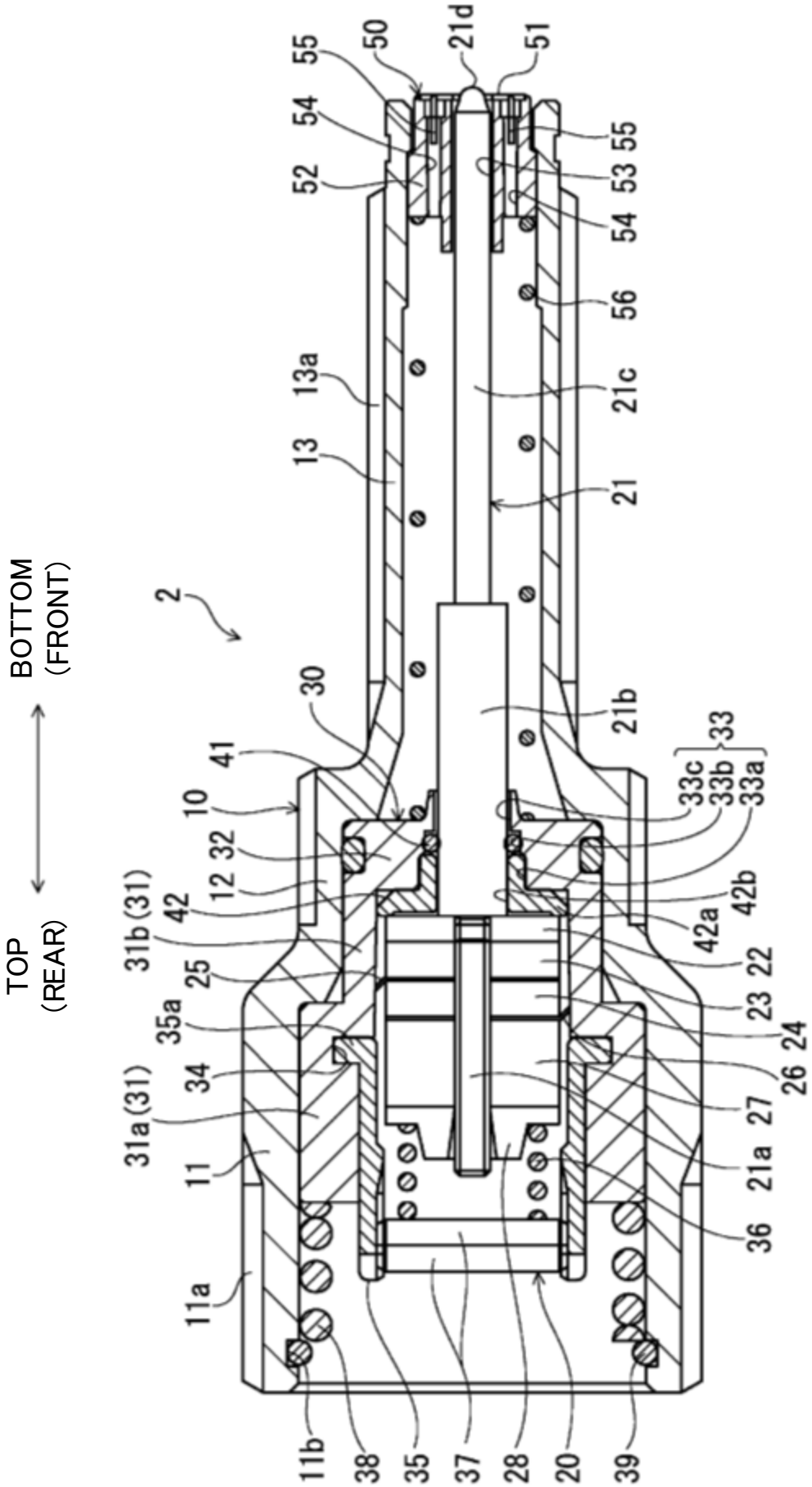
BOTTOM
(FRONT)
TOP
(REAR)
2
10
11
11a
11b
12
13
13a
20
21
21a
21b
21c
21d
22
23
24
25
26
27
28
30
31a(31)
31b(31)
32
33
33a
33b
33c
34
35
35a
36
37
38
39
41
42
42a
42b
50
51
52
53
54
55
56