(12) INTERNATIONAL APPLICATION PUBLISHED UNDER THE PATENT COOPERATION TREATY (PCT)

(19) World Intellectual Property Organization
International Bureau

(43) International Publication Date
30 May 2025 (30.05.2025)

WIPO | PCT

(10) International Publication Number
WO 2025/111217 A1

(51) International Patent Classification:
H01L 21/683 (2006.01) *H01L 21/67* (2006.01)
H01L 21/687 (2006.01)

(21) International Application Number:
PCT/US2024/056339

(22) International Filing Date:
18 November 2024 (18.11.2024)

(25) Filing Language: English

(26) Publication Language: English

(30) Priority Data:
18/516,849 21 November 2023 (21.11.2023) US

(71) Applicant: **APPLIED MATERIALS, INC.** [US/US]; 3050 Bowers Avenue, Santa Clara, California 95054 (US).

(72) Inventor: **BHAT, Sanjay**; #02-03/04, 10 Science Park Road, The Alpha Science Park II, Singapore 117684 (SG).

(74) Agent: **PATEL, Ronak A.** et al.; MOSER TABOADA, 1040 Broad Street, Suite 103, Shrewsbury, New Jersey 07702 (US).

(81) Designated States *(unless otherwise indicated, for every kind of national protection available)*: AE, AG, AL, AM, AO, AT, AU, AZ, BA, BB, BG, BH, BN, BR, BW, BY, BZ, CA, CH, CL, CN, CO, CR, CU, CV, CZ, DE, DJ, DK, DM, DO, DZ, EC, EE, EG, ES, FI, GB, GD, GE, GH, GM, GT, HN, HR, HU, ID, IL, IN, IQ, IR, IS, IT, JM, JO, JP, KE, KG, KH, KN, KP, KR, KW, KZ, LA, LC, LK, LR, LS, LU, LY, MA, MD, MG, MK, MN, MU, MW, MX, MY, MZ, NA, NG, NI, NO, NZ, OM, PA, PE, PG, PH, PL, PT, QA, RO, RS, RU, RW, SA, SC, SD, SE, SG, SK, SL, ST, SV, SY, TH, TJ, TM, TN, TR, TT, TZ, UA, UG, US, UZ, VC, VN, WS, ZA, ZM, ZW.

(84) Designated States *(unless otherwise indicated, for every kind of regional protection available)*: ARIPO (BW, CV, GH, GM, KE, LR, LS, MW, MZ, NA, RW, SC, SD, SL, ST, SZ, TZ, UG, ZM, ZW), Eurasian (AM, AZ, BY, KG, KZ, RU, TJ, TM), European (AL, AT, BE, BG, CH, CY, CZ,

(54) Title: MULTIZONE COATED VACUUM CHUCK FOR IR MEASUREMENT

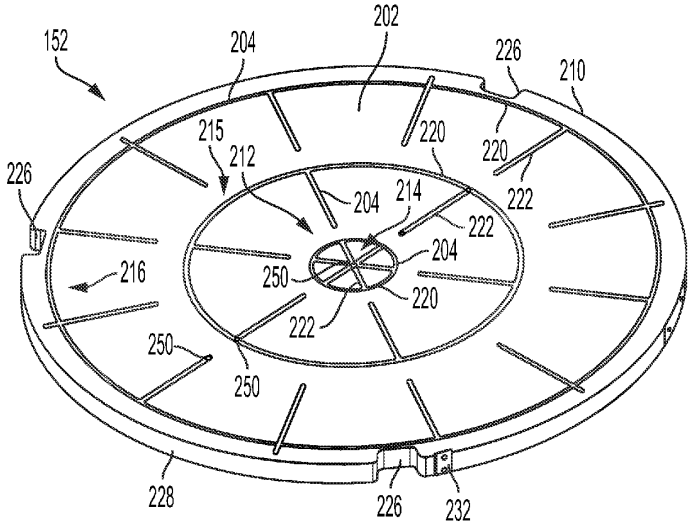

FIG. 2

(57) Abstract: Embodiments of chuck plates for a substrate support are provided herein. In some embodiments, the chuck plate includes an upper surface defining a support surface for a substrate and having a coating comprising a material with less reflectivity than a base material of the chuck plate, wherein the upper surface includes a plurality of vacuum grooves, wherein the plurality of vacuum grooves are arranged in a plurality of zones that are fluidly independent from each other along the upper surface and fluidly coupled to a common vacuum port disposed at a lower surface of the chuck plate.

WO 2025/111217 A1

[Continued on next page]

DE, DK, EE, ES, FI, FR, GB, GR, HR, HU, IE, IS, IT, LT, LU, LV, MC, ME, MK, MT, NL, NO, PL, PT, RO, RS, SE, SI, SK, SM, TR), OAPI (BF, BJ, CF, CG, CI, CM, GA, GN, GQ, GW, KM, ML, MR, NE, SN, TD, TG).

Published:

— *with international search report (Art. 21(3))*