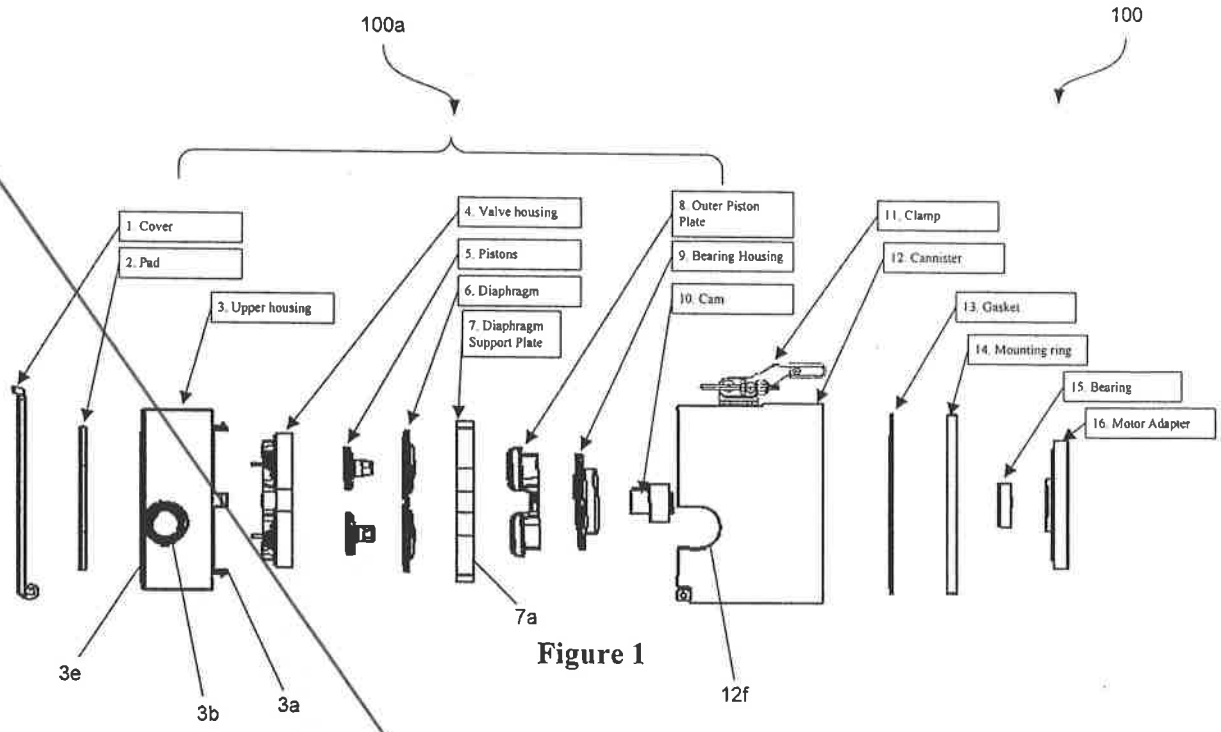
100a
100
1. Cover
2. Pad
3. Upper housing
4. Valve housing
5. Pistons
6. Diaphragm
7. Diaphragm Support Plate
8. Outer Piston Plate
9. Bearing Housing
10. Cam
11. Clamp
12. Cannister
13. Gasket
14. Mounting ring
15. Bearing
16. Motor Adapter
7a
3e
3b
3a
12f

Figure 1

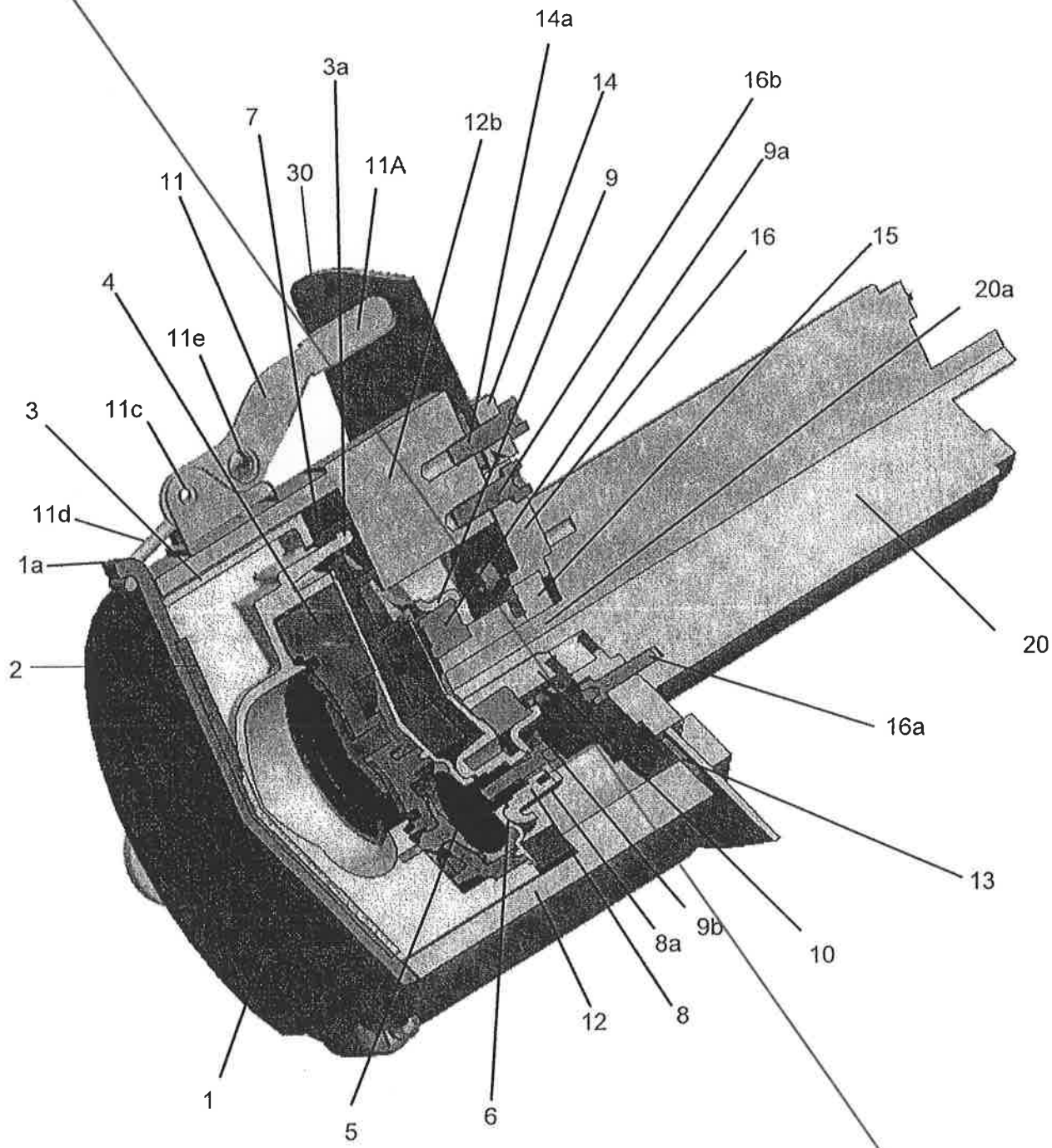
14a
3a
14
16b
7
12b
9a
30
11A
9
11
16
15
4
20a
11e
3
11c
11d
1a
20
2
16a
13
9b
8a
10
12
8
1
5
6

Figure 1a

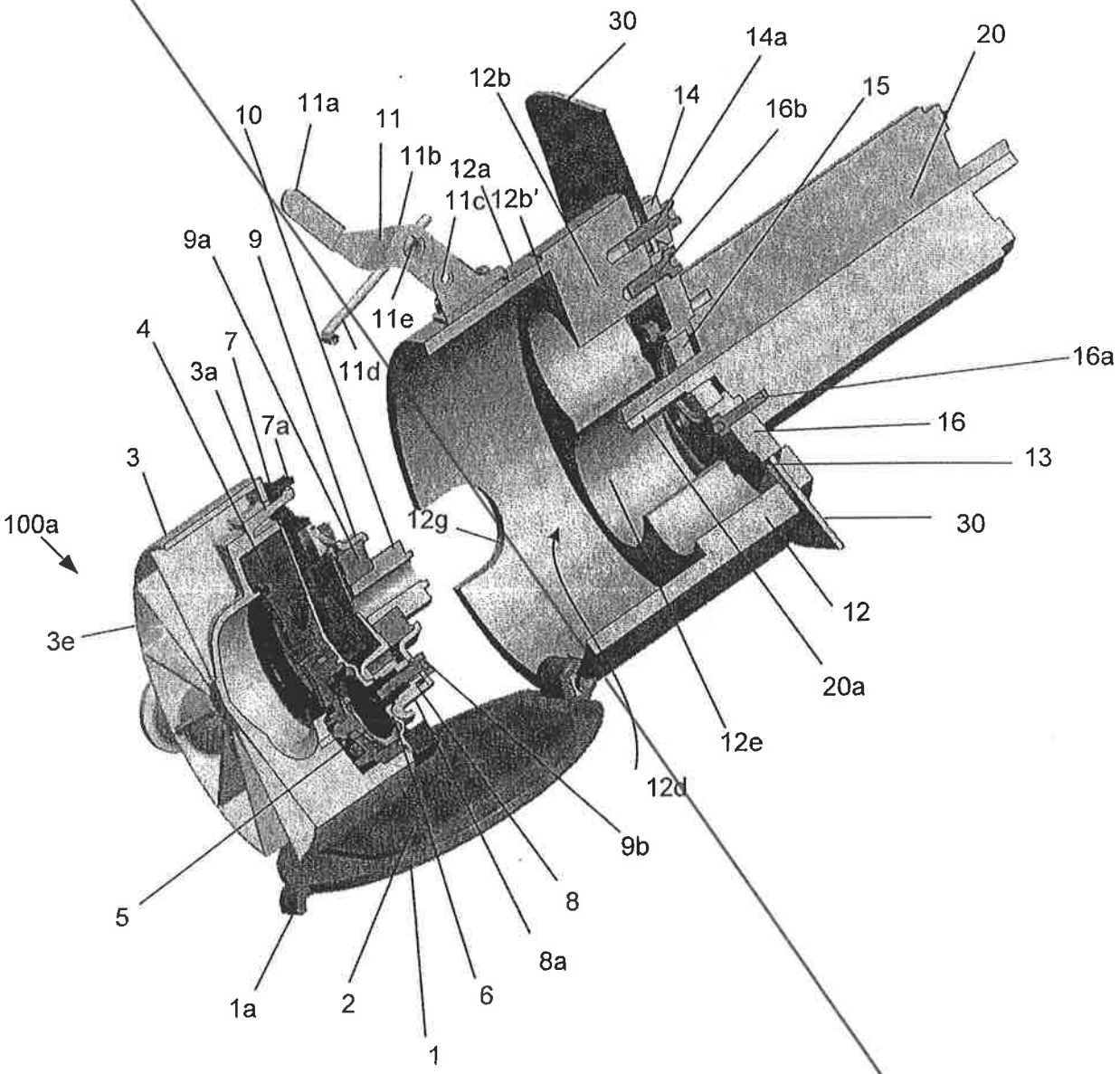
30
14a
20
12b
14
15
10
11a
11
16b
11b
12a
11c
12b'
9a
9
11e
4
7
16a
3a
11d
7a
16
3
13
100a
12g
30
12
3e
20a
12e
12d
9b
5
8
8a
1a
2
6
1

Figure 1b

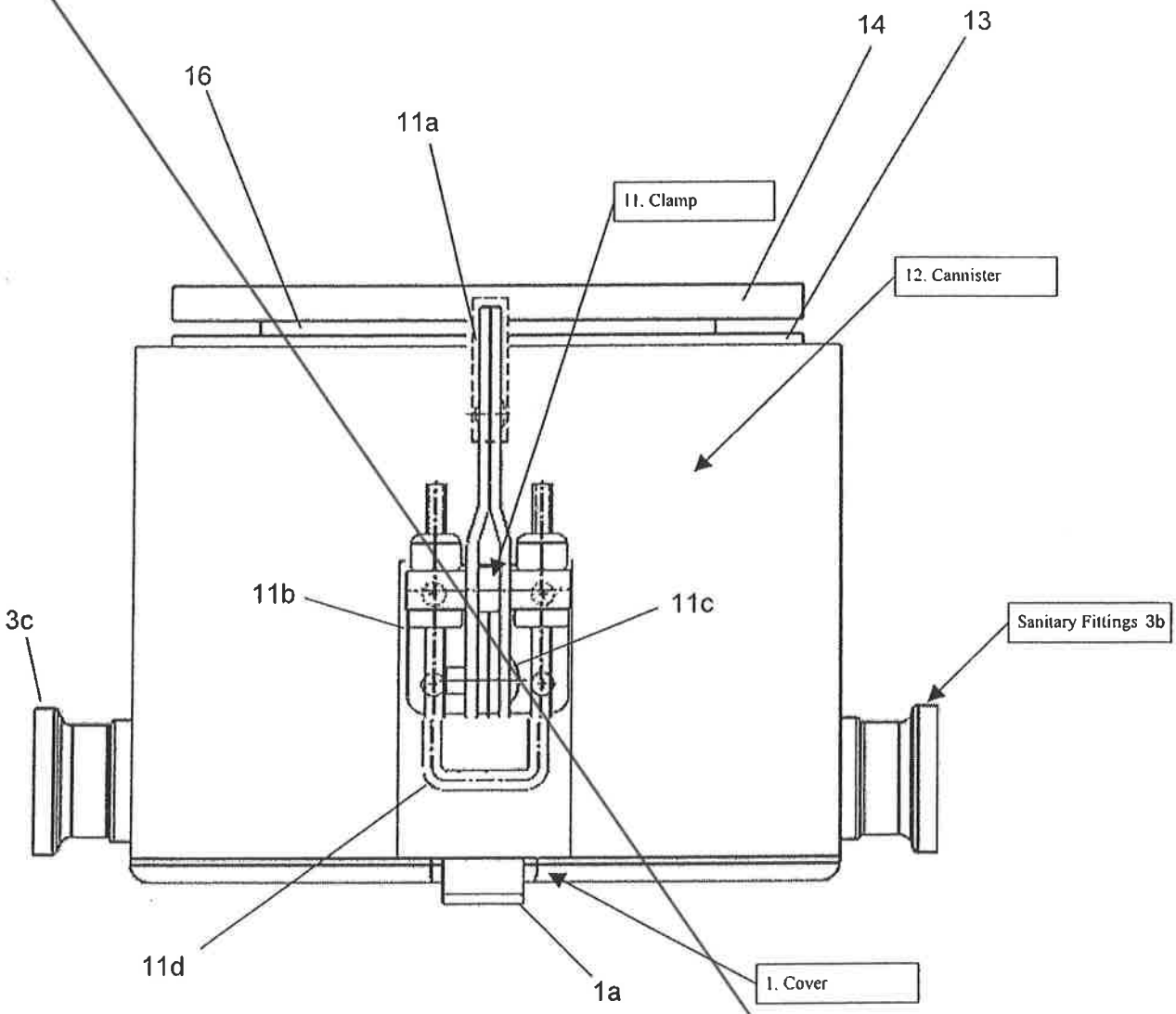
14
13
16
11a
11. Clamp
12. Cannister
11b
11c
3c
Sanitary Fittings 3b
11d
1a
1. Cover

Figure 2

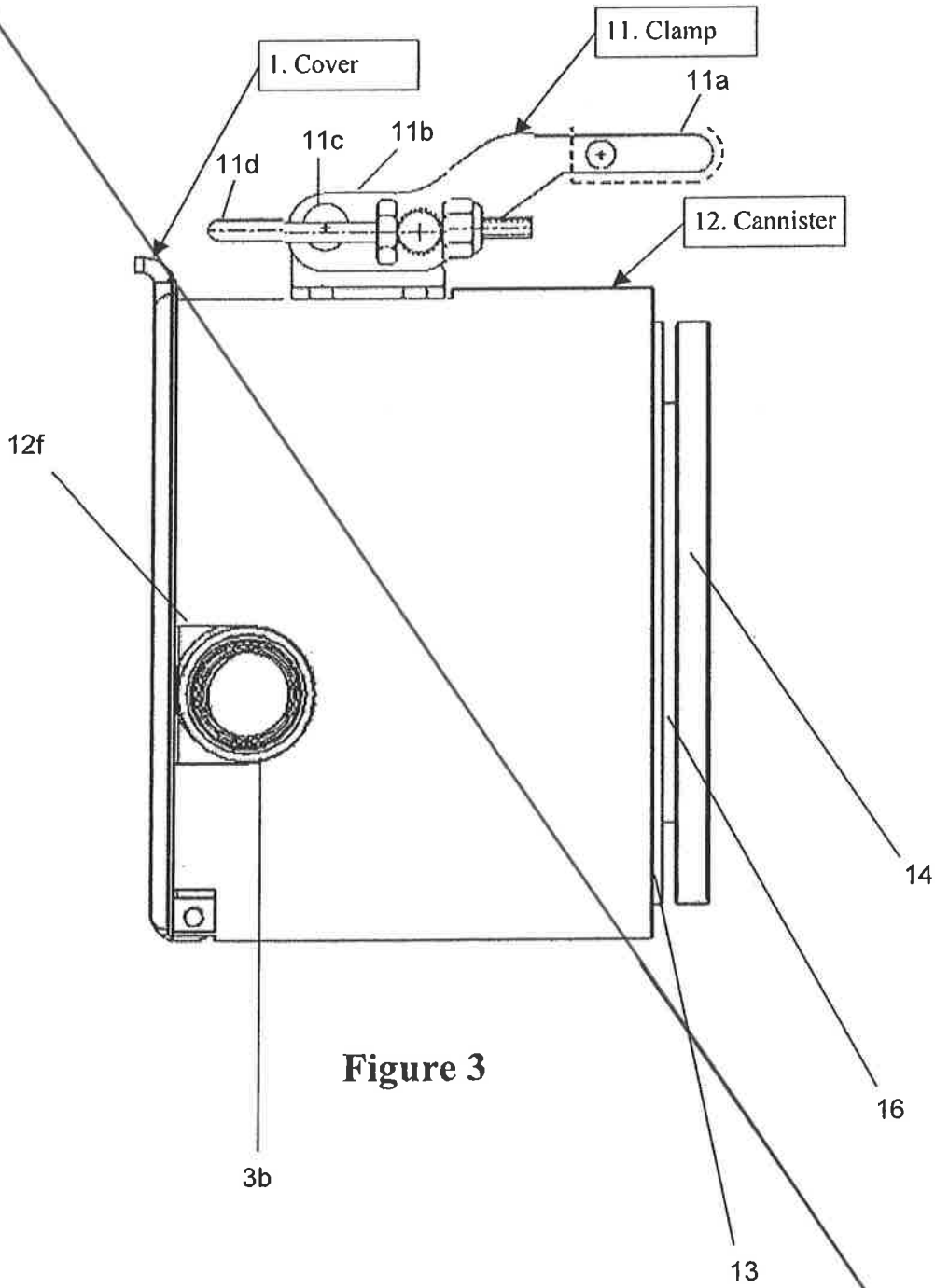

Figure 3

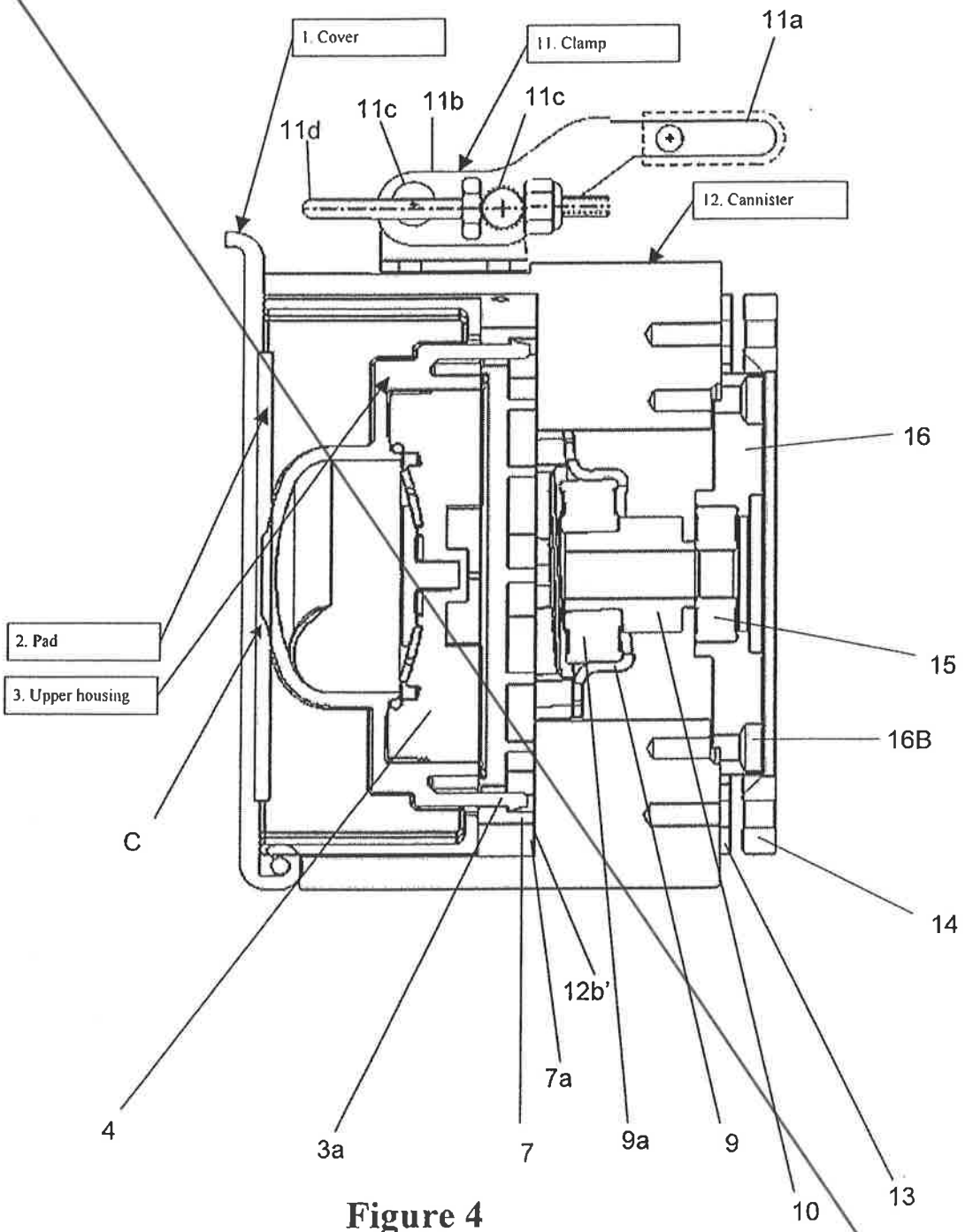
1. Cover
11. Clamp
11a
11c
11b
11c
11d
12. Cannister
16
2. Pad
3. Upper housing
15
16B
C
14
12b'
7a
4
3a
7
9a
9
10
13

Figure 4

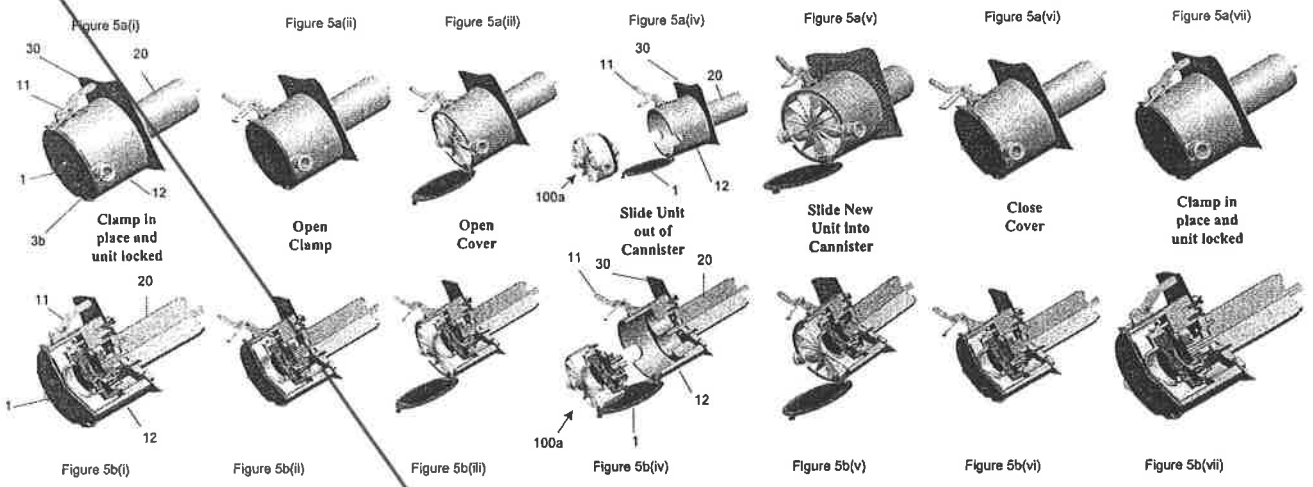
Figure 5a(i)
Figure 5a(ii)
Figure 5a(iii)
Figure 5a(iv)
Figure 5a(v)
Figure 5a(vi)
Figure 5a(vii)
30
20
11
1
12
3b
100a
Clamp in place and unit locked
Open Clamp
Open Cover
Slide Unit out of Cannister
Slide New Unit into Cannister
Close Cover
Clamp in place and unit locked
Figure 5b(i)
Figure 5b(ii)
Figure 5b(iii)
Figure 5b(iv)
Figure 5b(v)
Figure 5b(vi)
Figure 5b(vii)

Figure 5

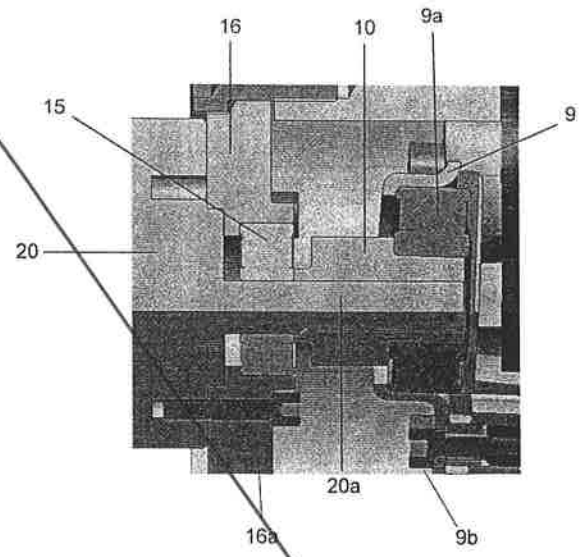

Pump Unit fully seated and engaged to the motor.

Figure 6a

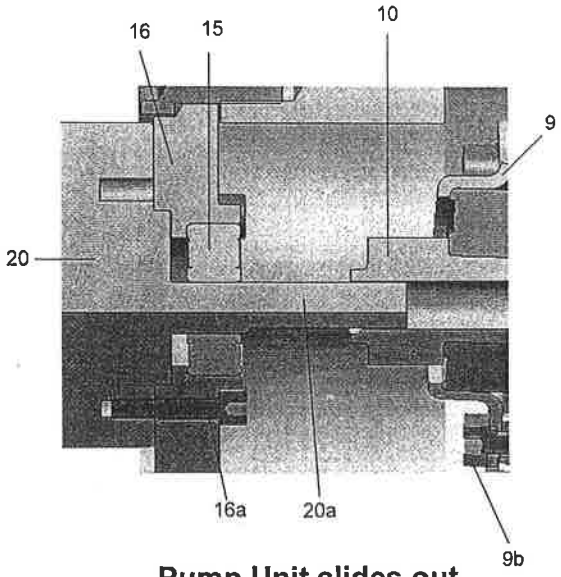

Pump Unit slides out. Unit slides easily in and out. No fastening required.

Figure 6b

Figure 6

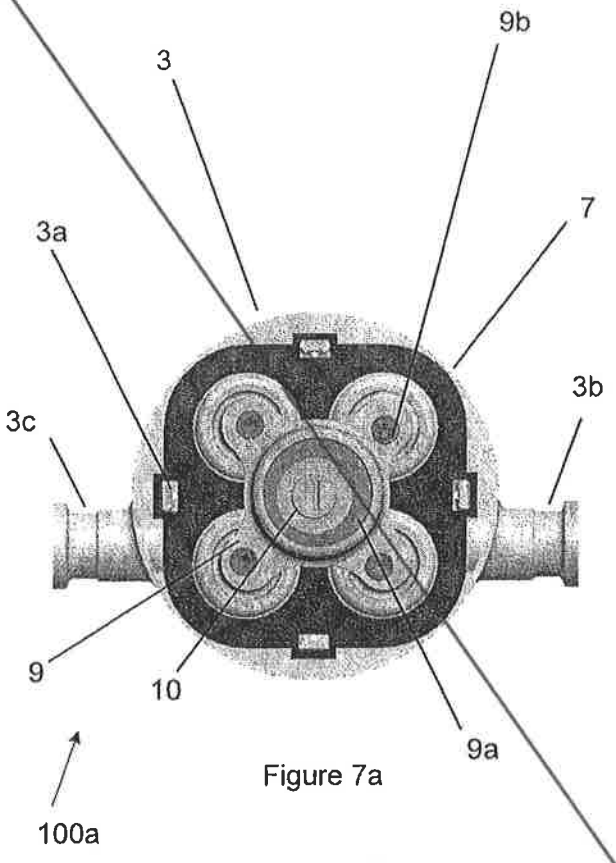

Figure 7a

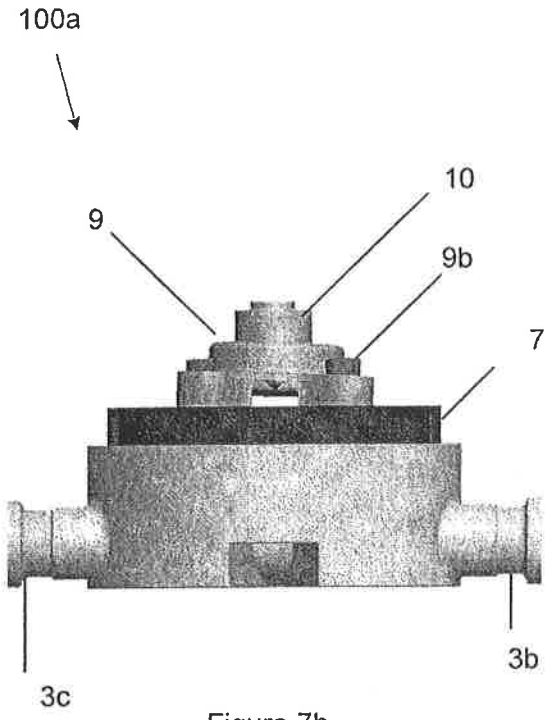

Figure 7b

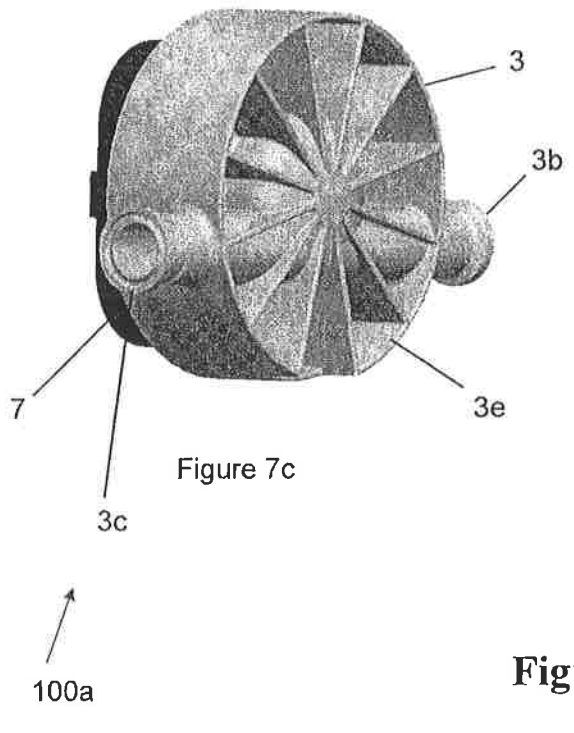

Figure 7c

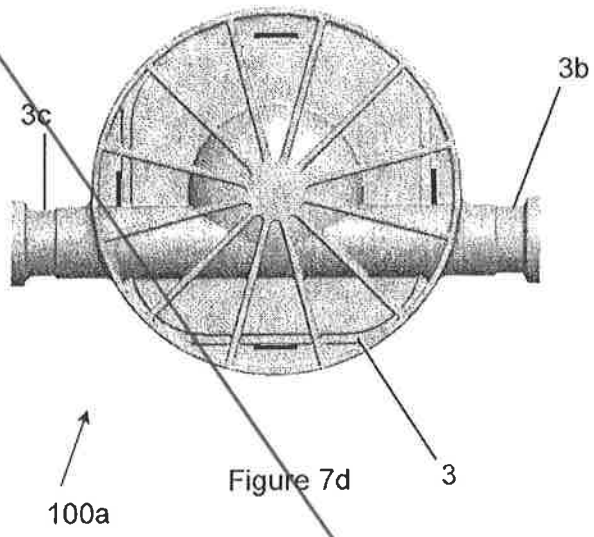

Figure 7d

Figure 7

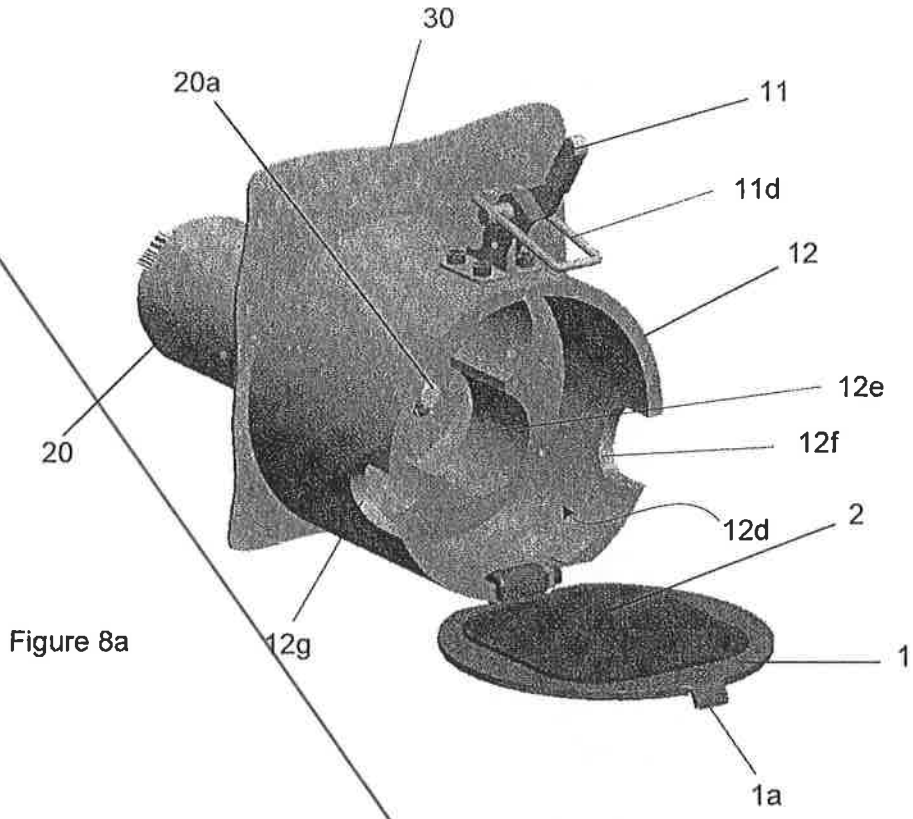

Figure 8a

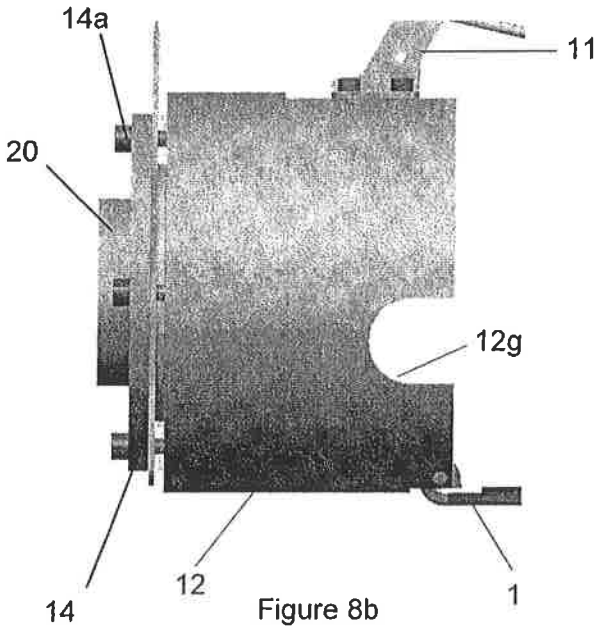

Figure 8b

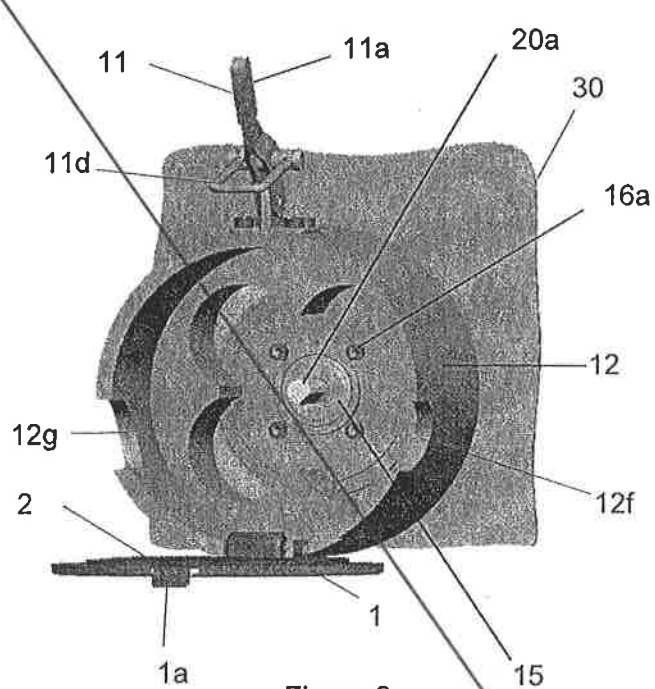

Figure 8c

Figure 8

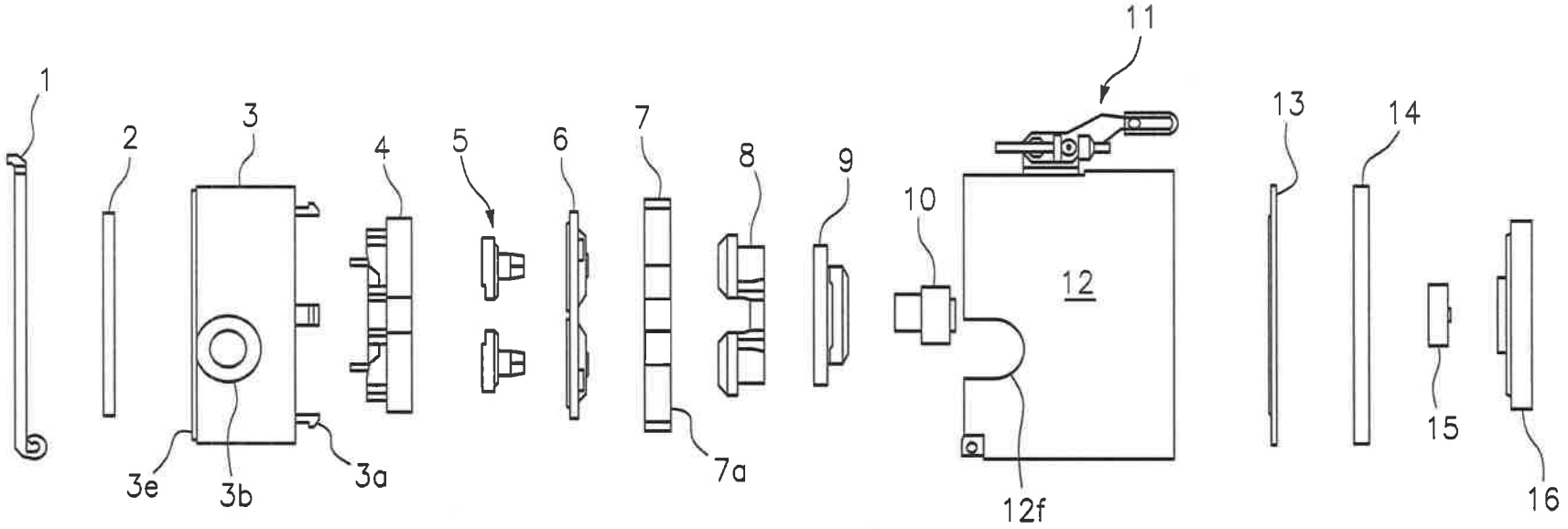

FIG. 1

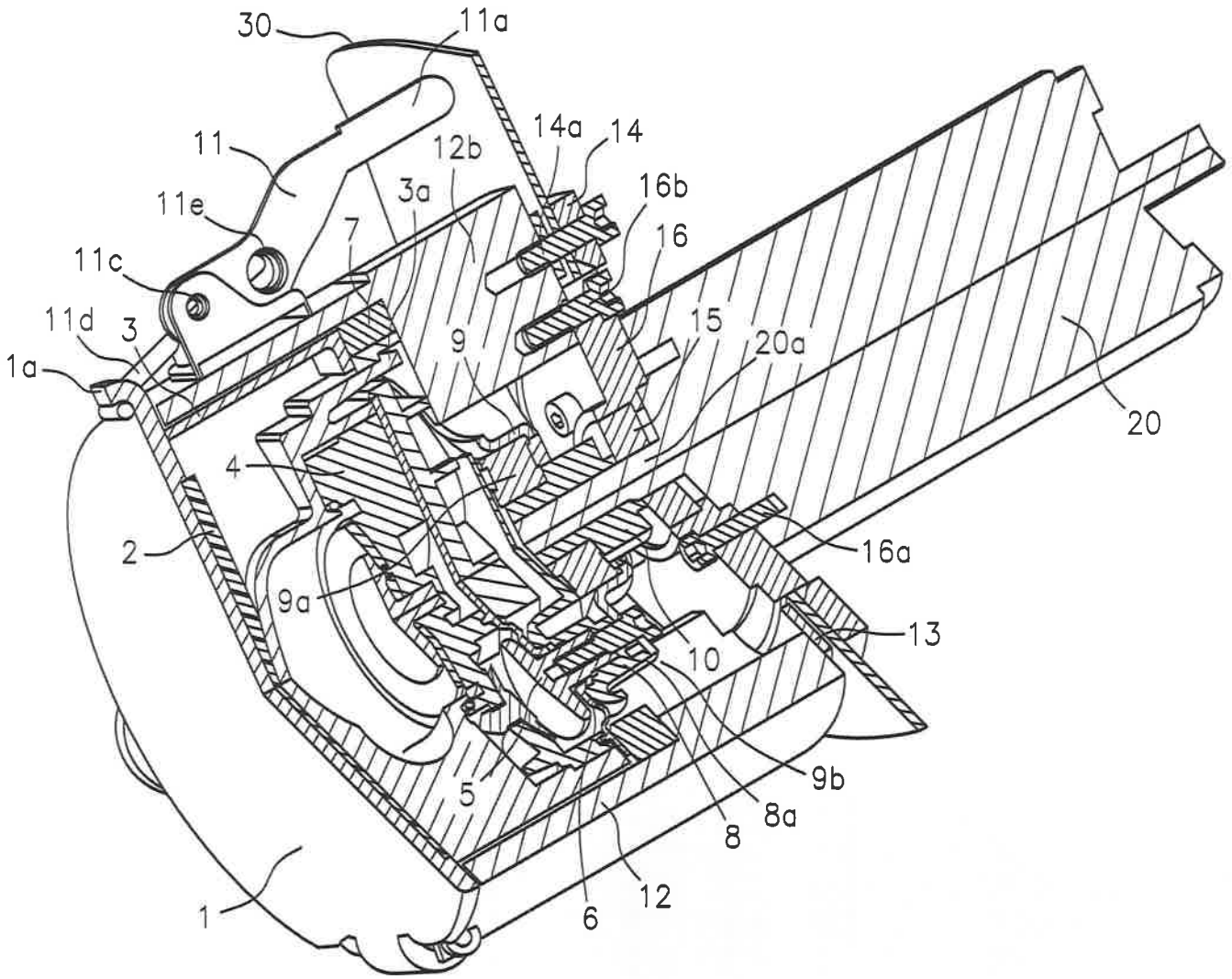
30
11a
11
12b
14a
14
16b
11e
3a
7
16
11c
11d
3
9
15
20a
1a
20
4
2
16a
9a
13
10
9b
5
8a
8
12
1
6

FIG. 1a

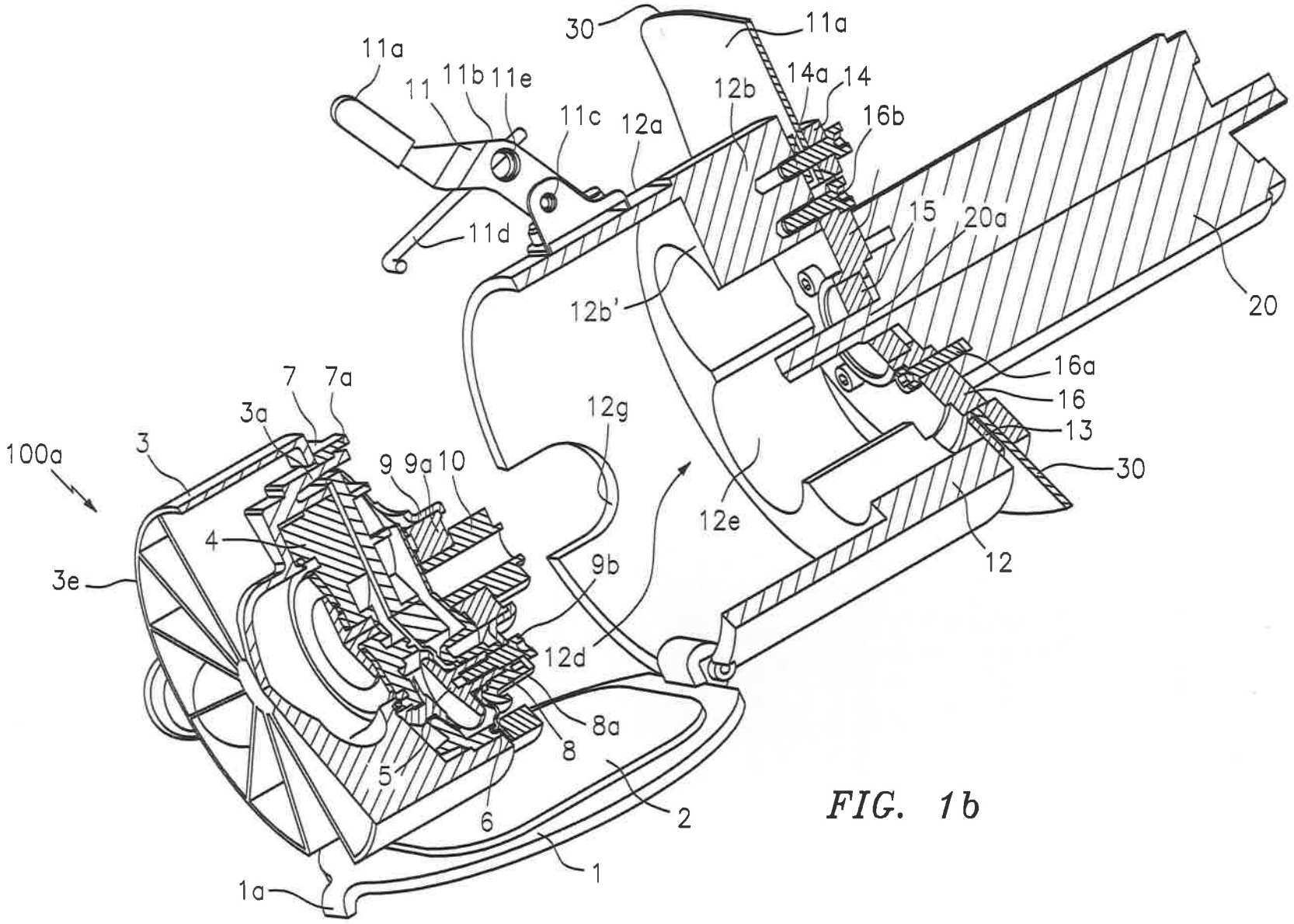
30
11a
11a
11
11b
11e
11c
12a
12b
14a
14
16b
11d
15
20a
20
12b'
16a
16
13
30
7
7a
3a
12g
100a
3
9
9a
10
4
12e
12
3e
9b
12d
8a
8
5
6
2
1
1a

FIG. 1b

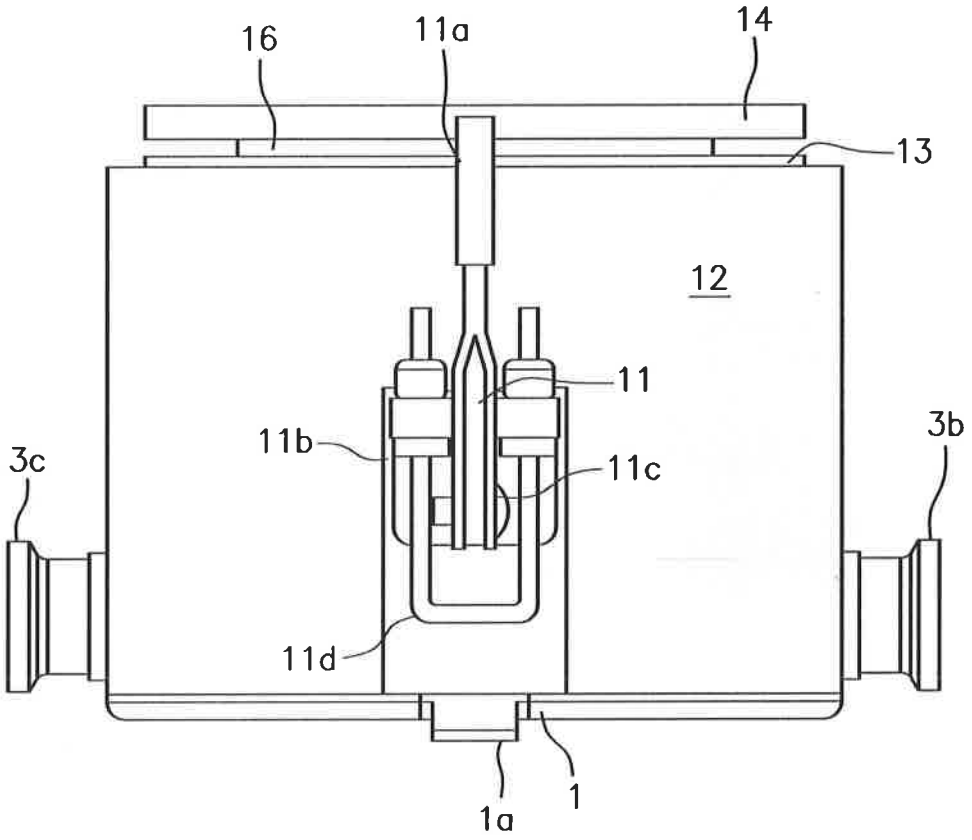

FIG. 2

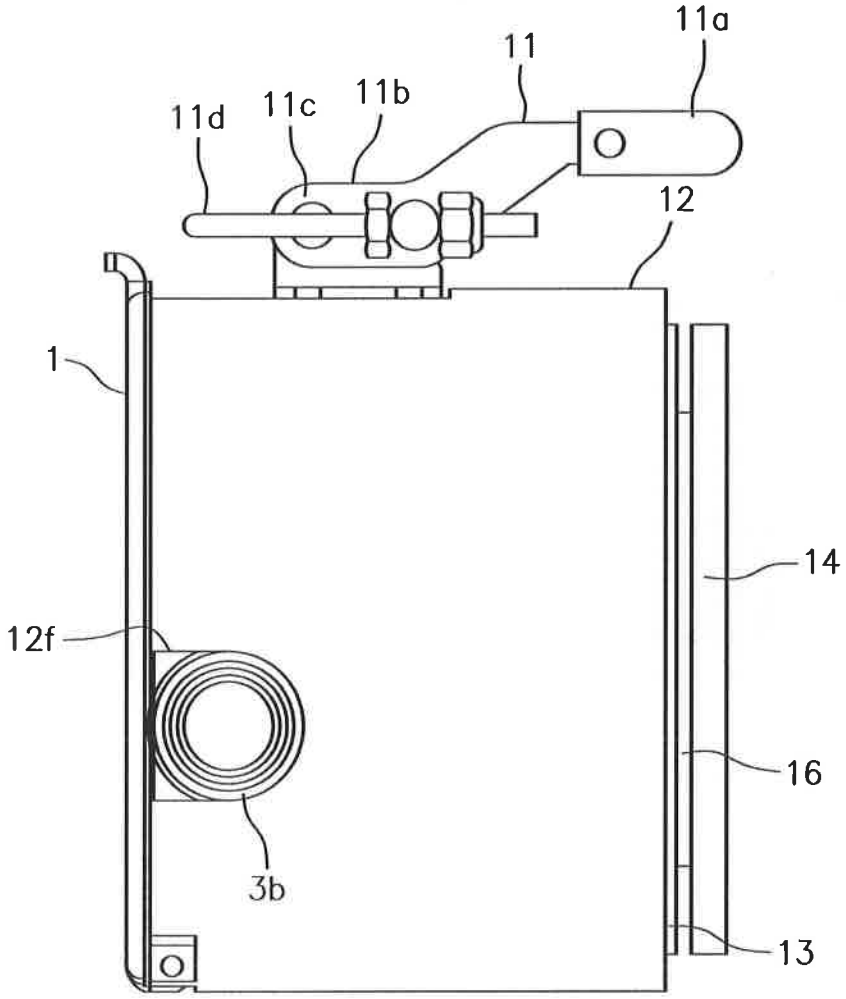

FIG. 3

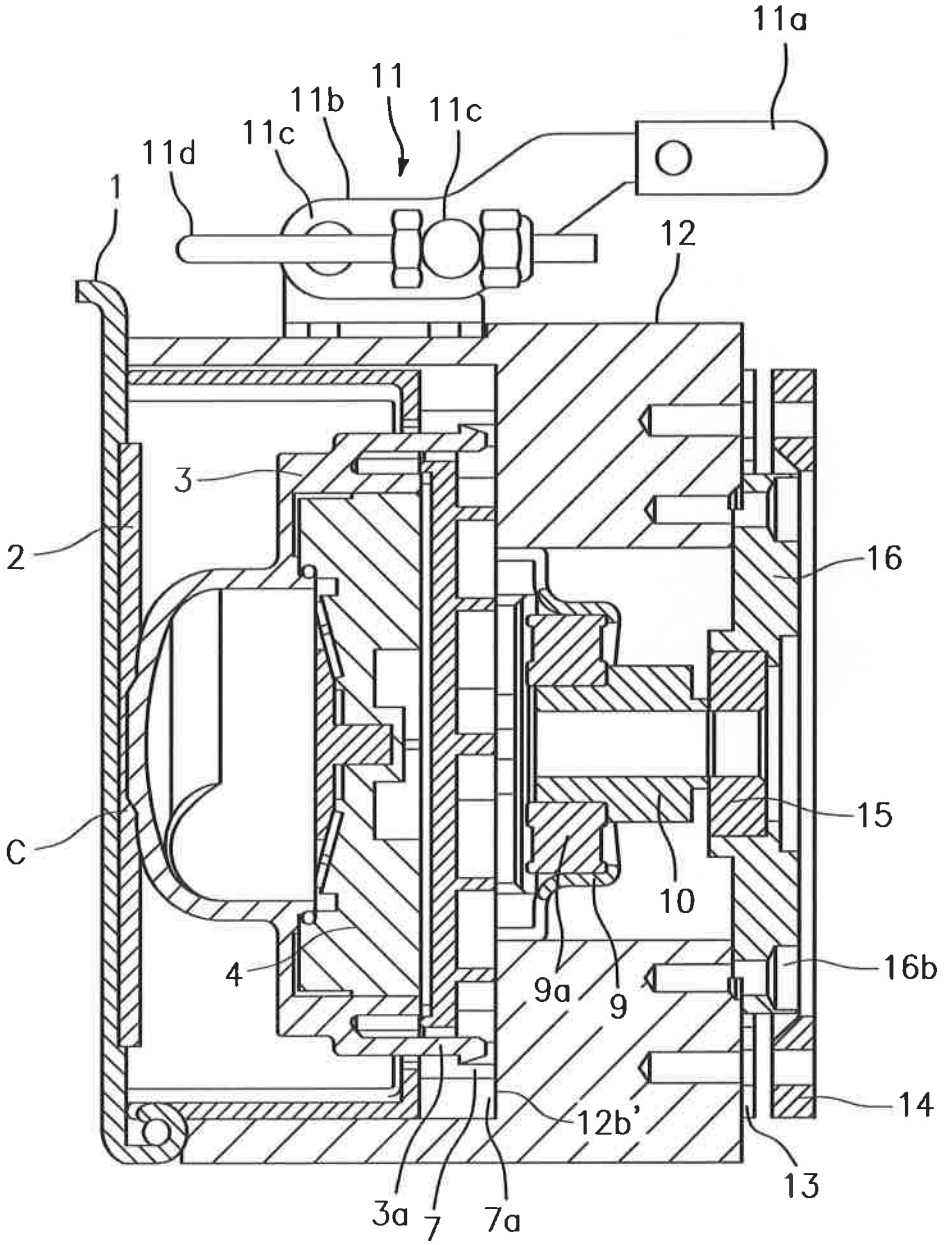

FIG. 4

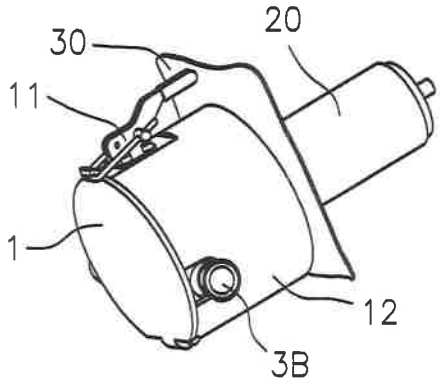

FIG. 5a(i)

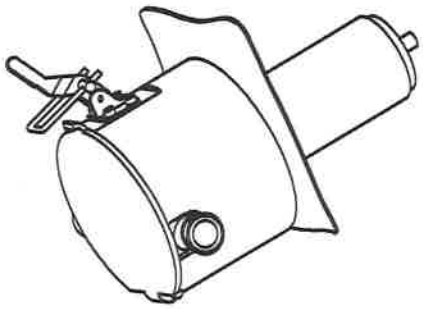

FIG. 5a(ii)

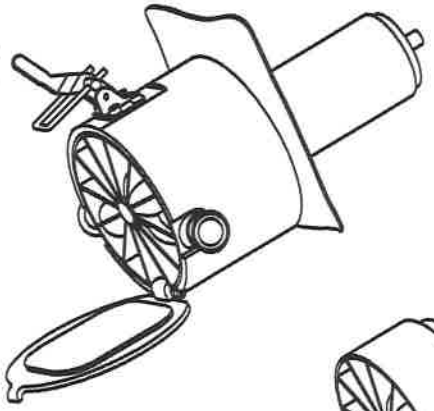

FIG. 5a(iii)

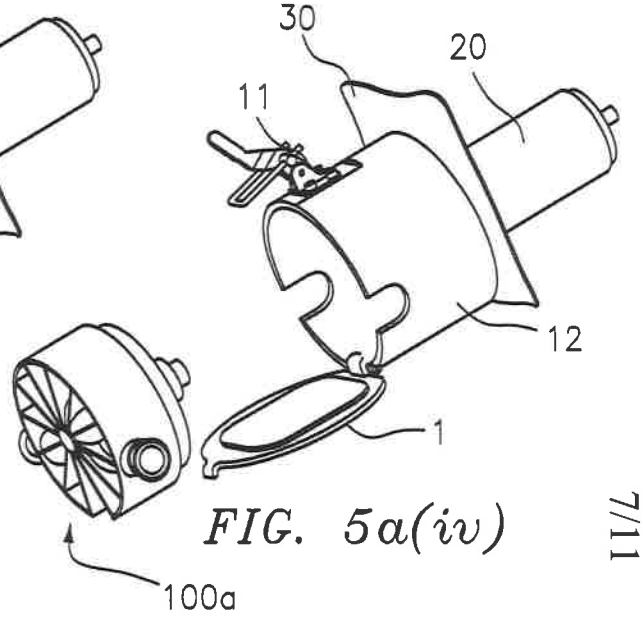

FIG. 5a(iv)

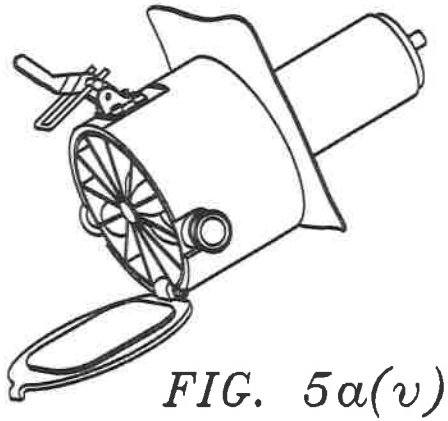

FIG. 5a(v)

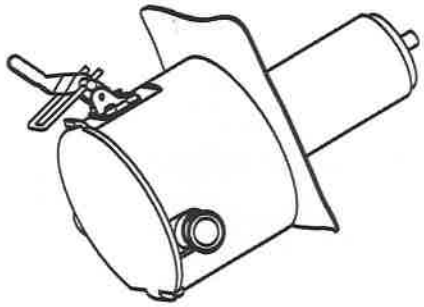

FIG. 5a(vi)

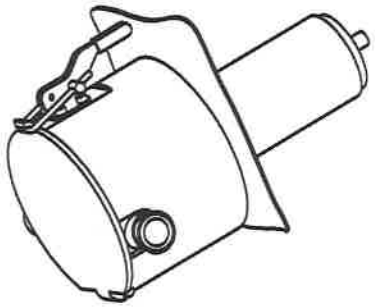

FIG. 5a(vii)

FIG. 5a

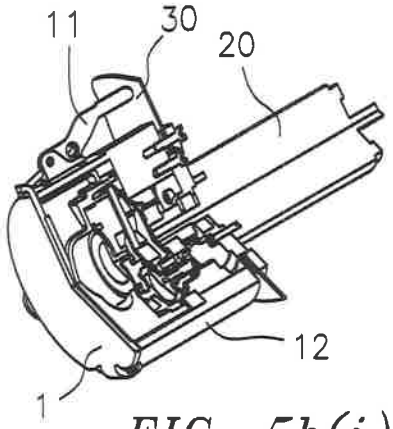

FIG. 5b(i)

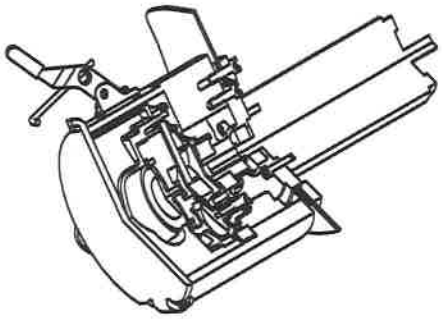

FIG. 5b(ii)

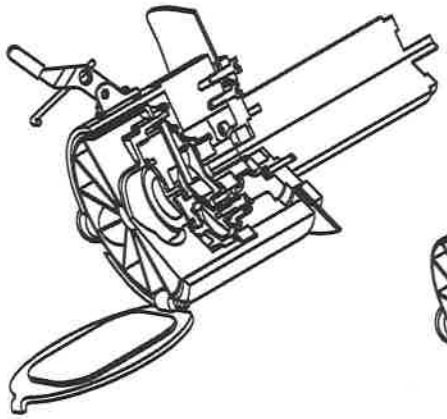

FIG. 5b(iii)

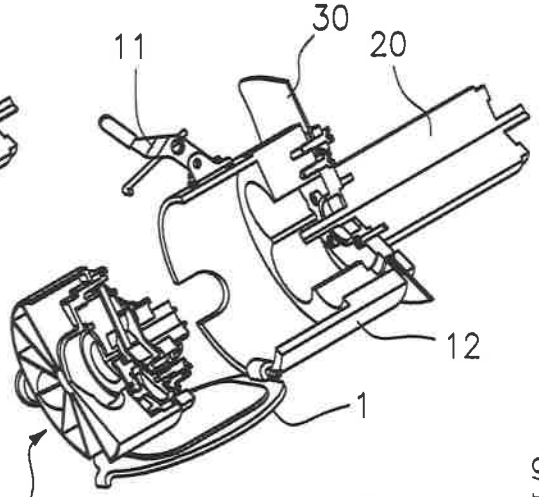

FIG. 5b(iv)

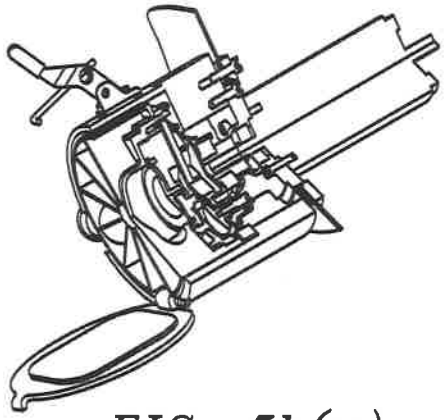

FIG. 5b(v)

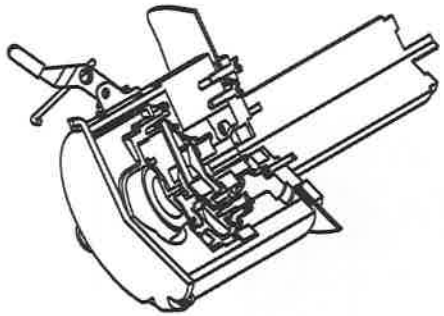

FIG. 5b(vi)

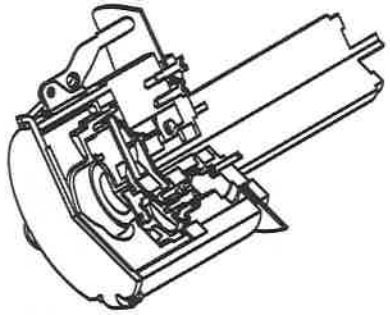

FIG. 5b(vii)

FIG. 5b

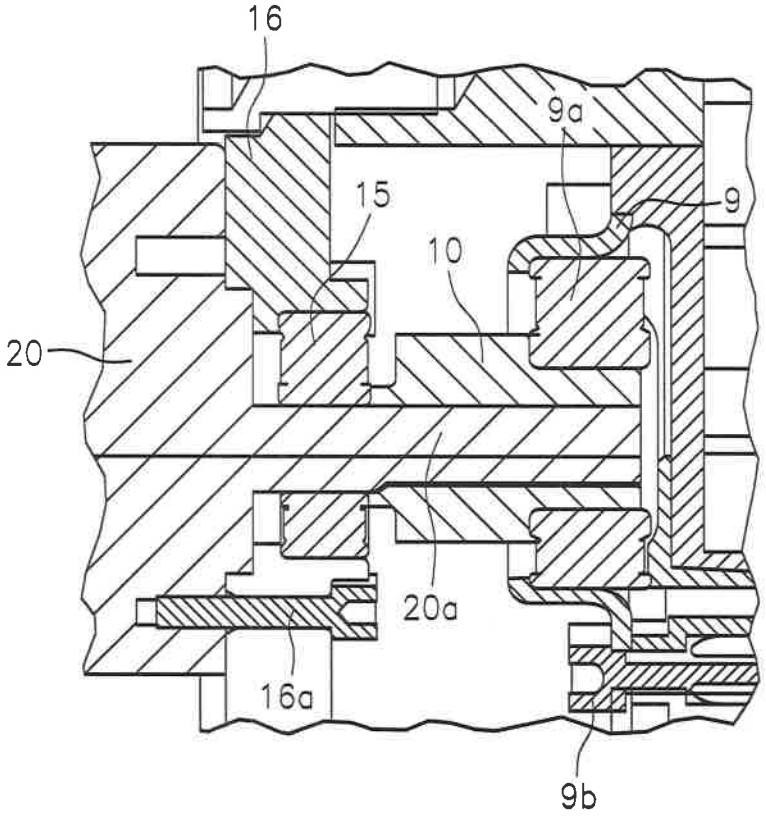

FIG. 6a

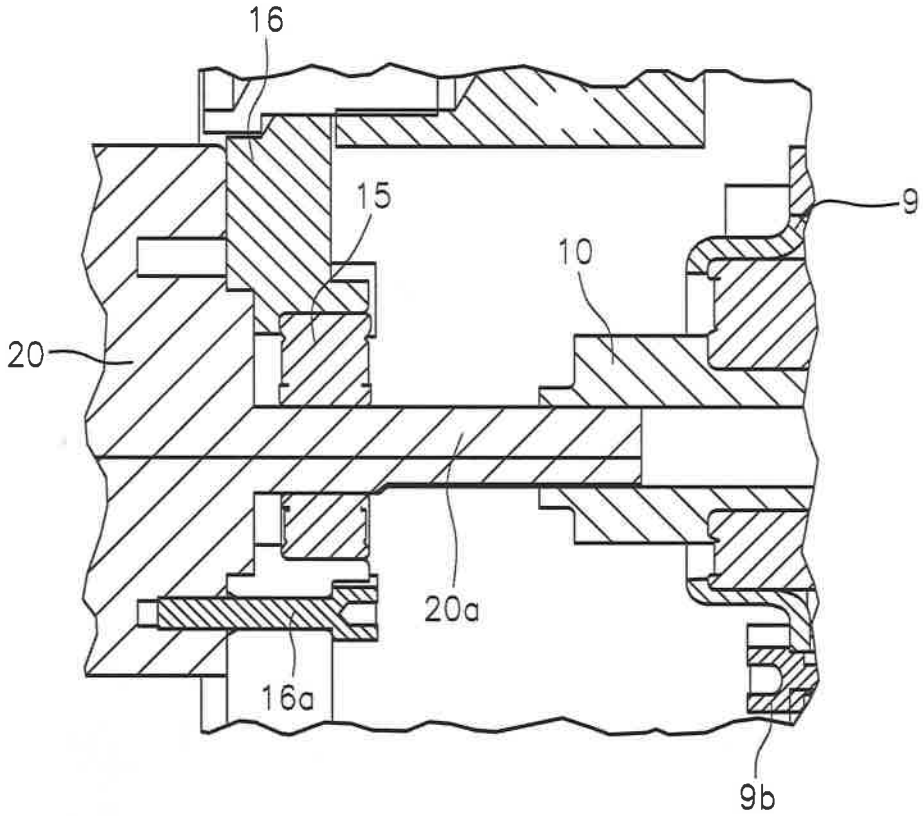

FIG. 6b

FIG. 6

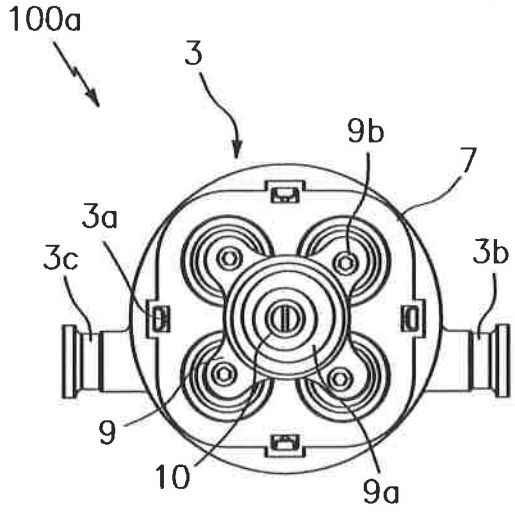

FIG. 7a

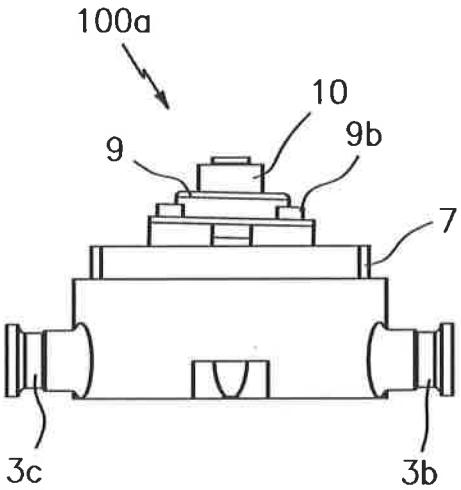

FIG. 7b

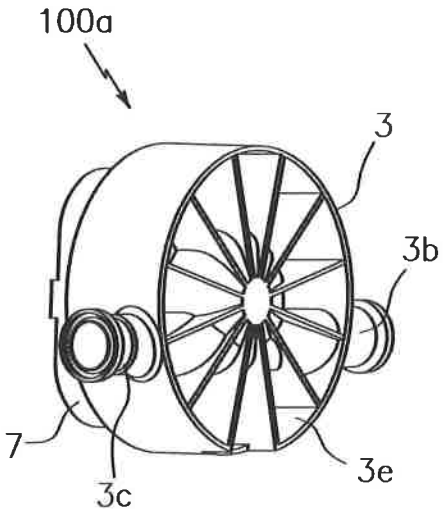

FIG. 7c

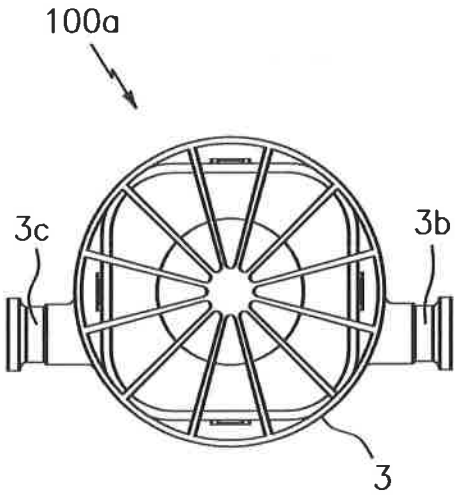

FIG. 7d

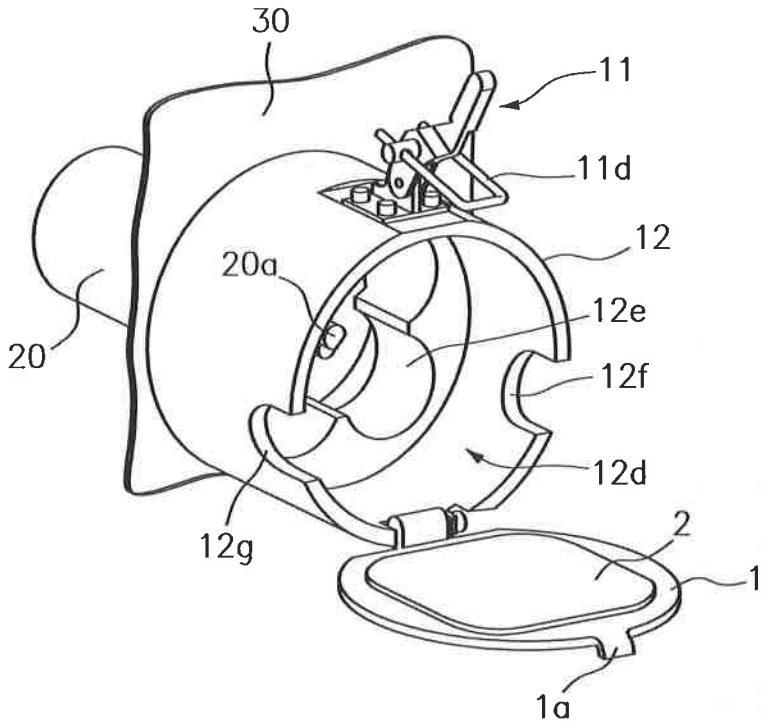

FIG. 8a

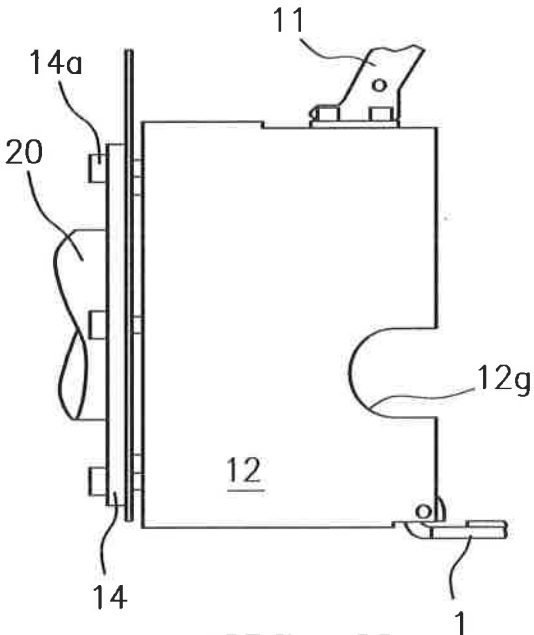

FIG. 8b

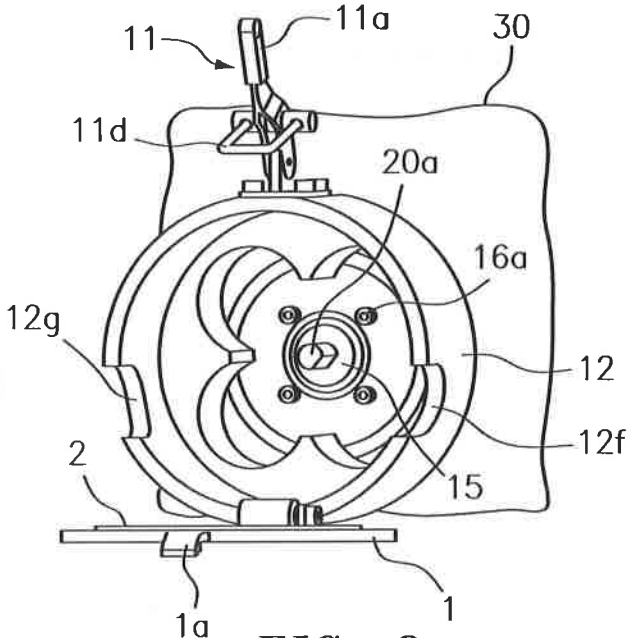

FIG. 8c

FIG. 8