FIG. 1

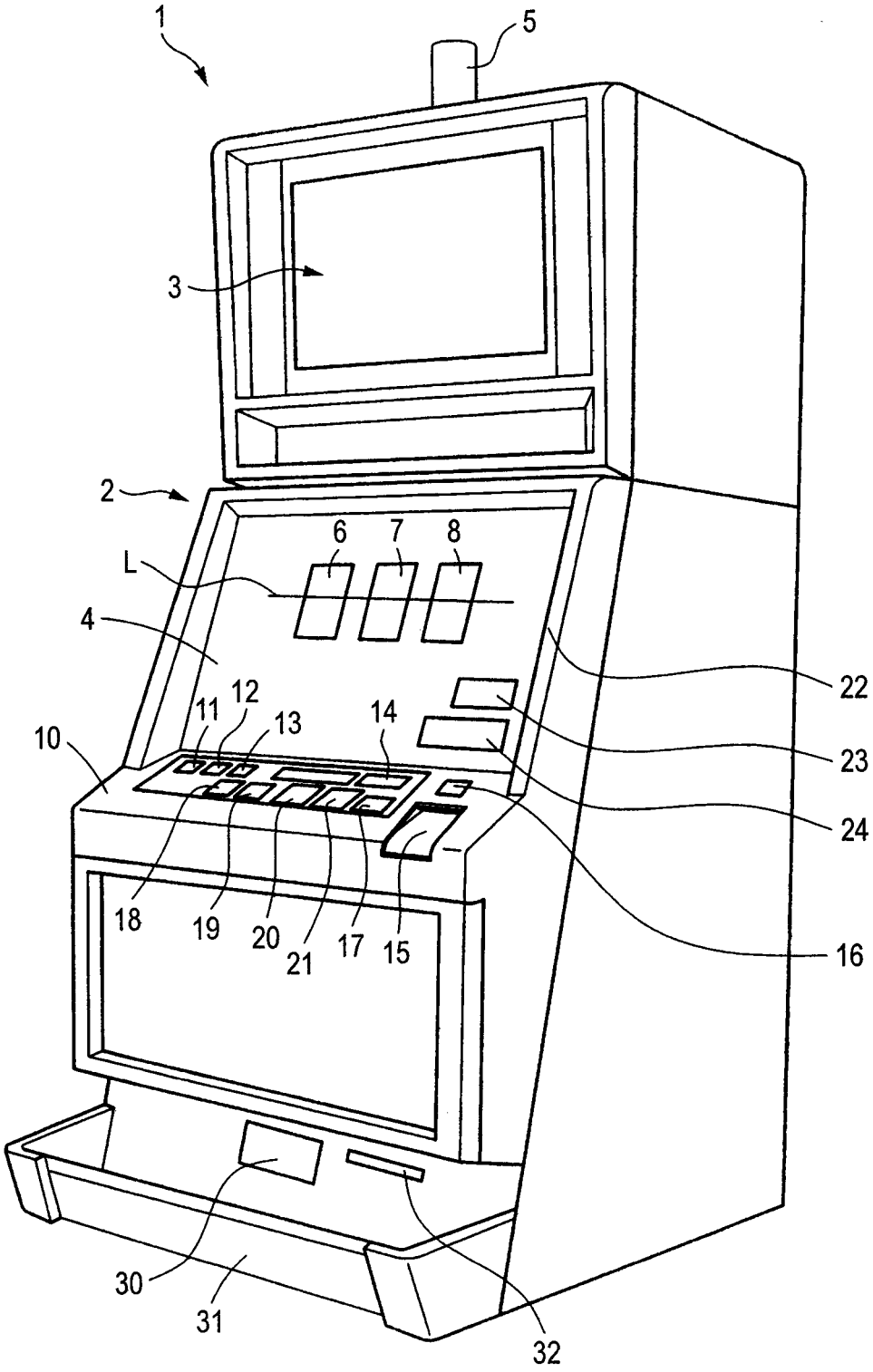

FIG. 2

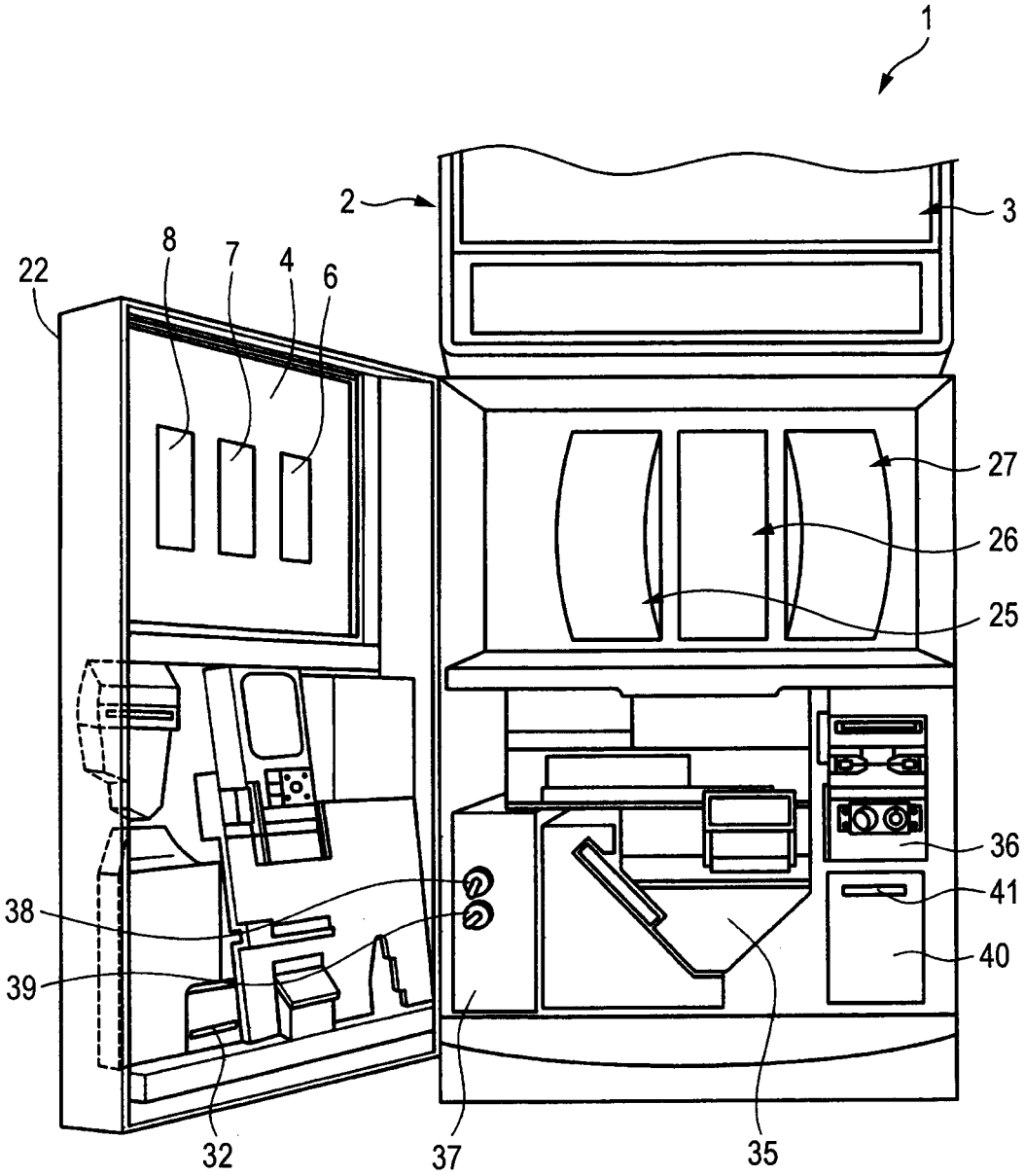

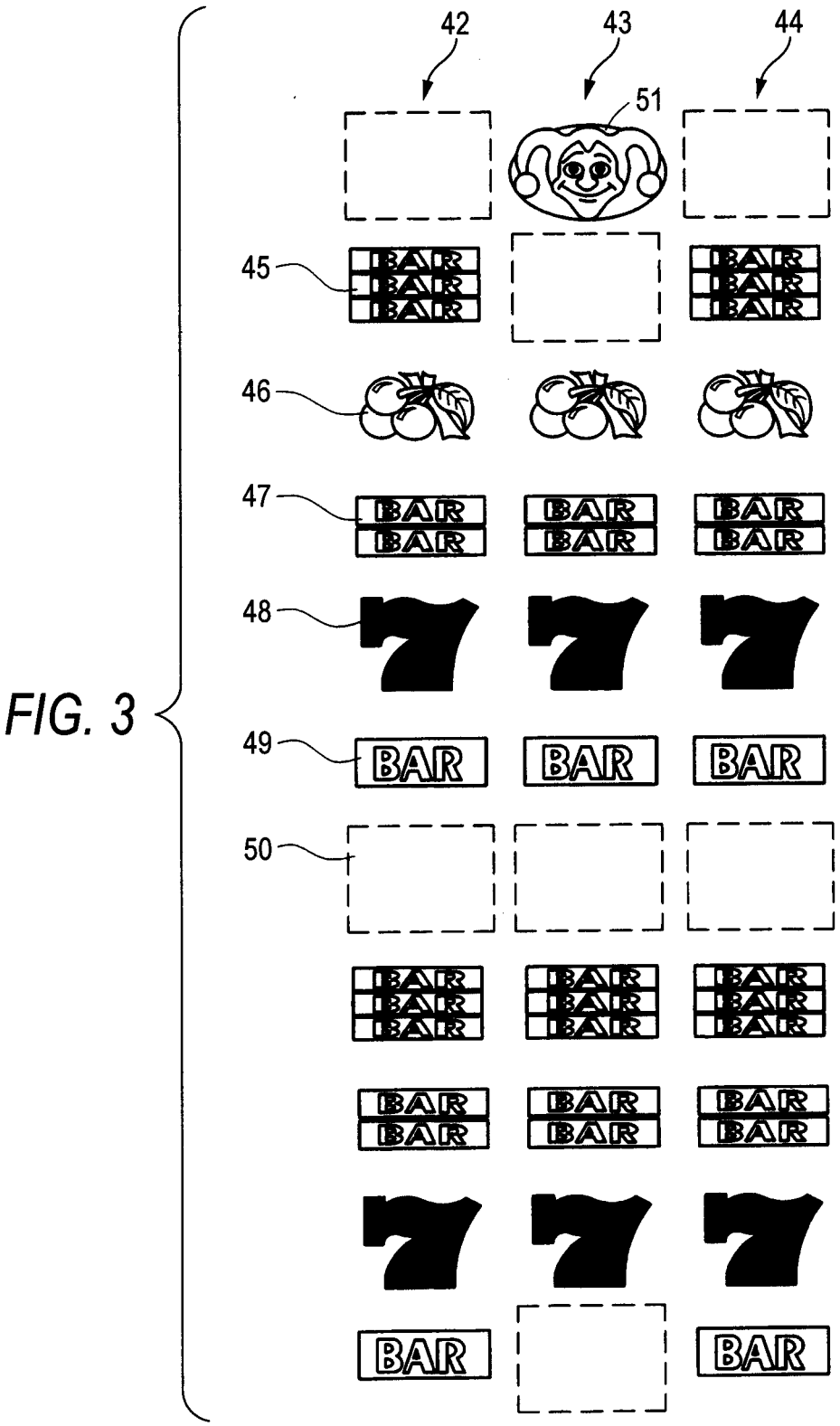

FIG. 3

FIG. 4

55

DESCRIPTION	RANDOM NUMBER RANGE
TRIGGER OF FREE GAME	0-121
7	122-353
3BAR	354-427
2BAR	428-473
1BAR	474-825
CHERRY	826-1025
FAILURE	1026-16383

FIG. 5

56

DESCRIPTION	AWARD
TRIGGER OF FREE GAME	TRANSITION TO FREE GAME (ADDITION OF NUMBER OF FREE GAMES)
7	x 100
3BAR	x 30
2BAR	x 20
1BAR	x 10
CHERRY	x 2
FAILURE	0

FIG. 6

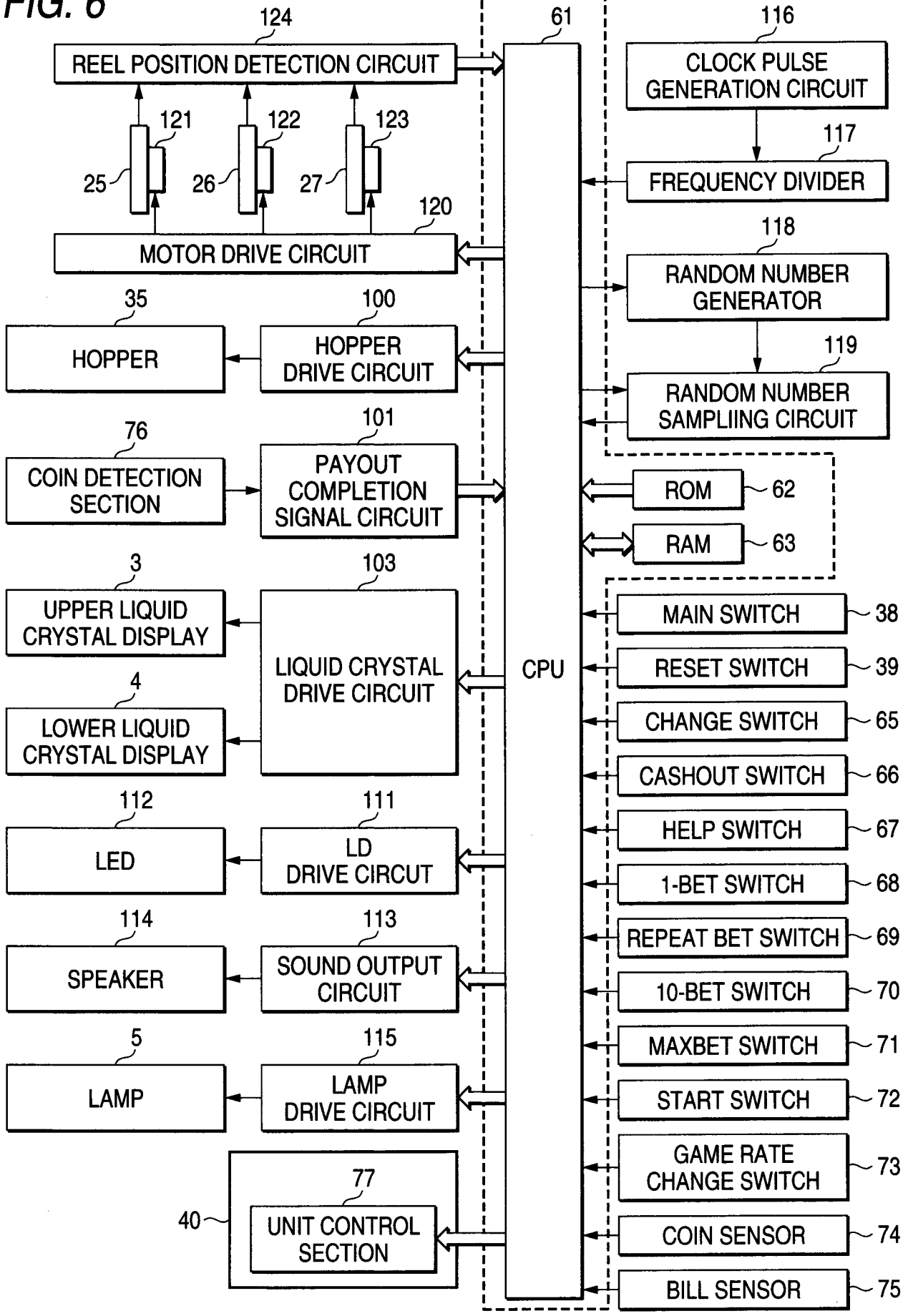
124
REEL POSITION DETECTION CIRCUIT
121
122
123
25
26
27
120
MOTOR DRIVE CIRCUIT
35
HOPPER
100
HOPPER DRIVE CIRCUIT
76
COIN DETECTION SECTION
101
PAYOUT COMPLETION SIGNAL CIRCUIT
3
UPPER LIQUID CRYSTAL DISPLAY
4
LOWER LIQUID CRYSTAL DISPLAY
103
LIQUID CRYSTAL DRIVE CIRCUIT
112
LED
111
LD DRIVE CIRCUT
114
SPEAKER
113
SOUND OUTPUT CIRCUIT
5
LAMP
115
LAMP DRIVE CIRCUIT
77
40
UNIT CONTROL SECTION
61
CPU
116
CLOCK PULSE GENERATION CIRCUIT
117
FREQUENCY DIVIDER
118
RANDOM NUMBER GENERATOR
119
RANDOM NUMBER SAMPLIING CIRCUIT
ROM
62
RAM
63
MAIN SWITCH
38
RESET SWITCH
39
CHANGE SWITCH
65
CASHOUT SWITCH
66
HELP SWITCH
67
1-BET SWITCH
68
REPEAT BET SWITCH
69
10-BET SWITCH
70
MAXBET SWITCH
71
START SWITCH
72
GAME RATE CHANGE SWITCH
73
COIN SENSOR
74
BILL SENSOR
75

FIG. 7

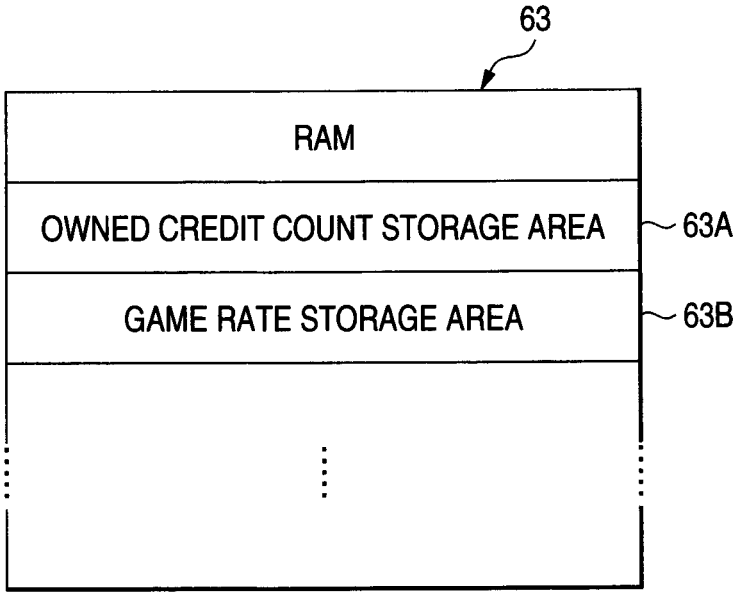
63
RAM
OWNED CREDIT COUNT STORAGE AREA
63A
GAME RATE STORAGE AREA
63B

FIG. 8

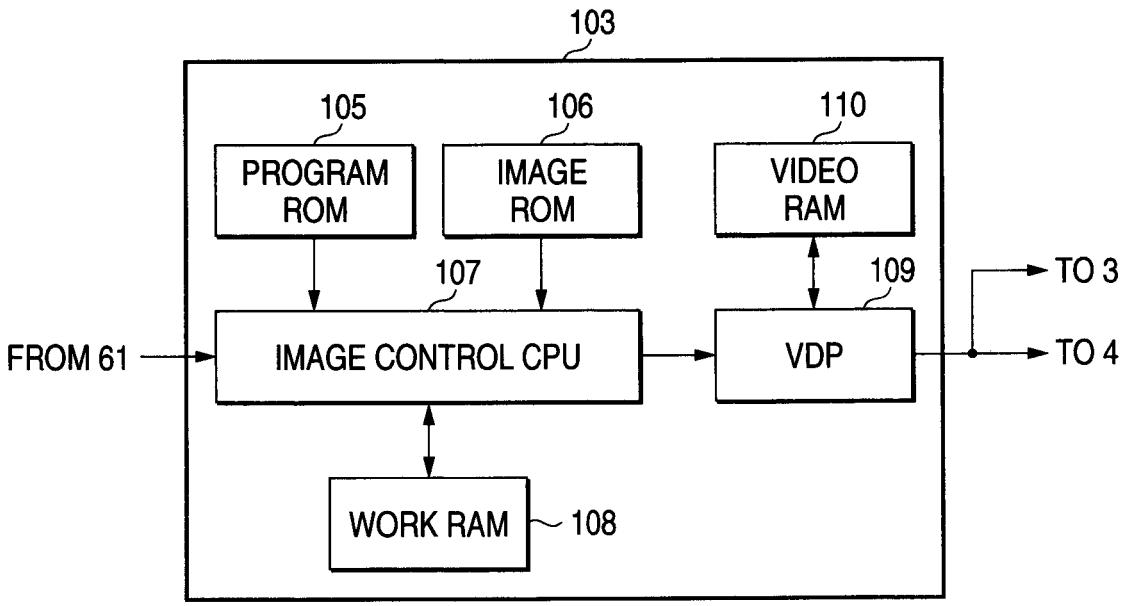
103
105
106
110
PROGRAM ROM
IMAGE ROM
VIDEO RAM
107
109
FROM 61
IMAGE CONTROL CPU
VDP
TO 3
TO 4
WORK RAM
108

FIG. 9

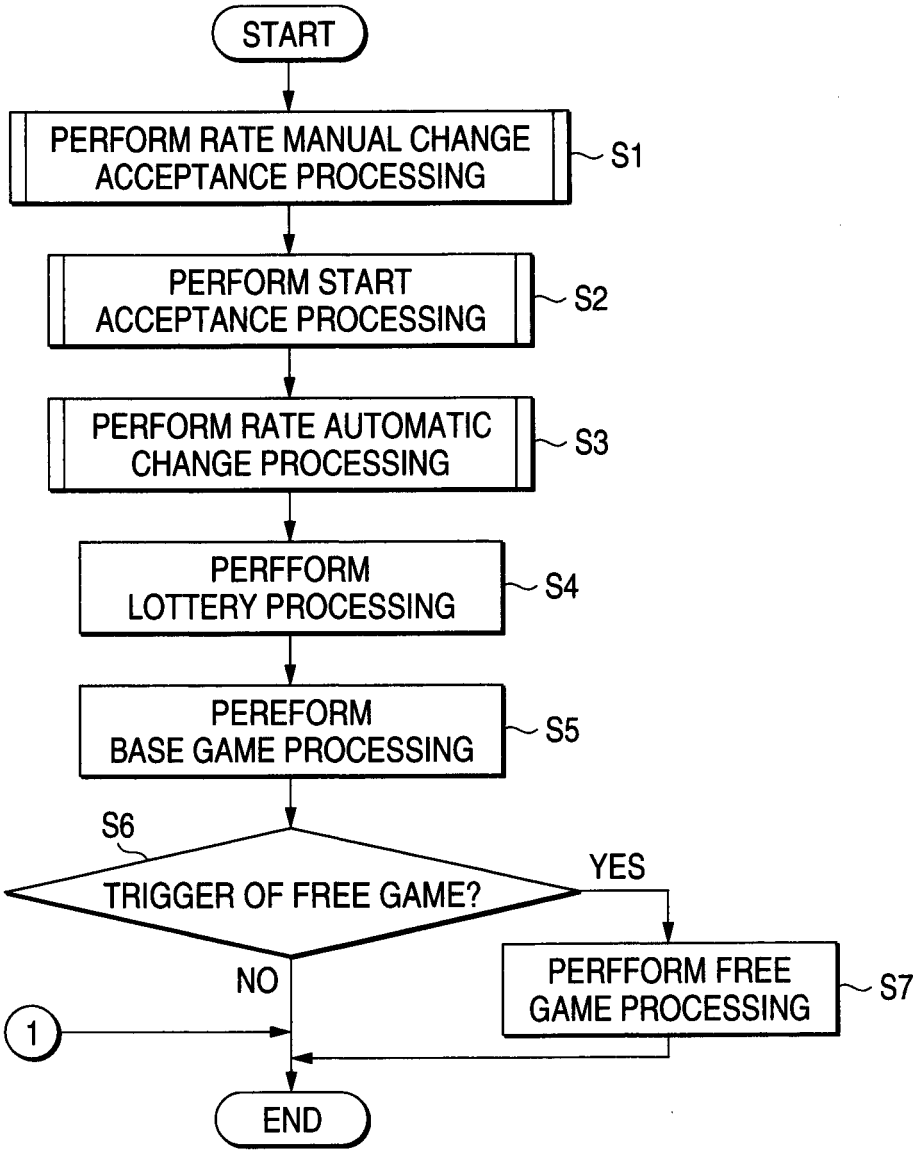
START
PERFORM RATE MANUAL CHANGE ACCEPTANCE PROCESSING
S1
PERFORM START ACCEPTANCE PROCESSING
S2
PERFORM RATE AUTOMATIC CHANGE PROCESSING
S3
PERFFORM LOTTERY PROCESSING
S4
PEREFORM BASE GAME PROCESSING
S5
S6
TRIGGER OF FREE GAME?
YES
NO
PERFFORM FREE GAME PROCESSING
S7
1
END

FIG. 10

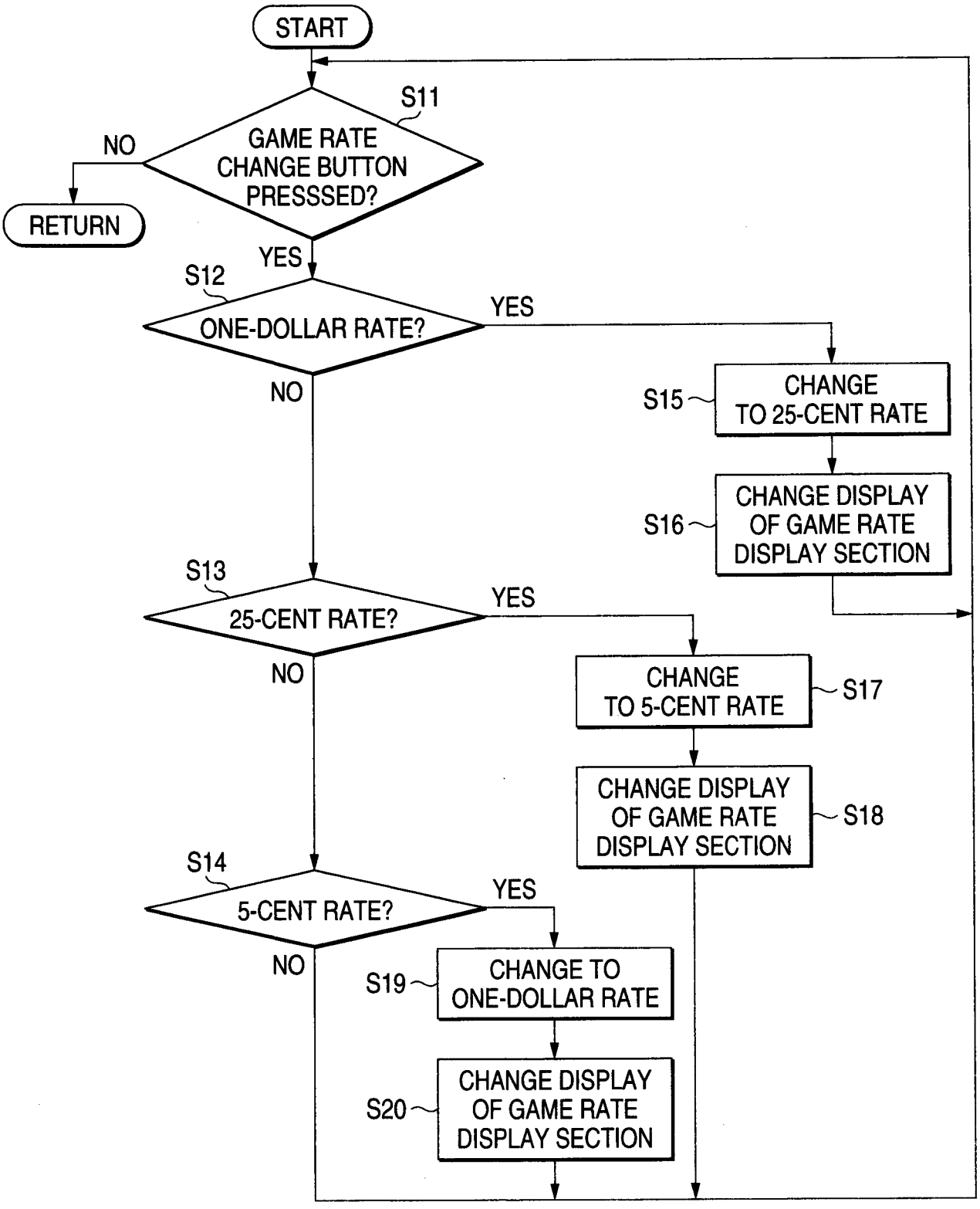
START
S11
GAME RATE CHANGE BUTTON PRESSSED?
NO
RETURN
YES
S12
ONE-DOLLAR RATE?
YES
NO
S15
CHANGE TO 25-CENT RATE
S16
CHANGE DISPLAY OF GAME RATE DISPLAY SECTION
S13
25-CENT RATE?
YES
NO
CHANGE TO 5-CENT RATE
S17
CHANGE DISPLAY OF GAME RATE DISPLAY SECTION
S18
S14
5-CENT RATE?
YES
NO
S19
CHANGE TO ONE-DOLLAR RATE
S20
CHANGE DISPLAY OF GAME RATE DISPLAY SECTION

FIG. 11

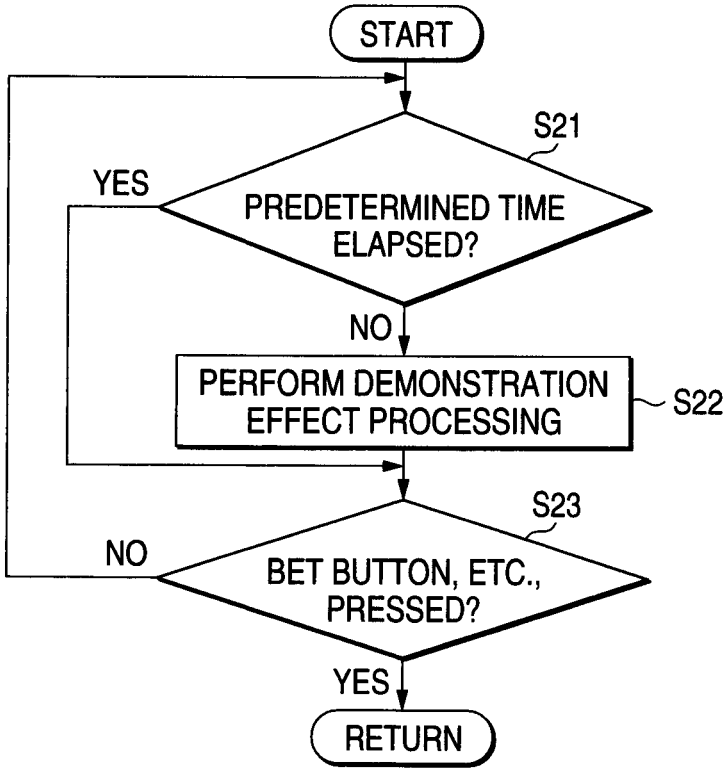
START
S21
YES
PREDETERMINED TIME ELAPSED?
NO
PERFORM DEMONSTRATION EFFECT PROCESSING
S22
S23
NO
BET BUTTON, ETC., PRESSED?
YES
RETURN

FIG. 12

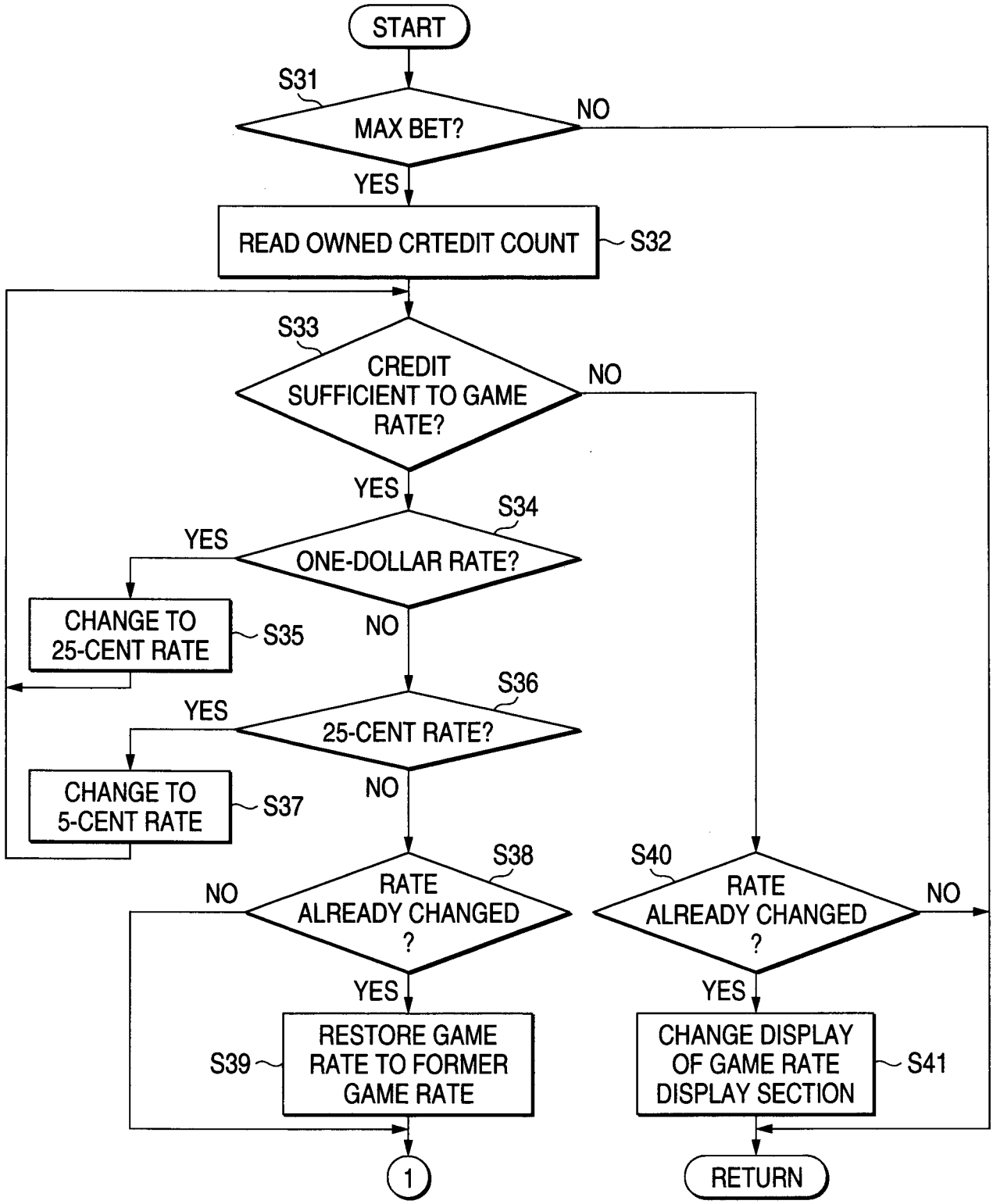
START
S31
MAX BET?
NO
YES
READ OWNED CRTEDIT COUNT
S32
S33
CREDIT SUFFICIENT TO GAME RATE?
NO
YES
S34
YES
ONE-DOLLAR RATE?
CHANGE TO 25-CENT RATE
S35
NO
S36
YES
25-CENT RATE?
CHANGE TO 5-CENT RATE
S37
NO
S38
NO
RATE ALREADY CHANGED ?
YES
S39
RESTORE GAME RATE TO FORMER GAME RATE
1
S40
RATE ALREADY CHANGED ?
NO
YES
CHANGE DISPLAY OF GAME RATE DISPLAY SECTION
S41
RETURN

FIG. 13

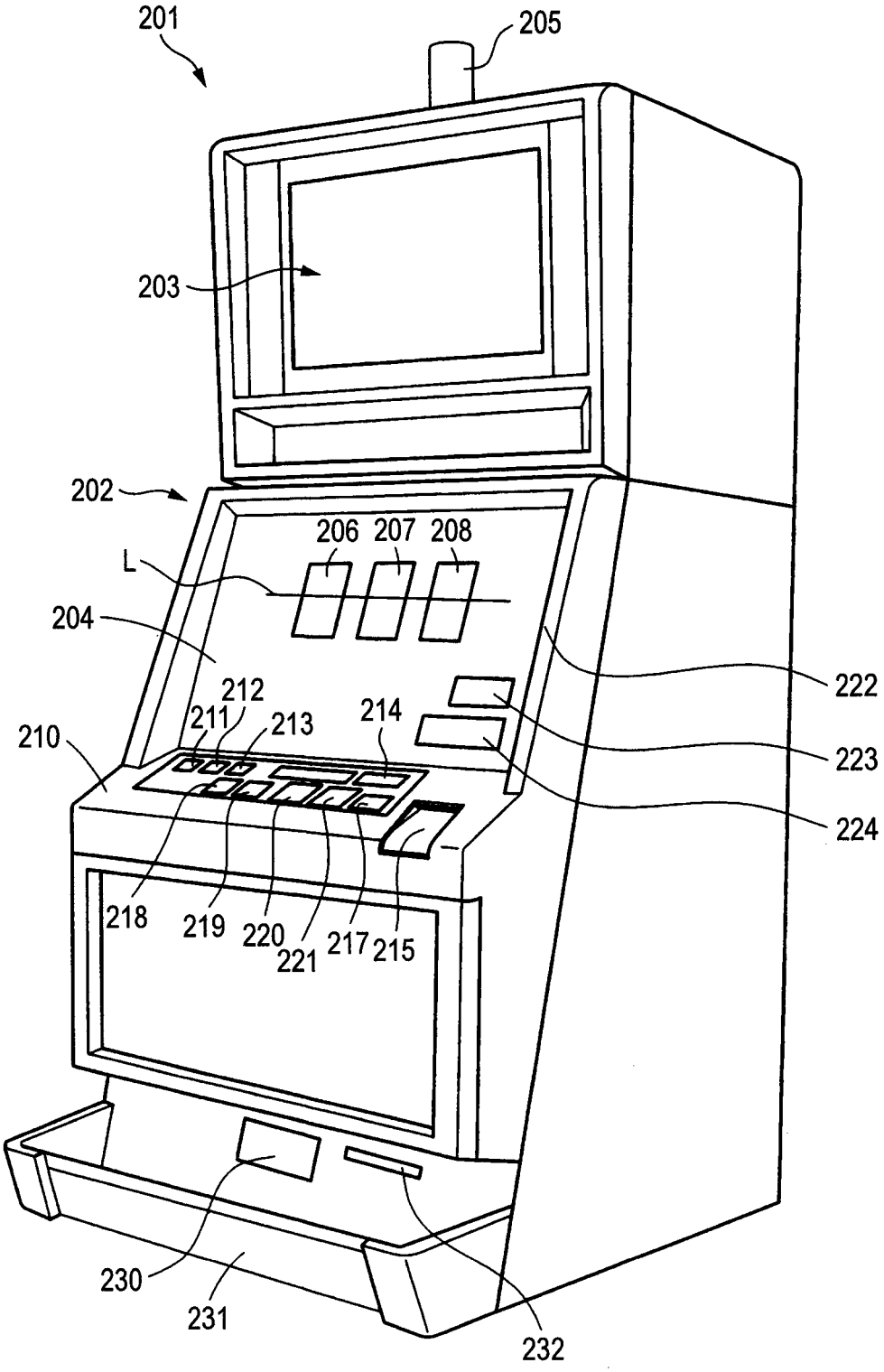
201
205
203
202
206
207
208
L
204
212
211
213
214
210
222
223
224
218
219
220
221
217
215
230
231
232

FIG. 14

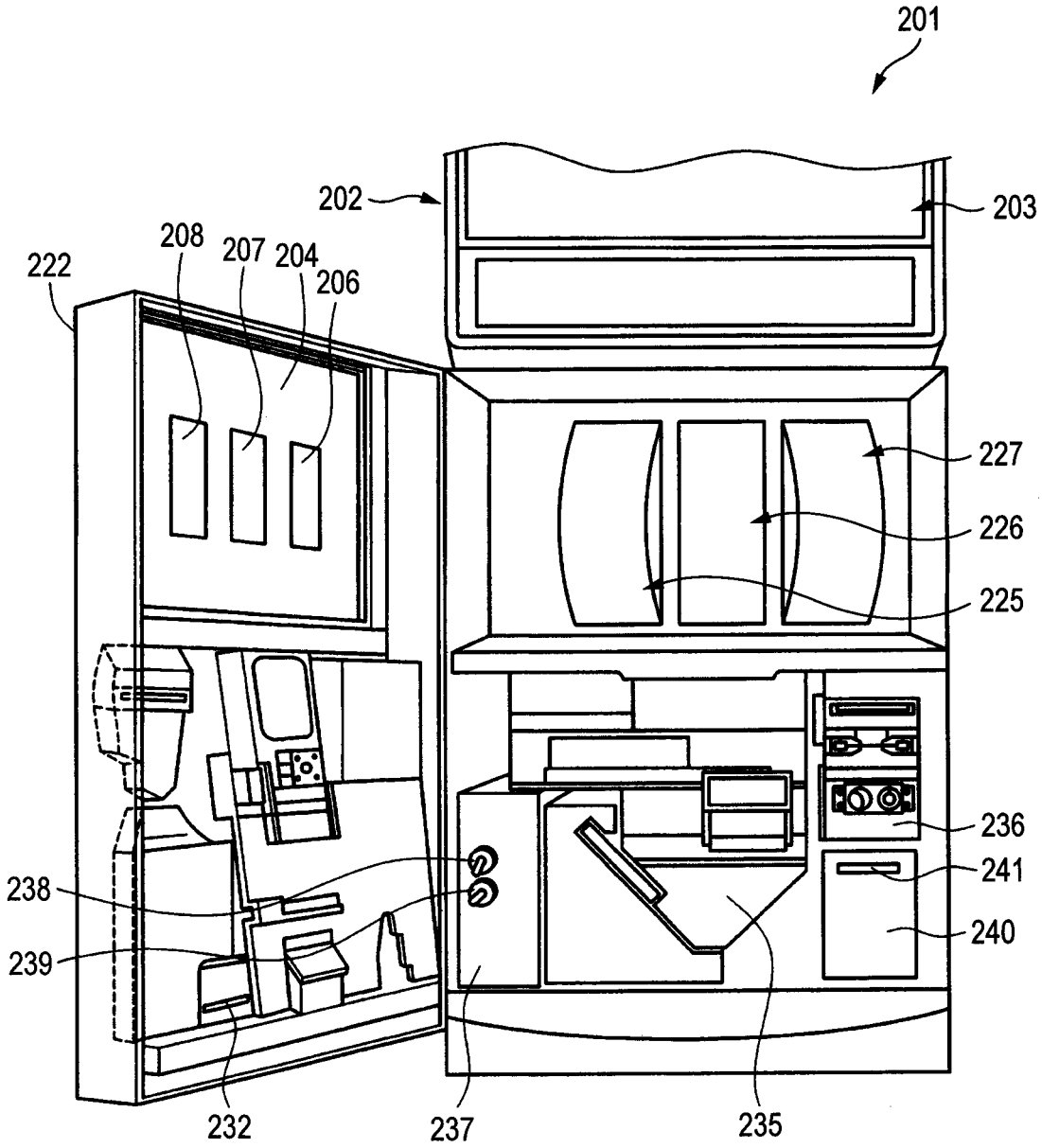
201
202
203
208
207
204
206
222
227
226
225
236
241
240
238
239
232
237
235

FIG. 15

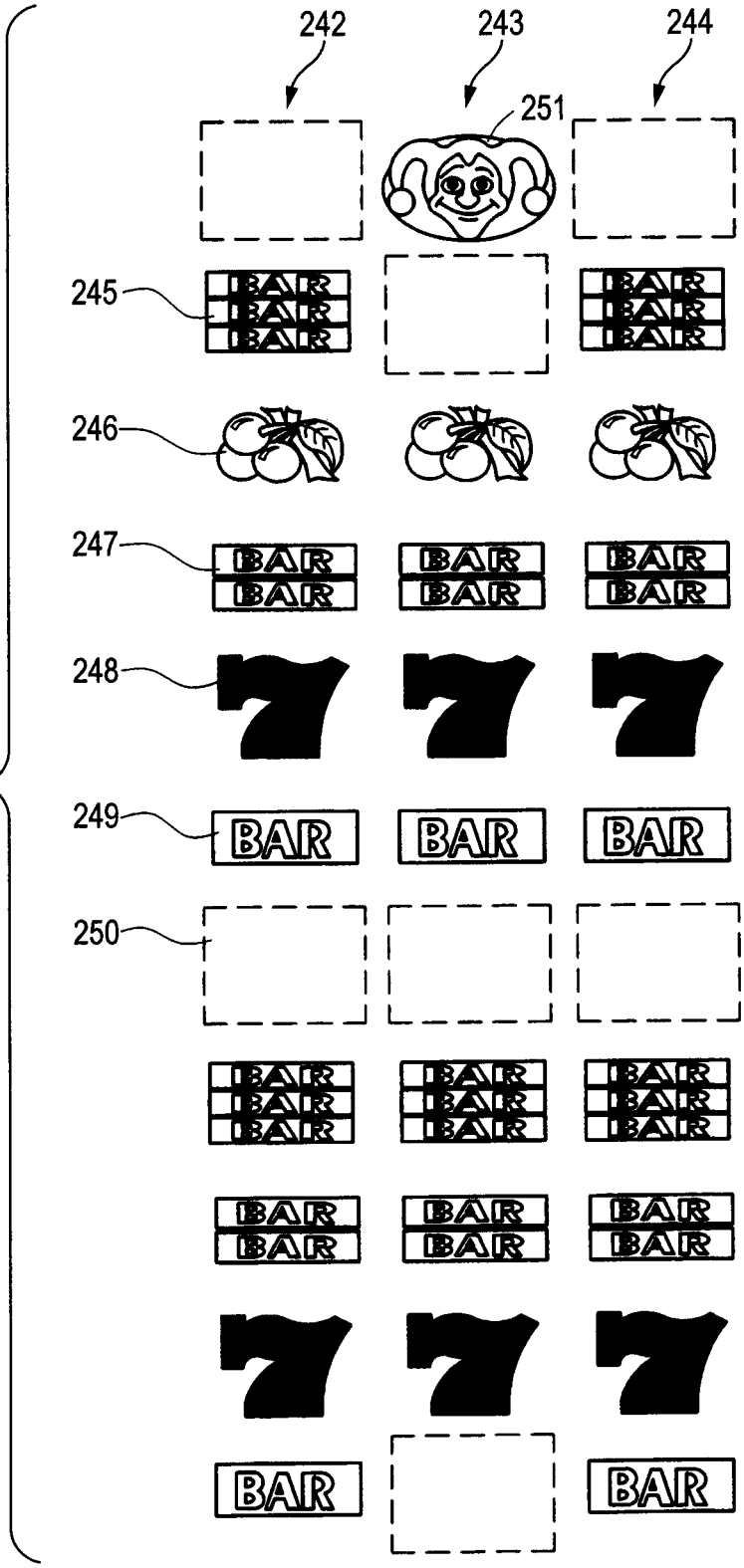

FIG. 16

255

DESCRIPTION	RANDOM NUMBER RANGE
TRIGGER OF FREE GAME	0-121
7	122-353
3BAR	354-427
2BAR	428-473
1BAR	474-825
CHERRY	826-1025
FAILURE	1026-16383

FIG. 17

256

DESCRIPTION	AWARD
TRIGGER OF FREE GAME	TRANSITION TO FREE GAME (ADDITION OF NUMBER OF FREE GAMES)
7	x 100
3BAR	x 30
2BAR	x 20
1BAR	x 10
CHERRY	x 2
FAILURE	0

FIG. 18

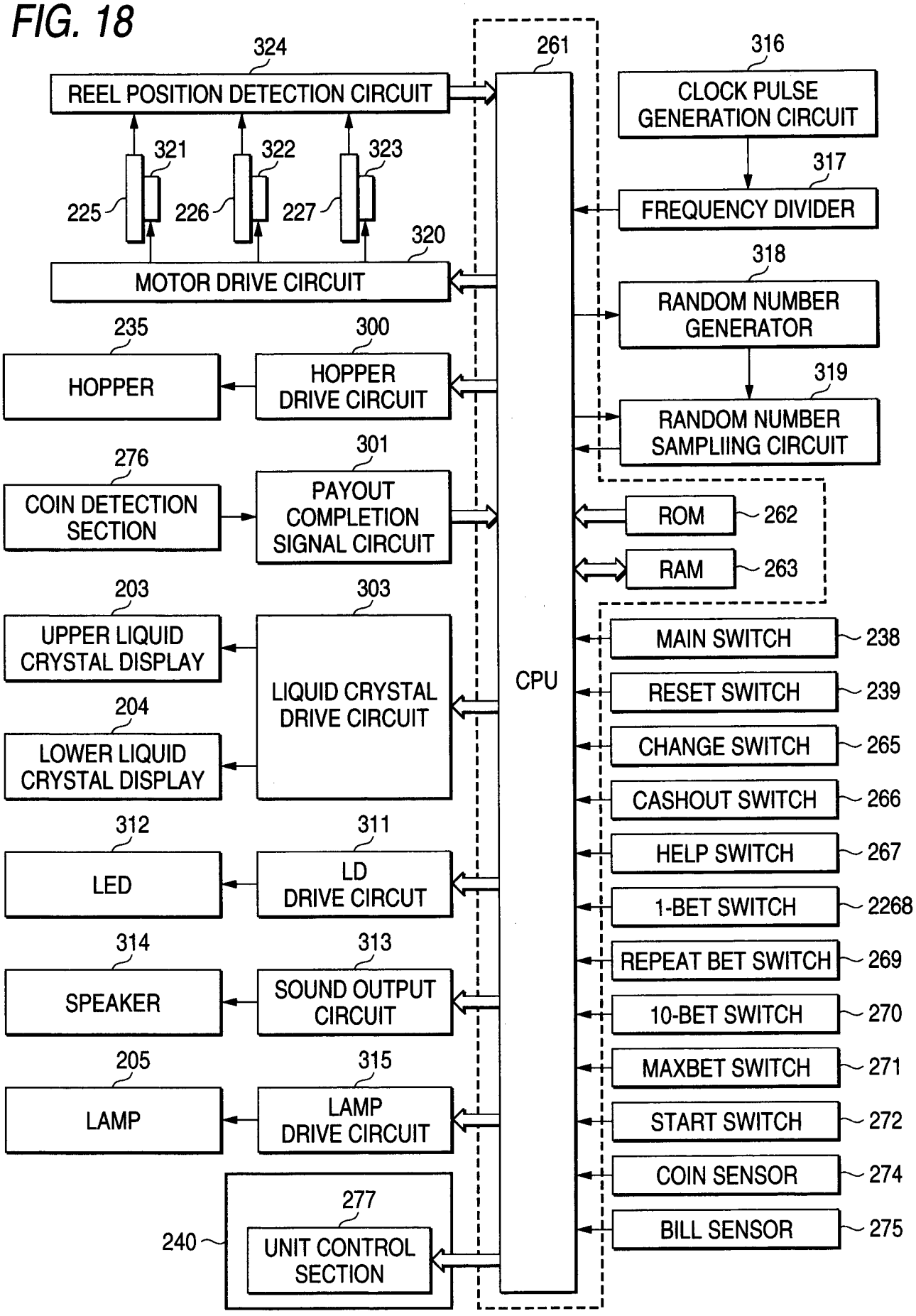
324
REEL POSITION DETECTION CIRCUIT
321
322
323
225
226
227
320
MOTOR DRIVE CIRCUIT
261
CPU
316
CLOCK PULSE GENERATION CIRCUIT
317
FREQUENCY DIVIDER
318
RANDOM NUMBER GENERATOR
319
RANDOM NUMBER SAMPLIING CIRCUIT
ROM
262
RAM
263
235
HOPPER
300
HOPPER DRIVE CIRCUIT
276
COIN DETECTION SECTION
301
PAYOUT COMPLETION SIGNAL CIRCUIT
203
UPPER LIQUID CRYSTAL DISPLAY
204
LOWER LIQUID CRYSTAL DISPLAY
303
LIQUID CRYSTAL DRIVE CIRCUIT
312
LED
311
LD DRIVE CIRCUT
314
SPEAKER
313
SOUND OUTPUT CIRCUIT
205
LAMP
315
LAMP DRIVE CIRCUIT
277
240
UNIT CONTROL SECTION
MAIN SWITCH
238
RESET SWITCH
239
CHANGE SWITCH
265
CASHOUT SWITCH
266
HELP SWITCH
267
1-BET SWITCH
2268
REPEAT BET SWITCH
269
10-BET SWITCH
270
MAXBET SWITCH
271
START SWITCH
272
COIN SENSOR
274
BILL SENSOR
275

FIG. 19

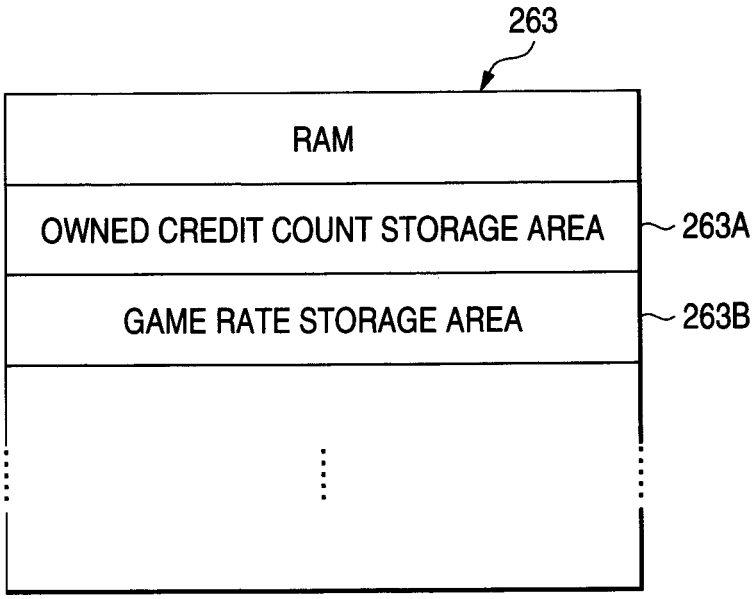
263
RAM
OWNED CREDIT COUNT STORAGE AREA
263A
GAME RATE STORAGE AREA
263B

FIG. 20

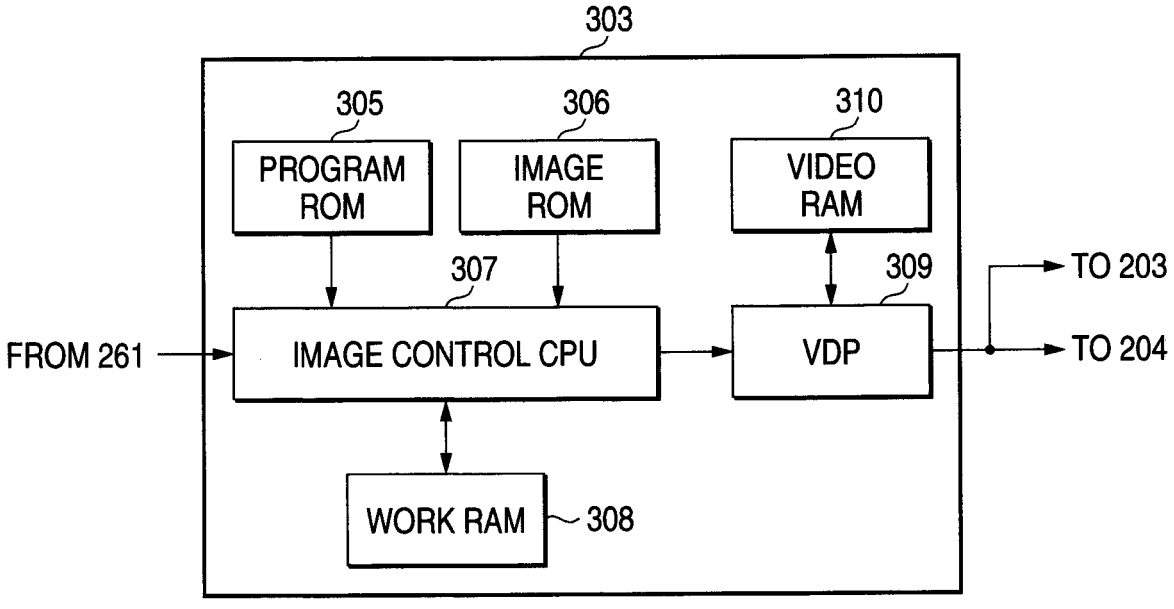
303
305
306
310
PROGRAM ROM
IMAGE ROM
VIDEO RAM
307
309
FROM 261
IMAGE CONTROL CPU
VDP
TO 203
TO 204
WORK RAM
308

FIG. 21

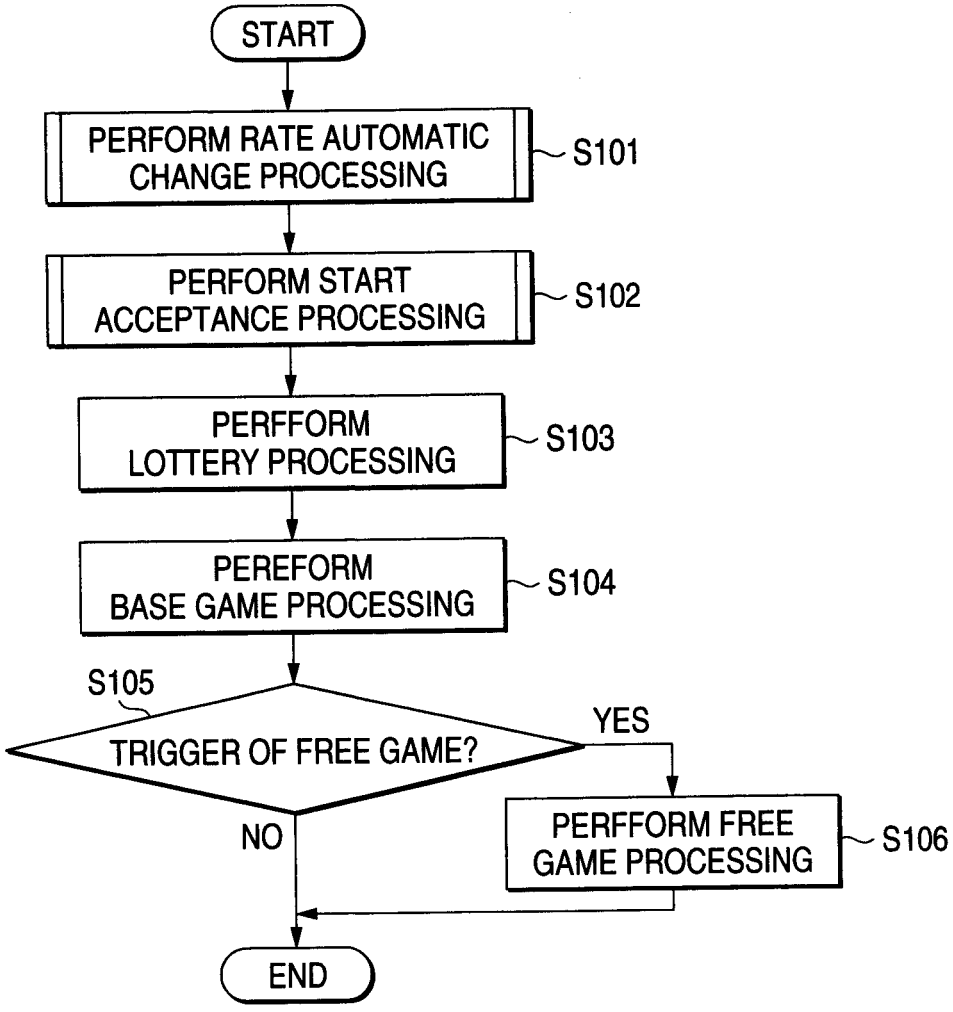
START
PERFORM RATE AUTOMATIC CHANGE PROCESSING
S101
PERFORM START ACCEPTANCE PROCESSING
S102
PERFFORM LOTTERY PROCESSING
S103
PEREFORM BASE GAME PROCESSING
S104
S105
TRIGGER OF FREE GAME?
YES
NO
PERFFORM FREE GAME PROCESSING
S106
END

FIG. 22

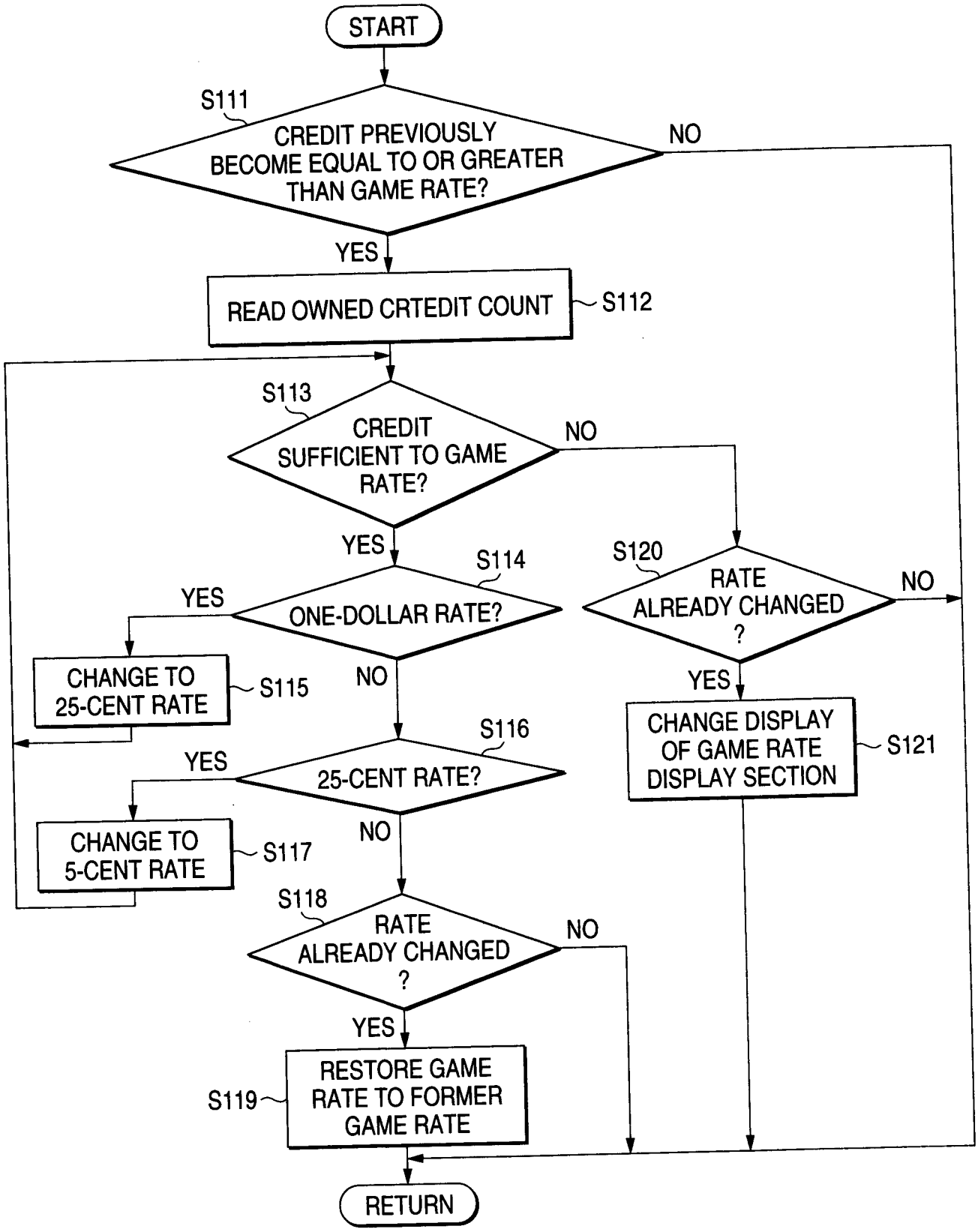
START
S111
CREDIT PREVIOUSLY BECOME EQUAL TO OR GREATER THAN GAME RATE?
NO
YES
READ OWNED CRTEDIT COUNT
S112
S113
CREDIT SUFFICIENT TO GAME RATE?
NO
YES
S114
ONE-DOLLAR RATE?
YES
CHANGE TO 25-CENT RATE
S115
NO
S116
25-CENT RATE?
YES
CHANGE TO 5-CENT RATE
S117
NO
S118
RATE ALREADY CHANGED ?
NO
YES
RESTORE GAME RATE TO FORMER GAME RATE
S119
S120
RATE ALREADY CHANGED ?
NO
YES
CHANGE DISPLAY OF GAME RATE DISPLAY SECTION
S121
RETURN

FIG. 23

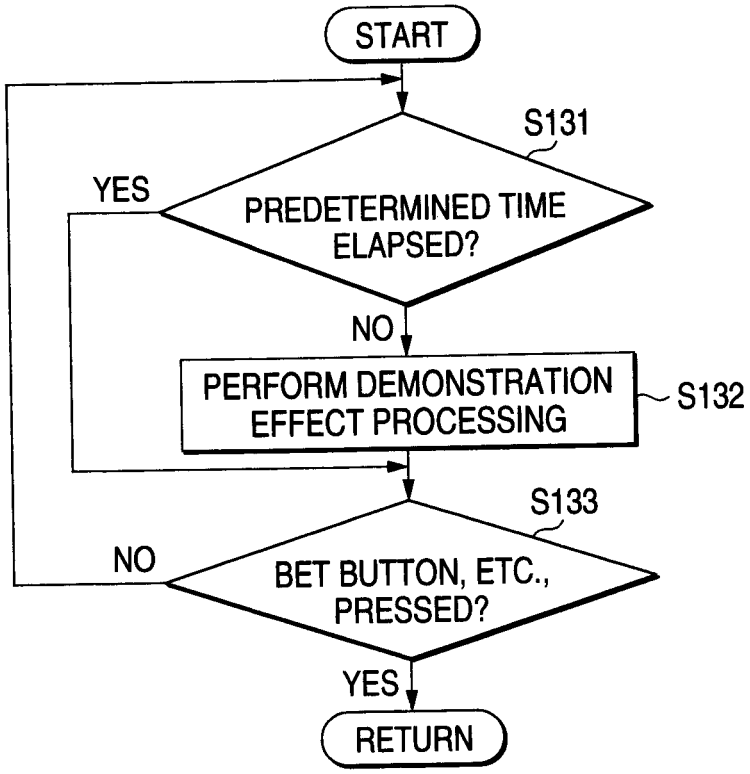
START
S131
YES
PREDETERMINED TIME ELAPSED?
NO
PERFORM DEMONSTRATION EFFECT PROCESSING
S132
S133
NO
BET BUTTON, ETC., PRESSED?
YES
RETURN

FIG. 24

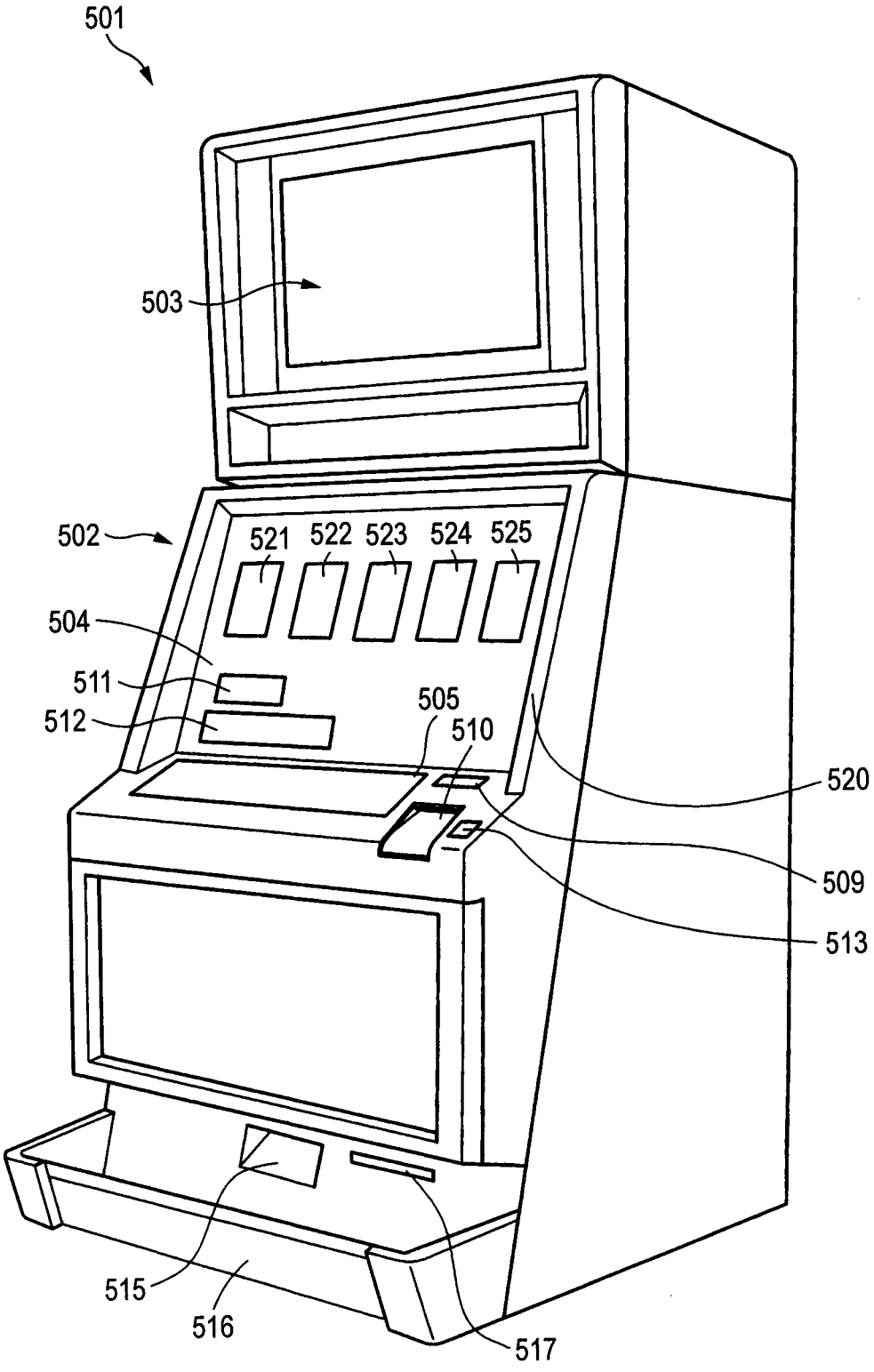
501
503
502
521
522
523
524
525
504
511
512
505
510
520
509
513
515
516
517

FIG. 25

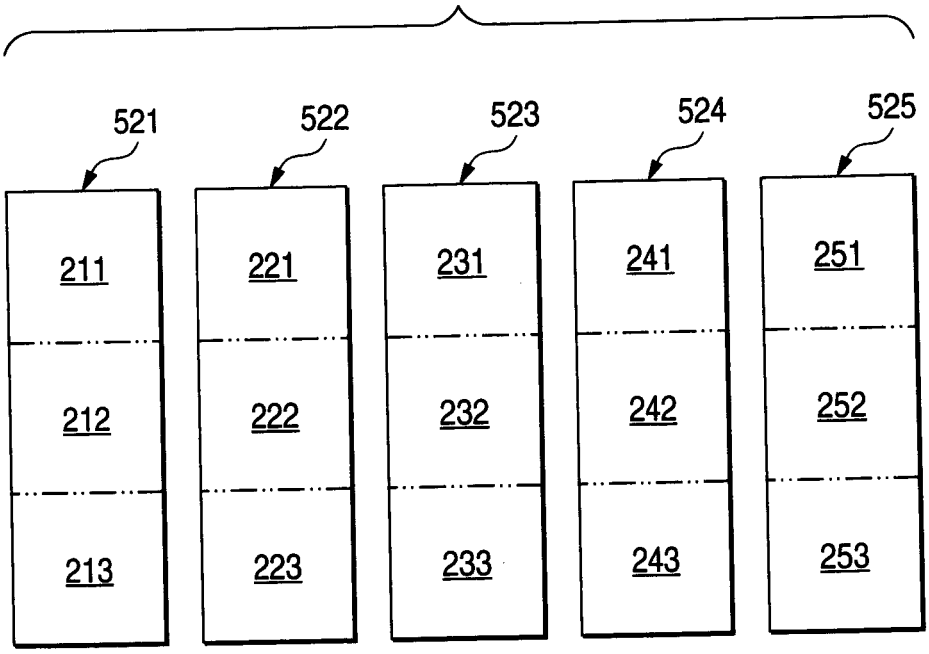
521
522
523
524
525
211
212
213
221
222
223
231
232
233
241
242
243
251
252
253

FIG. 26

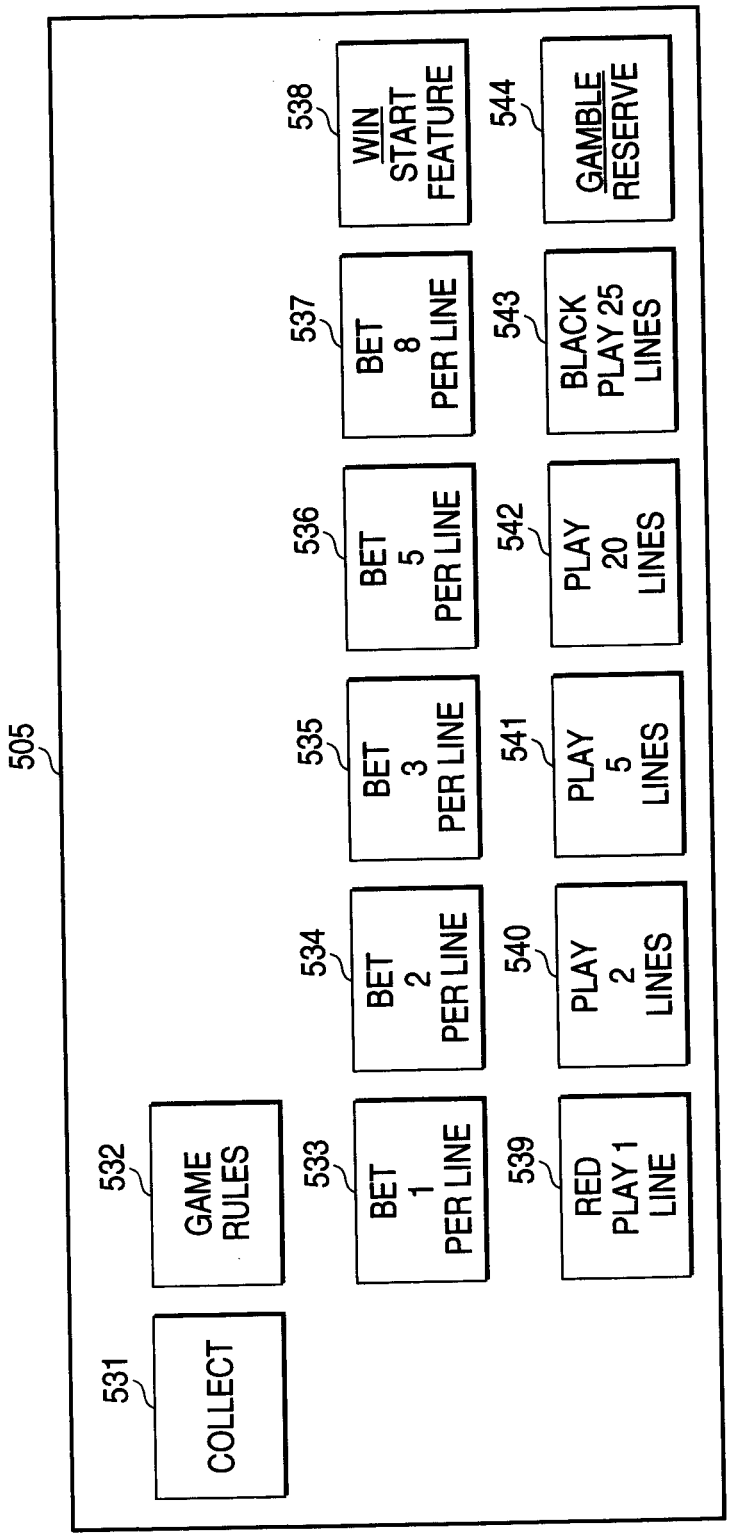
505
531
COLLECT
532
GAME RULES
533
BET 1 PER LINE
534
BET 2 PER LINE
535
BET 3 PER LINE
536
BET 5 PER LINE
537
BET 8 PER LINE
538
WIN START FEATURE
539
RED PLAY 1 LINE
540
PLAY 2 LINES
541
PLAY 5 LINES
542
PLAY 20 LINES
543
BLACK PLAY 25 LINES
544
GAMBLE RESERVE

FIG. 27

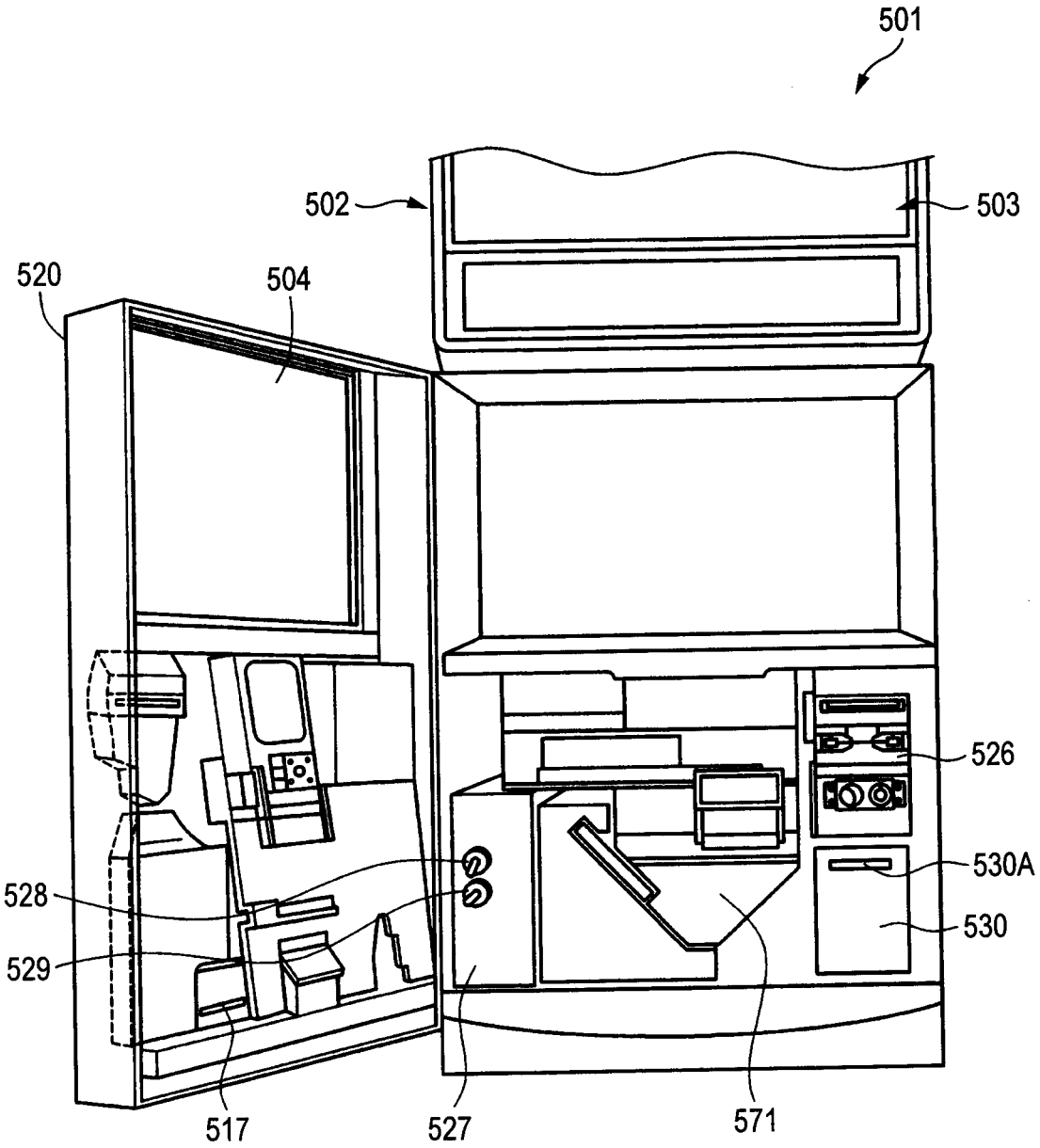

FIG. 28

601

FIRST REEL BAND	
CODE NO.	SYMBOL
00	J
01	Q
02	LOBSTER
03	J
04	Q
05	CRAB
06	A
07	WORM
08	K
09	FISH
10	PUNK
11	Q
12	SHARK
13	WILD
14	K
15	A
16	OCTOPUS
17	J
18	Q
19	FISH
20	K
21	J
22	SARDINE
23	CRAB
24	WILD
25	WORM
26	Q
27	CRAB
28	A
29	FISH

602

SECOND REEL BAND	
CODE NO.	SYMBOL
00	OCTOPUS
01	A
02	LOBSTER
03	OCTOPUS
04	K
05	WILD
06	FISH
07	WORM
08	J
09	CRAB
10	OCTOPUS
11	A
12	SARDINE
13	WORM
14	J
15	OCTOPUS
16	SHARK
17	J
18	OCTOPUS
19	CRAB
20	Q
21	PUNK
22	CRAB
23	WILD
24	J
25	WORM
26	CRAB
27	K
28	OCTOPUS
29	WORM

603

THIRD REEL BAND	
CODE NO.	SYMBOL
00	A
01	K
02	LOBSTER
03	WORM
04	Q
05	LOBSTER
06	PUNK
07	A
08	J
09	SARDINE
10	WILD
11	Q
12	WORM
13	K
14	FISH
15	Q
16	CRAB
17	A
18	WILD
19	SHARK
20	Q
21	K
22	OCTOPUS
23	Q
24	A
25	WORM
26	J
27	Q
28	PUNK
29	K

604

FOURTH REEL BAND	
CODE NO.	SYMBOL
00	Q
01	J
02	LOBSTER
03	Q
04	WILD
05	LOBSTER
06	A
07	K
08	SARDINE
09	A
10	K
11	CRAB
12	PUNK
13	K
14	SHARK
15	WORM
16	A
17	OCTOPUS
18	FISH
19	K
20	WILD
21	PUNK
22	A
23	FISH
24	CRAB
25	K
26	Q
27	OCTOPUS
28	WORM
29	Q

605

FIFTH REEL BAND	
CODE NO.	SYMBOL
00	J
01	A
02	LOBSTER
03	J
04	A
05	FISH
06	CRAB
07	PUNK
08	K
09	SARDINE
10	Q
11	CRAB
12	K
13	WORM
14	FISH
15	WILD
16	OCTOPUS
17	Q
18	WORM
19	J
20	Q
21	OCTOPUS
22	A
23	PUNK
24	WORM
25	Q
26	CRAB
27	WILD
28	K
29	OCTOPUS

FIG. 29

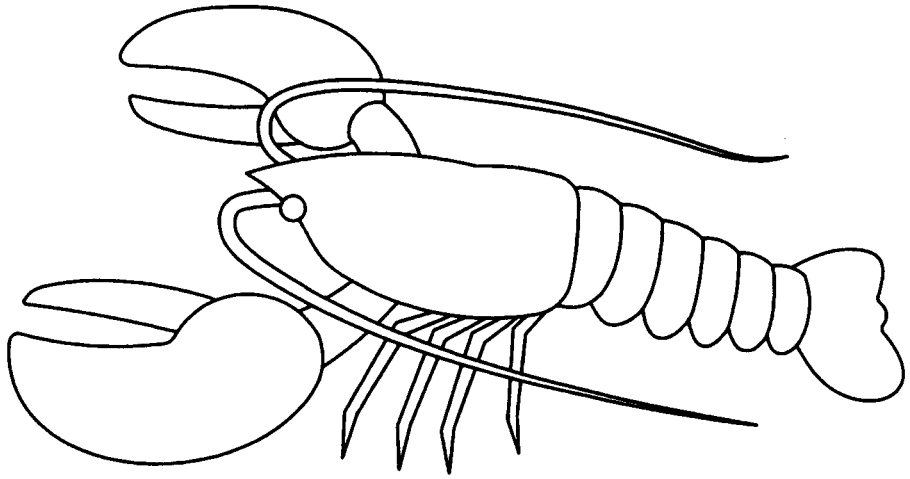

FIG. 30

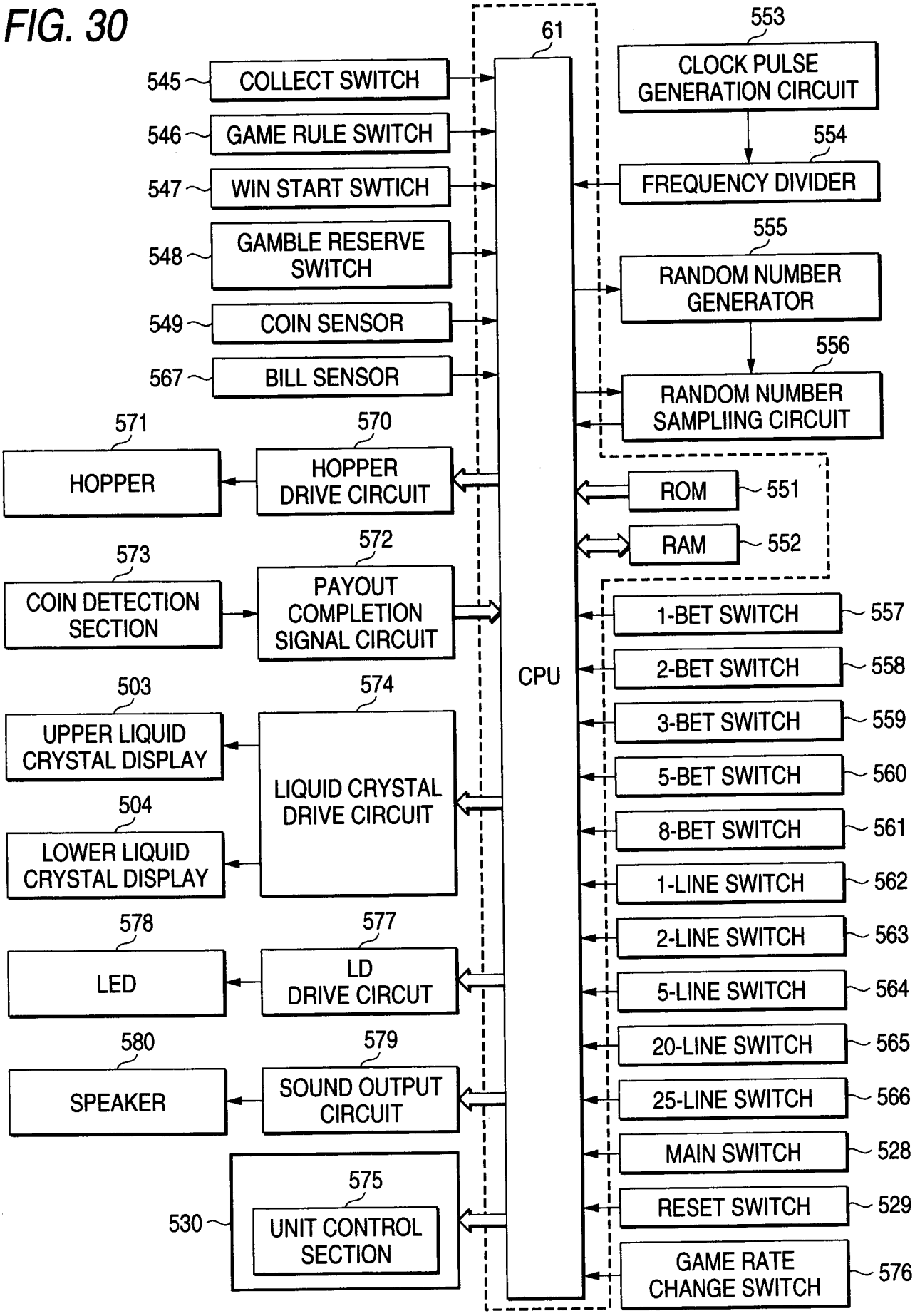
61
CPU
545 COLLECT SWITCH
546 GAME RULE SWITCH
547 WIN START SWTICH
548 GAMBLE RESERVE SWITCH
549 COIN SENSOR
567 BILL SENSOR
553 CLOCK PULSE GENERATION CIRCUIT
554 FREQUENCY DIVIDER
555 RANDOM NUMBER GENERATOR
556 RANDOM NUMBER SAMPLIING CIRCUIT
ROM 551
RAM 552
571 HOPPER
570 HOPPER DRIVE CIRCUIT
573 COIN DETECTION SECTION
572 PAYOUT COMPLETION SIGNAL CIRCUIT
503 UPPER LIQUID CRYSTAL DISPLAY
504 LOWER LIQUID CRYSTAL DISPLAY
574 LIQUID CRYSTAL DRIVE CIRCUIT
578 LED
577 LD DRIVE CIRCUT
580 SPEAKER
579 SOUND OUTPUT CIRCUIT
530
575 UNIT CONTROL SECTION
1-BET SWITCH 557
2-BET SWITCH 558
3-BET SWITCH 559
5-BET SWITCH 560
8-BET SWITCH 561
1-LINE SWITCH 562
2-LINE SWITCH 563
5-LINE SWITCH 564
20-LINE SWITCH 565
25-LINE SWITCH 566
MAIN SWITCH 528
RESET SWITCH 529
GAME RATE CHANGE SWITCH 576

FIG. 31

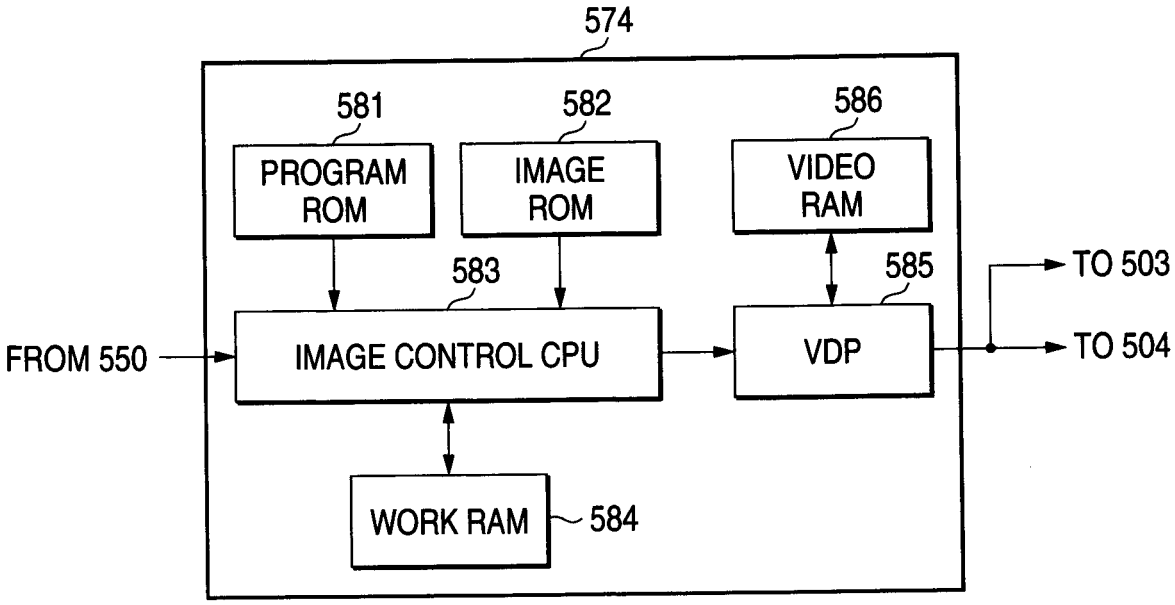
574
581
582
586
PROGRAM ROM
IMAGE ROM
VIDEO RAM
583
585
TO 503
FROM 550
IMAGE CONTROL CPU
VDP
TO 504
WORK RAM
584

FIG. 32

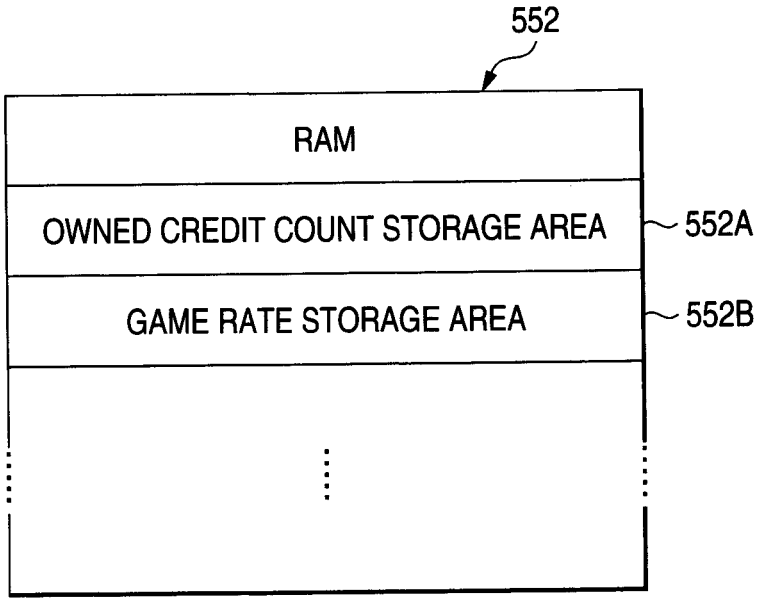
552
RAM
OWNED CREDIT COUNT STORAGE AREA
552A
GAME RATE STORAGE AREA
552B

FIG. 33

568

CODE NO.	RANDOM NUMBER
00	0
01	1
02	2
03	3
04	4
05	5
06	6
07	7
08	8
09	9
10	10
11	11
12	12
13	13
14	14
15	15
16	16
17	17
18	18
19	19
20	20
21	21
22	22
23	23
24	24
25	25
26	26
27	27
28	28
29	29

FIG. 34

569

	2K	3K	4K	5K	
LOBSTER	10	320	2500	6000/JP	LEFT → RIGHT
SHARK	3	25	150	1000	LEFT → RIGHT
FISH	2	15	120	500	LEFT → RIGHT
PUNK	2	10	120	400	LEFT → RIGHT
OCTOPUS	2	8	50	300	LEFT → RIGHT
CRAB		7	50	200	LEFT → RIGHT
WORM		6	40	150	LEFT → RIGHT
A		5	25	120	LEFT → RIGHT
K		5	25	120	LEFT → RIGHT
Q		5	20	100	LEFT → RIGHT
J		5	20	100	LEFT → RIGHT
SARDINE	2	5	10	125	SCATTER/TRIGGER

FIG. 35

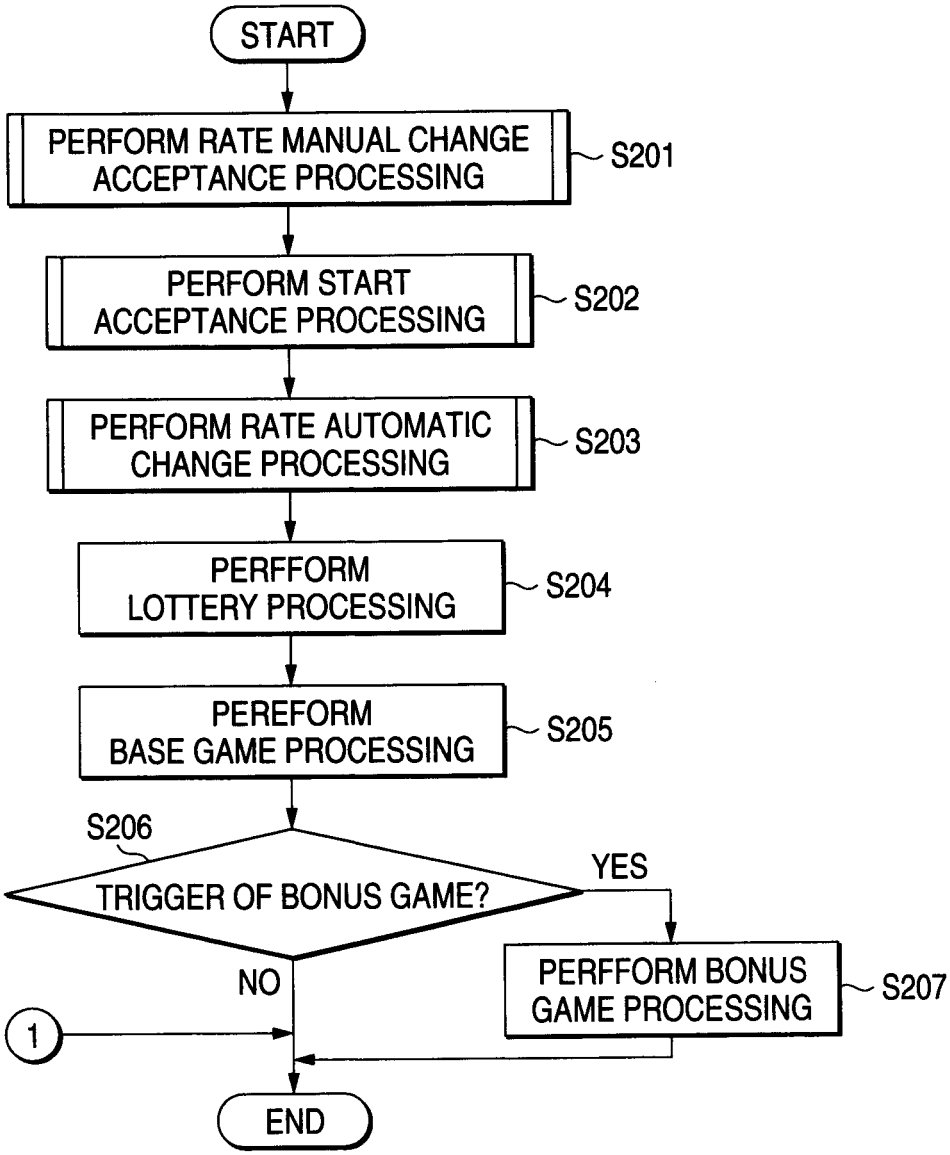
START
PERFORM RATE MANUAL CHANGE ACCEPTANCE PROCESSING
S201
PERFORM START ACCEPTANCE PROCESSING
S202
PERFORM RATE AUTOMATIC CHANGE PROCESSING
S203
PERFFORM LOTTERY PROCESSING
S204
PEREFORM BASE GAME PROCESSING
S205
S206
TRIGGER OF BONUS GAME?
YES
NO
PERFFORM BONUS GAME PROCESSING
S207
1
END

FIG. 36

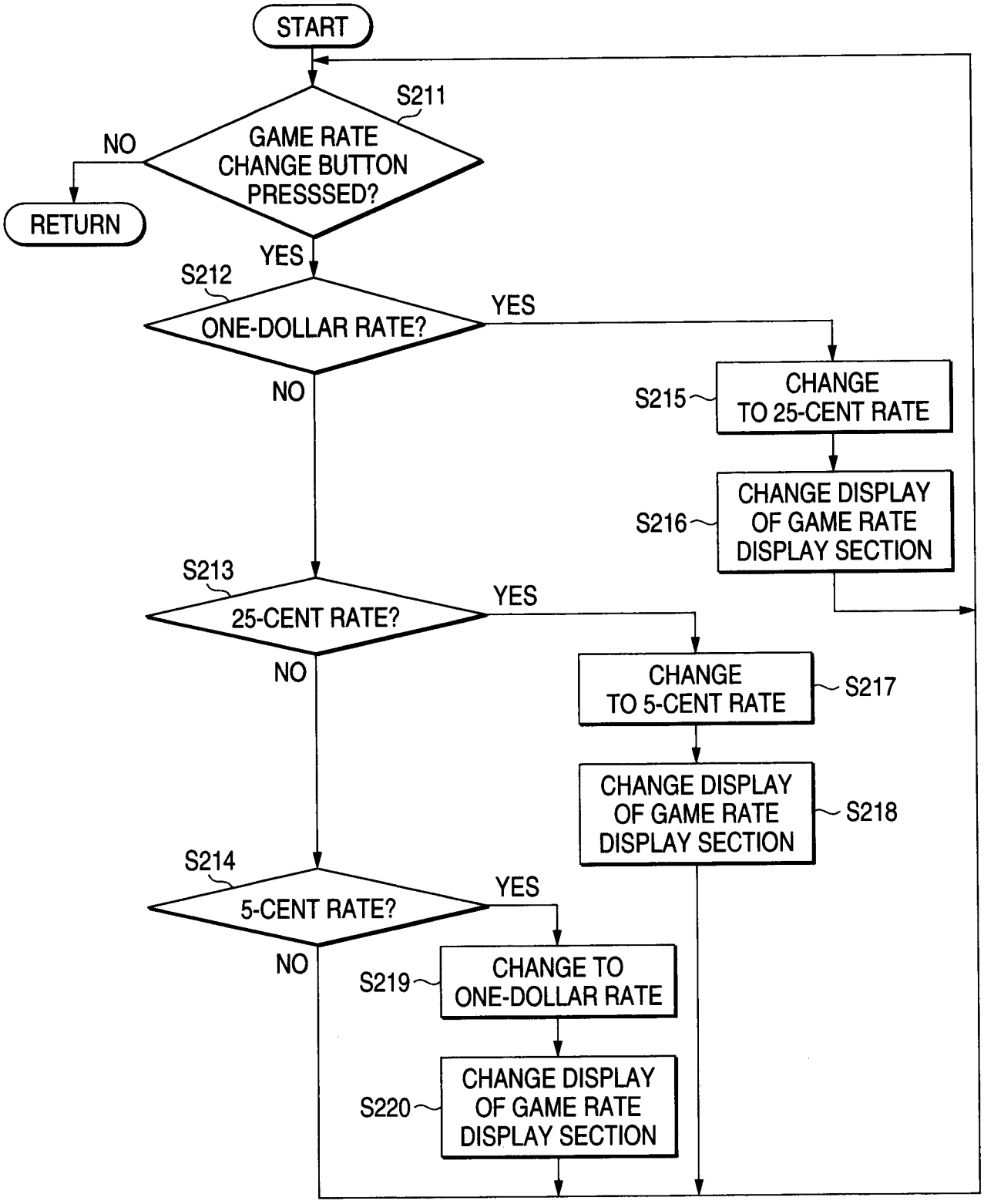
START
S211
GAME RATE CHANGE BUTTON PRESSSED?
NO
RETURN
YES
S212
ONE-DOLLAR RATE?
YES
NO
S215
CHANGE TO 25-CENT RATE
S216
CHANGE DISPLAY OF GAME RATE DISPLAY SECTION
S213
25-CENT RATE?
YES
NO
CHANGE TO 5-CENT RATE
S217
CHANGE DISPLAY OF GAME RATE DISPLAY SECTION
S218
S214
5-CENT RATE?
YES
NO
S219
CHANGE TO ONE-DOLLAR RATE
S220
CHANGE DISPLAY OF GAME RATE DISPLAY SECTION

FIG. 37

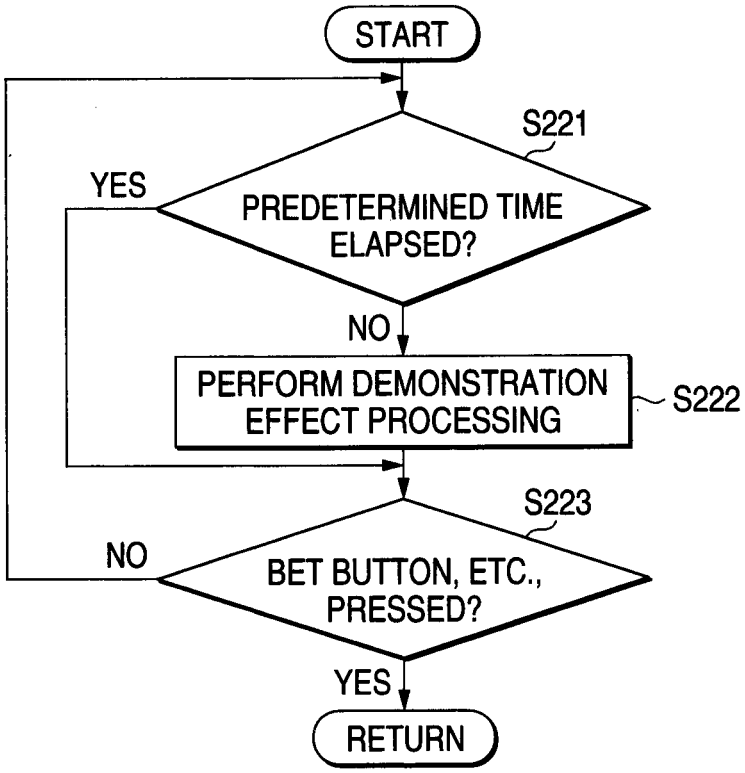
START
S221
YES
PREDETERMINED TIME ELAPSED?
NO
PERFORM DEMONSTRATION EFFECT PROCESSING
S222
S223
NO
BET BUTTON, ETC., PRESSED?
YES
RETURN

FIG. 38

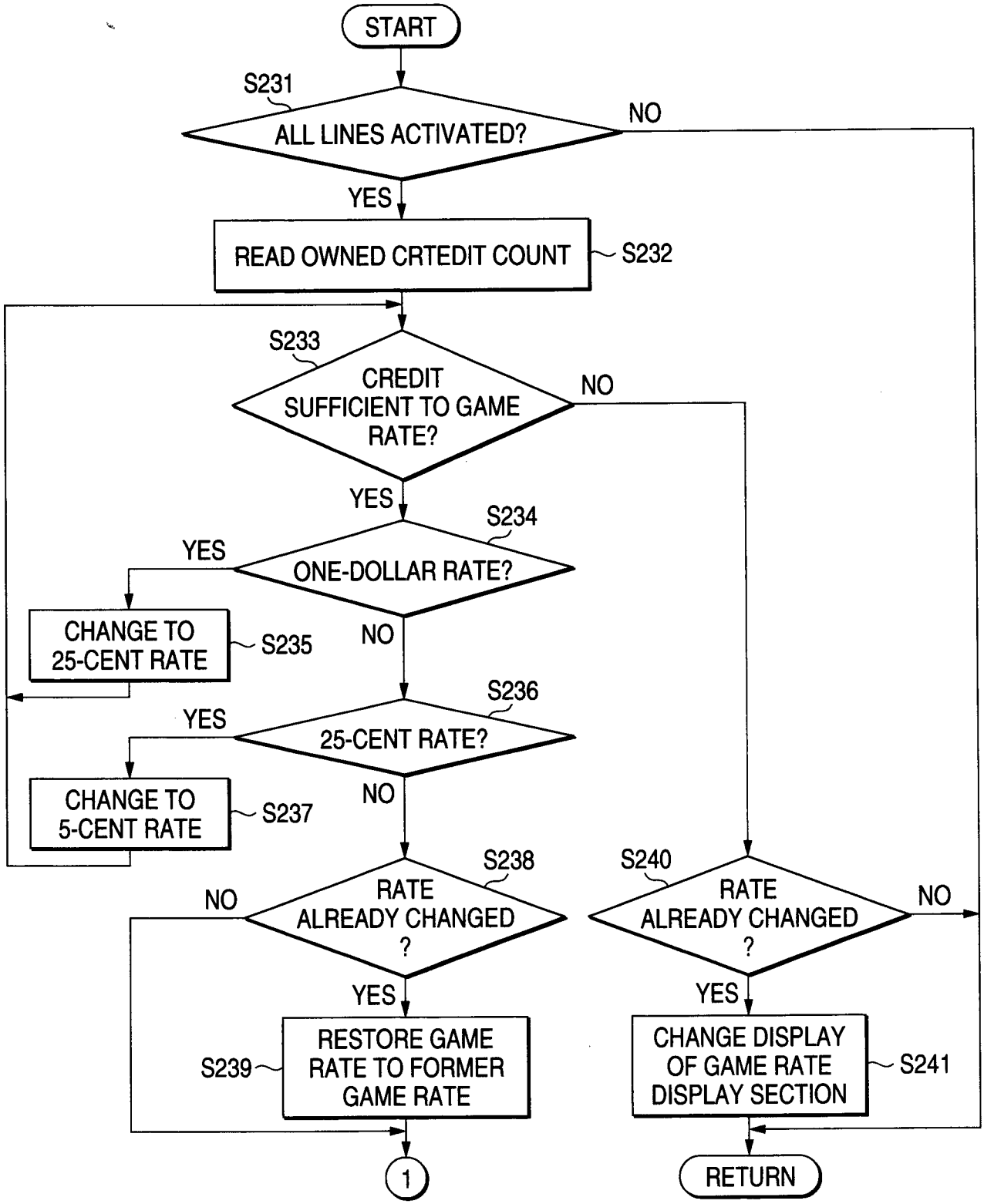
START
S231
ALL LINES ACTIVATED?
NO
YES
READ OWNED CRTEDIT COUNT
S232
S233
CREDIT SUFFICIENT TO GAME RATE?
NO
YES
S234
YES
ONE-DOLLAR RATE?
CHANGE TO 25-CENT RATE
S235
NO
S236
YES
25-CENT RATE?
CHANGE TO 5-CENT RATE
S237
NO
S238
NO
RATE ALREADY CHANGED ?
YES
RESTORE GAME RATE TO FORMER GAME RATE
S239
S240
RATE ALREADY CHANGED ?
NO
YES
CHANGE DISPLAY OF GAME RATE DISPLAY SECTION
S241
1
RETURN