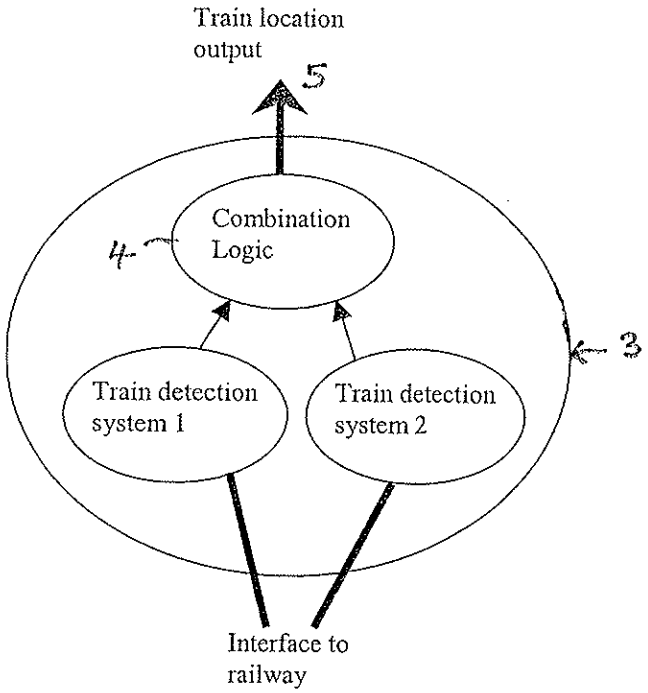
Train location output
5
Combination Logic
4
3
Train detection system 1
Train detection system 2
Interface to railway

Fig. 1

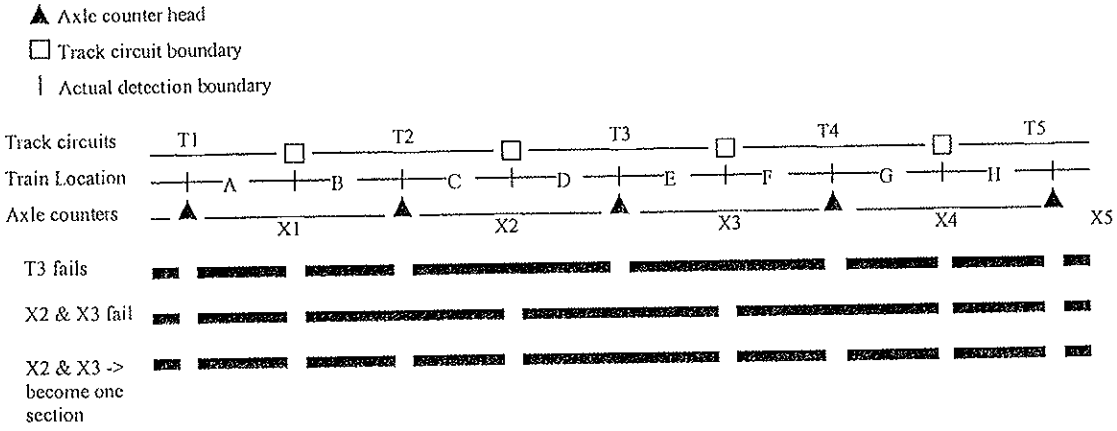
Axle counter head
Track circuit boundary
Actual detection boundary
Track circuits
Train Location
Axle counters
T1
T2
T3
T4
T5
A
B
C
D
E
F
G
H
X1
X2
X3
X4
X5
T3 fails
X2 & X3 fail
X2 & X3 -> become one section

Fig. 2

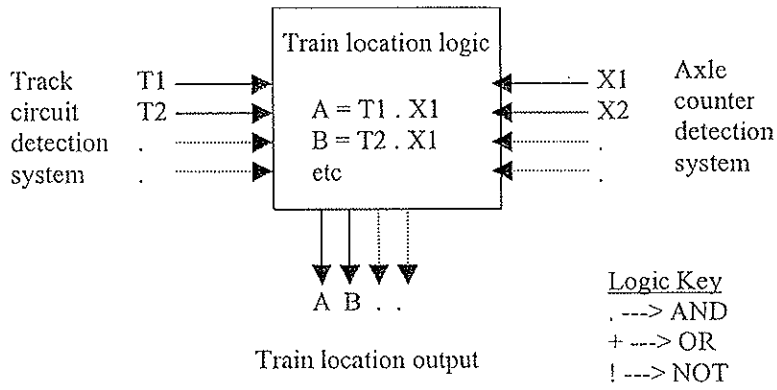
Train location logic
Track
circuit
detection
system
T1
T2
.
.
A = T1 . X1
B = T2 . X1
etc
X1
X2
.
.
Axle
counter
detection
system
A B . .
Train location output
Logic Key
. ---> AND
+ ---> OR
! ---> NOT

Fig. 3

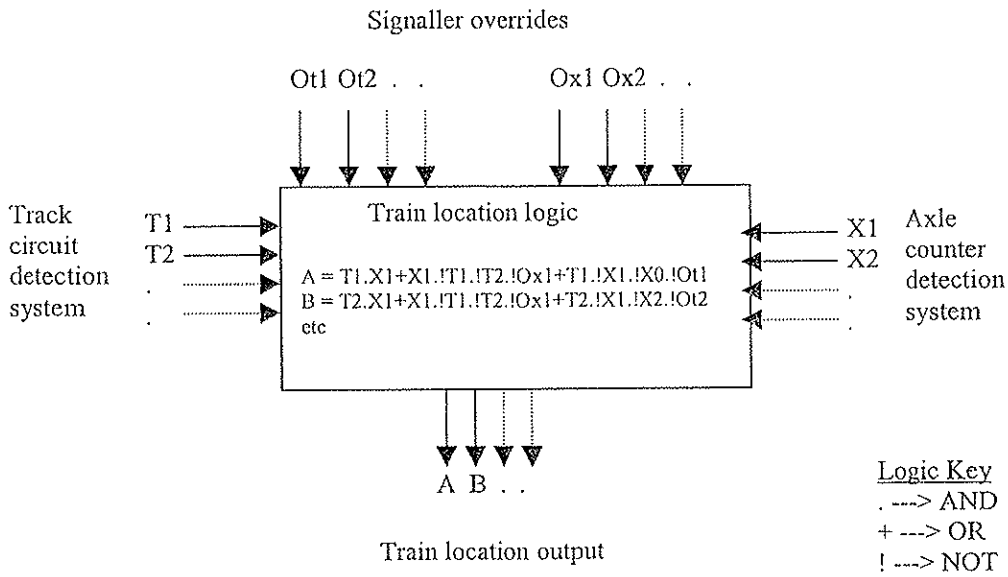
Signaller overrides
Ot1 Ot2 . .
Ox1 Ox2 . .
Train location logic
Track
circuit
detection
system
T1
T2
.
.
A = T1.X1+X1.!T1.!T2.!Ox1+T1.!X1.!X0.!Ot1
B = T2.X1+X1.!T1.!T2.!Ox1+T2.!X1.!X2.!Ot2
etc
X1
X2
.
.
Axle
counter
detection
system
A B . .
Train location output
Logic Key
. ---> AND
+ ---> OR
! ---> NOT

Fig. 4