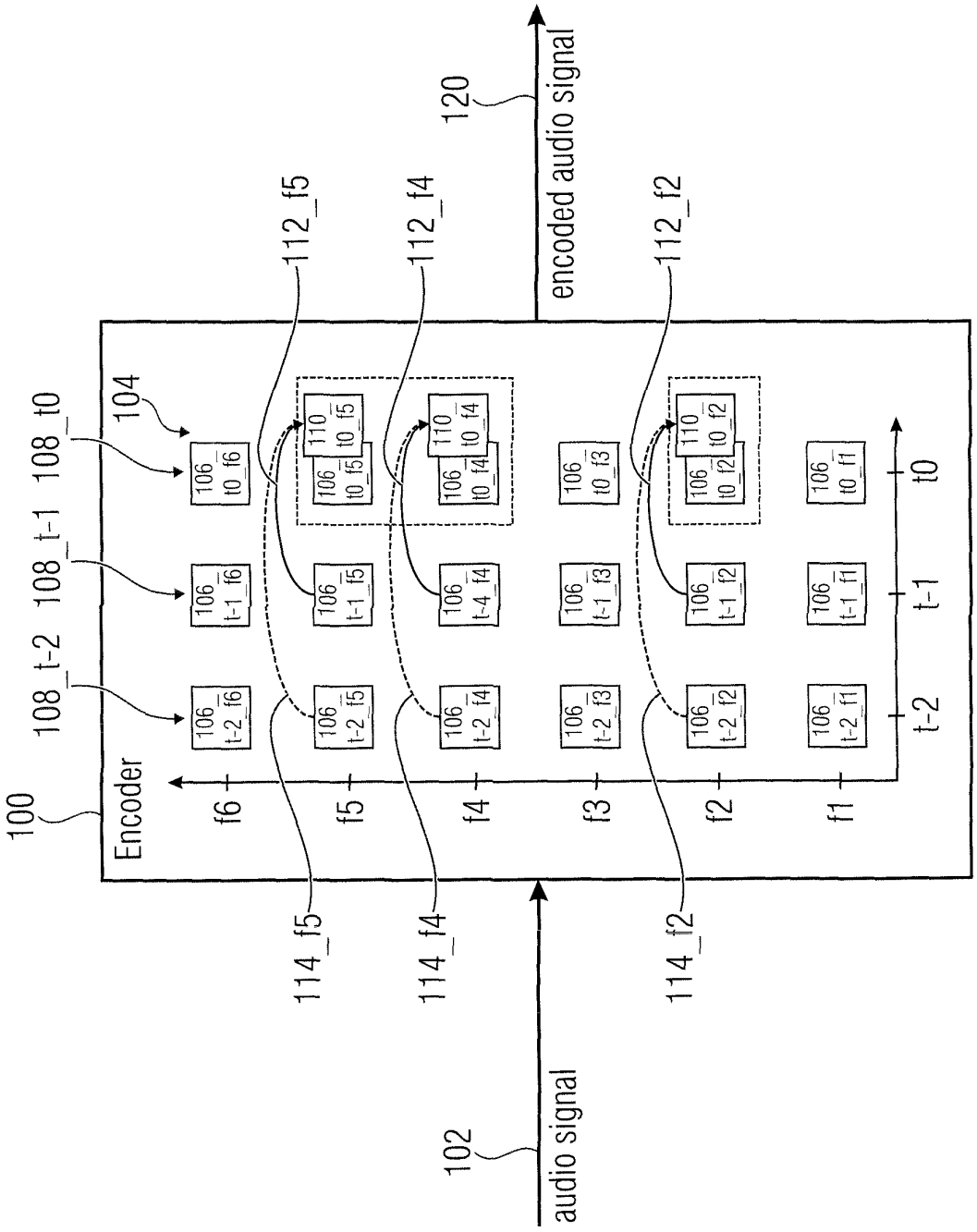
100
Encoder
102
audio signal
104
108_t0
108_t-1
108_t-2
106_t0_f6
106_t-1_f6
106_t-2_f6
106_t0_f5
106_t-1_f5
106_t-2_f5
106_t0_f4
106_t-4_f4
106_t-2_f4
106_t0_f3
106_t-1_f3
106_t-2_f3
106_t0_f2
106_t-1_f2
106_t-2_f2
106_t0_f1
106_t-1_f1
106_t-2_f1
110_t0_f5
110_t0_f4
110_t0_f2
112_f5
112_f4
112_f2
114_f5
114_f4
114_f2
f6
f5
f4
f3
f2
f1
t0
t-1
t-2
120
encoded audio signal

FIG 1

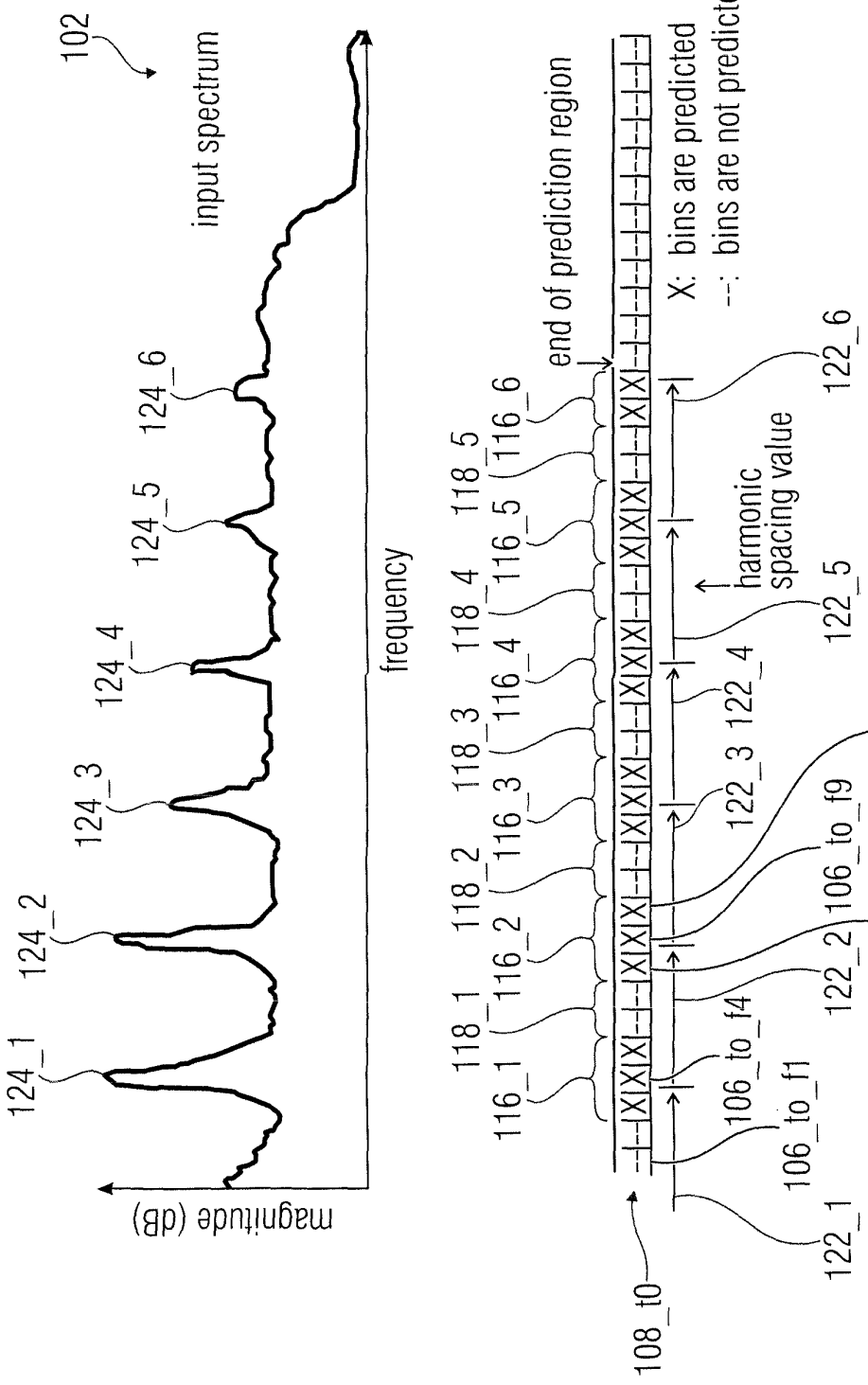
102
input spectrum
magnitude (dB)
frequency
124_1
124_2
124_3
124_4
124_5
124_6
end of prediction region
X: bins are predicted
--: bins are not predicted
harmonic spacing value
108_t0
106_to_f1
106_to_f4
106_to_f8
106_to_f9
106_to_f10
122_1
122_2
122_3
122_4
122_5
122_6

FIG 2

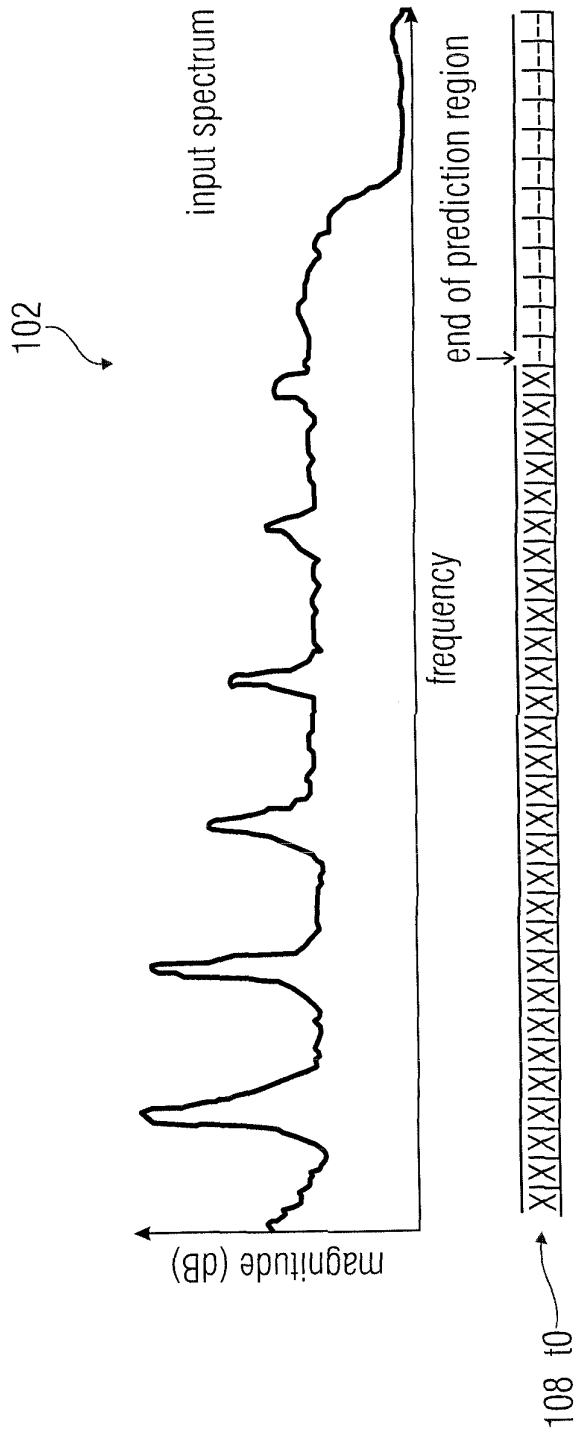
102
input spectrum
magnitude (dB)
frequency
end of prediction region
X|X|X|X|X|X|X|X|X|X|X|X|X|X|X|X|X|X|X|X|X|X|X|X|X|X|X|X|-|-|-

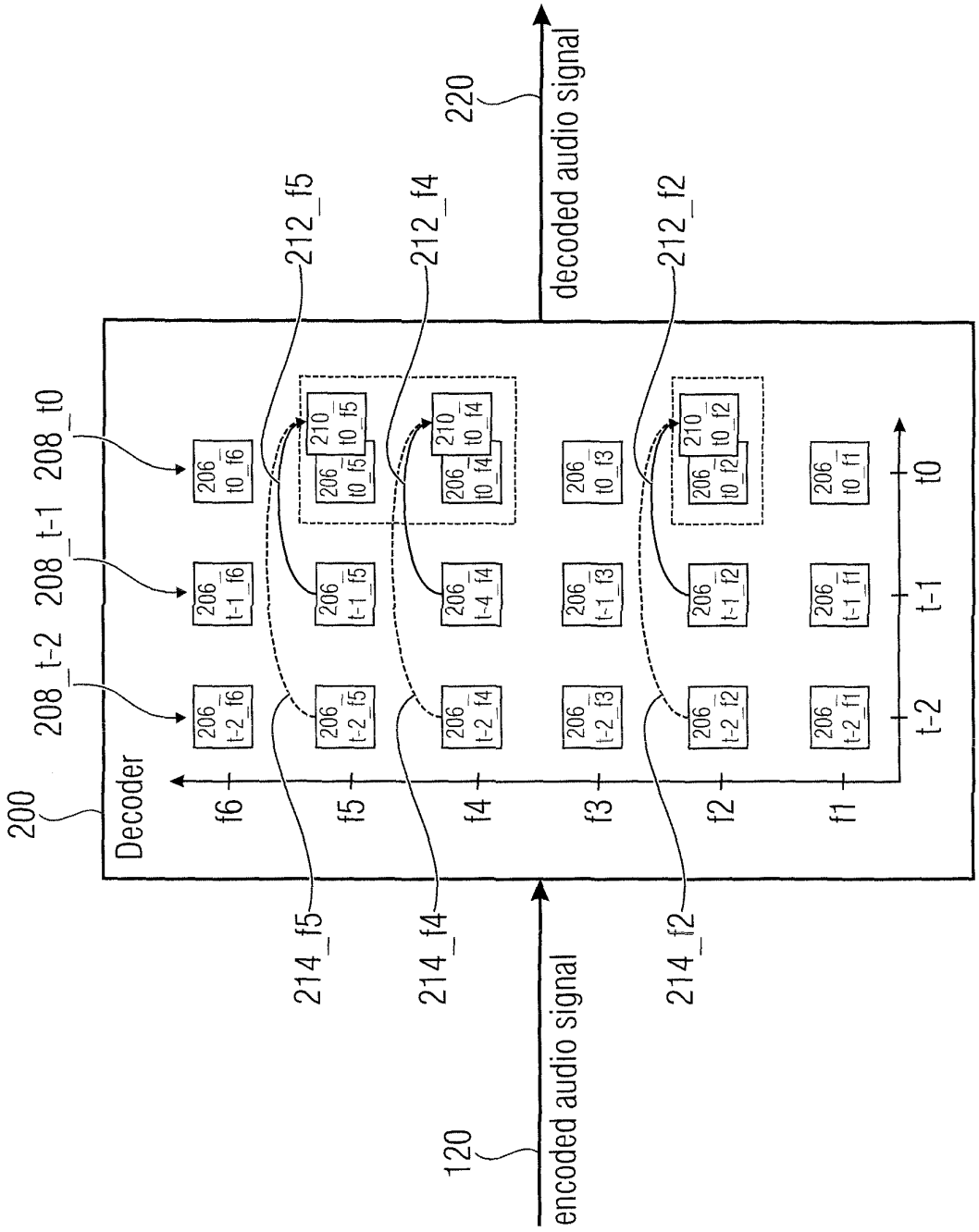
200
Decoder
208_t-2
208_t-1
208_t0
206_t-2_f6
206_t-2_f5
206_t-2_f4
206_t-2_f3
206_t-2_f2
206_t-2_f1
206_t-1_f6
206_t-1_f5
206_t-4_f4
206_t-1_f3
206_t-1_f2
206_t-1_f1
206_t0_f6
206_t0_f5
206_t0_f4
206_t0_f3
206_t0_f2
206_t0_f1
210_t0_f5
210_t0_f4
210_t0_f2
f6
f5
f4
f3
f2
f1
t-2
t-1
t0
212_f5
212_f4
212_f2
214_f5
214_f4
214_f2
220
decoded audio signal
120
encoded audio signal

FIG 4

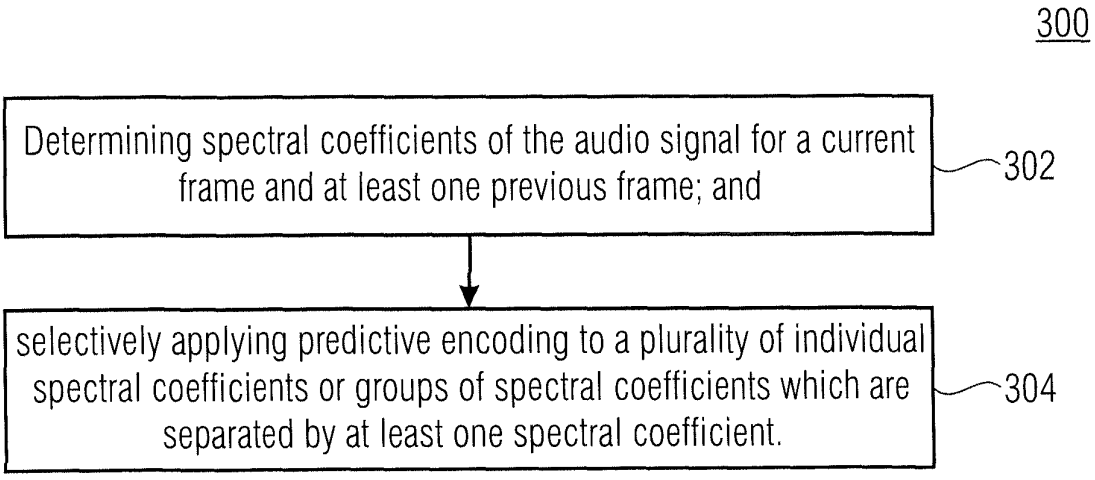
300
Determining spectral coefficients of the audio signal for a current frame and at least one previous frame; and
302
selectively applying predictive encoding to a plurality of individual spectral coefficients or groups of spectral coefficients which are separated by at least one spectral coefficient.
304

FIG 5

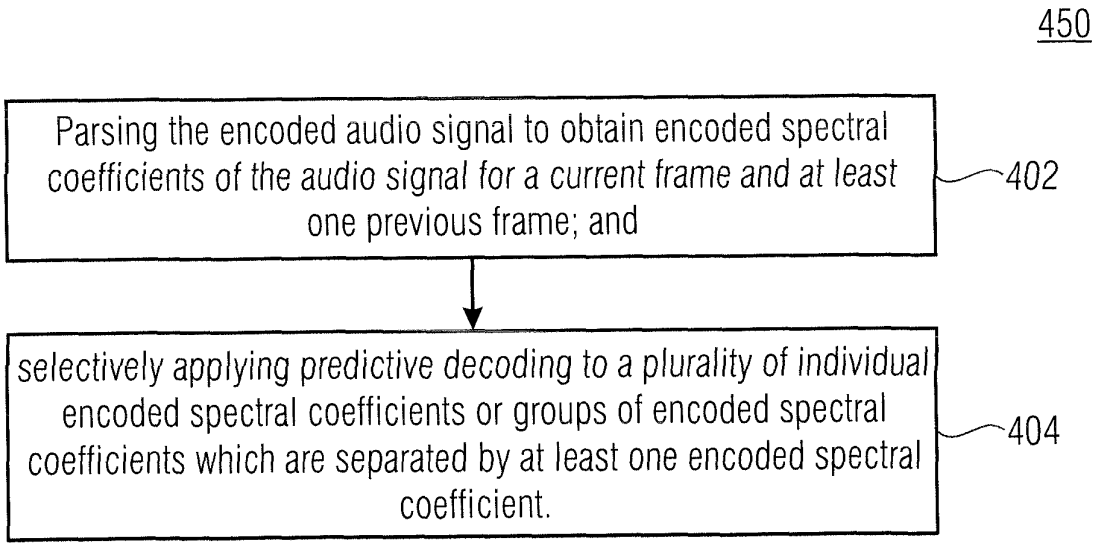
450
Parsing the encoded audio signal to obtain encoded spectral coefficients of the audio signal for a current frame and at least one previous frame; and
402
selectively applying predictive decoding to a plurality of individual encoded spectral coefficients or groups of encoded spectral coefficients which are separated by at least one encoded spectral coefficient.
404

FIG 6