FIG.1

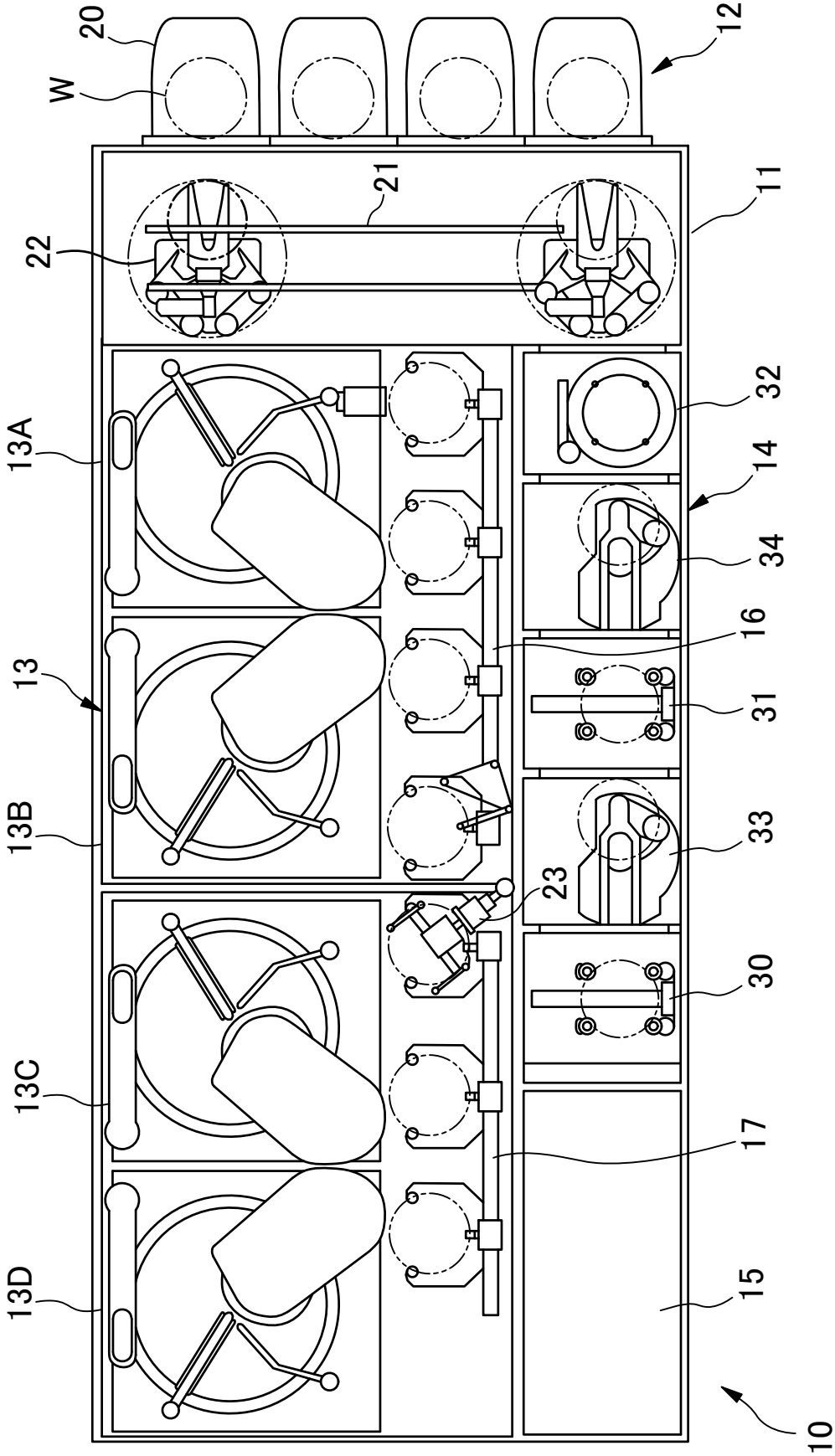

FIG.2

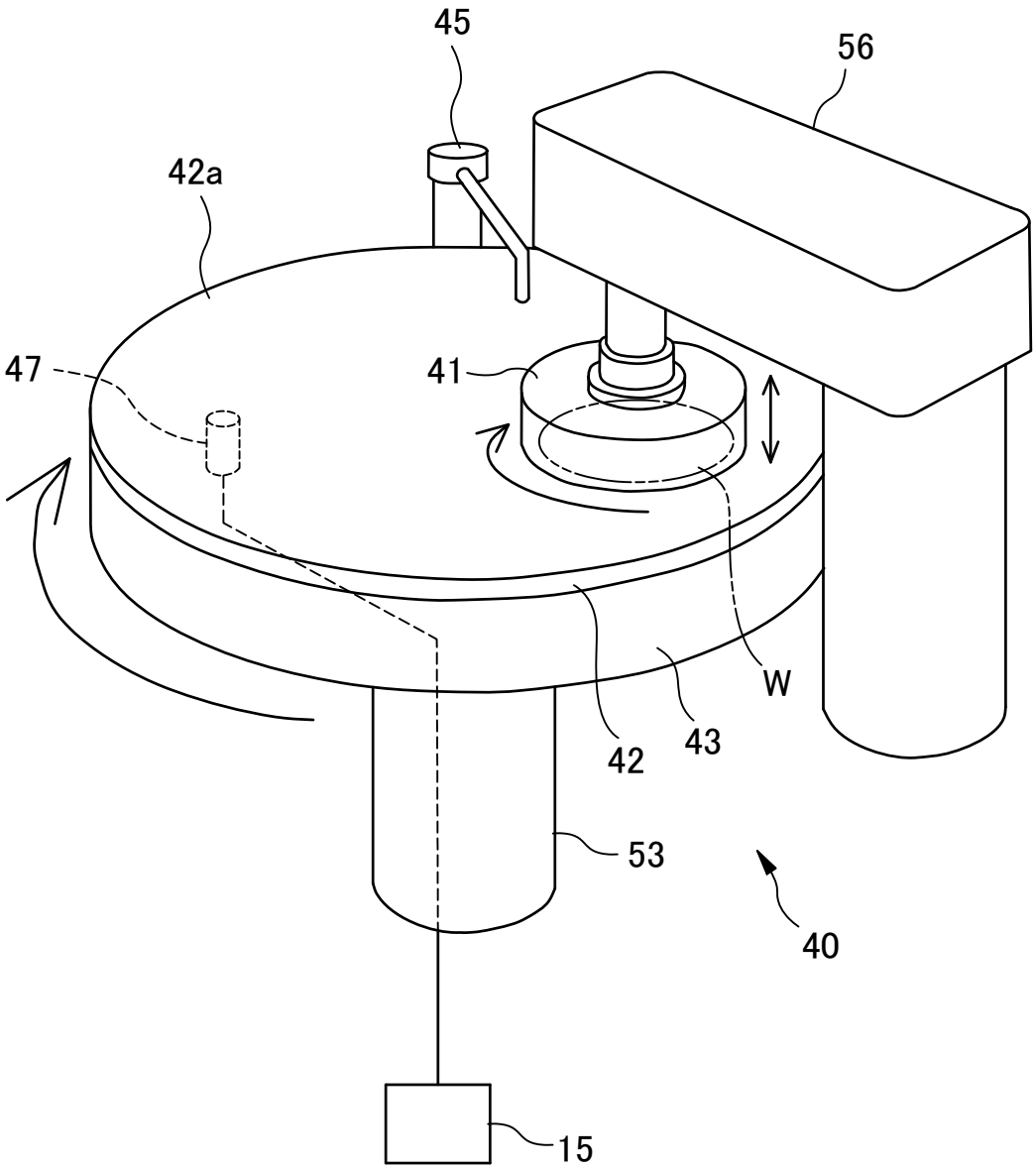

FIG.3

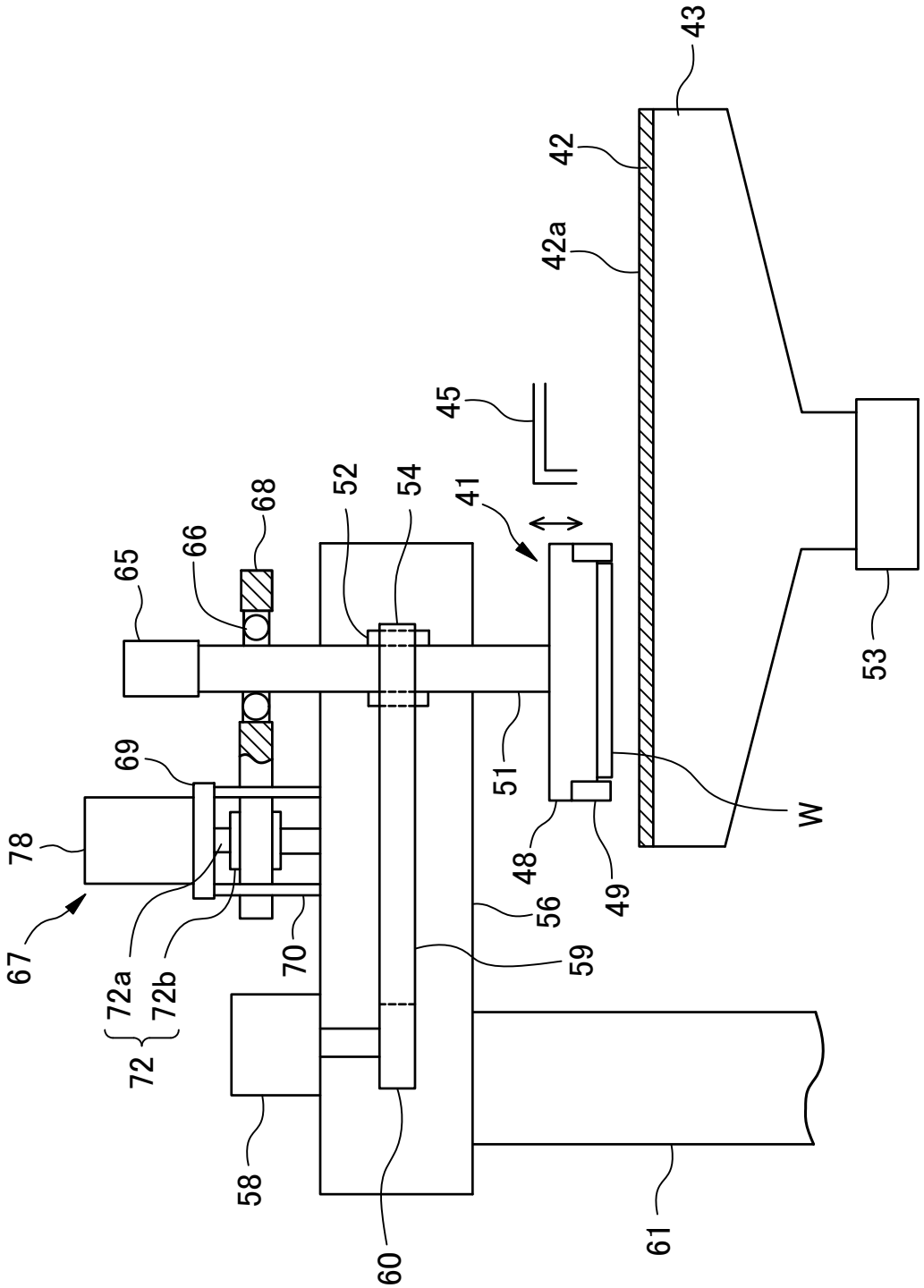
43
42
42a
45
41
52
54
68
66
65
69
78
67
72a
72b
72
70
51
48
49
56
59
W
53
58
60
61

FIG.4

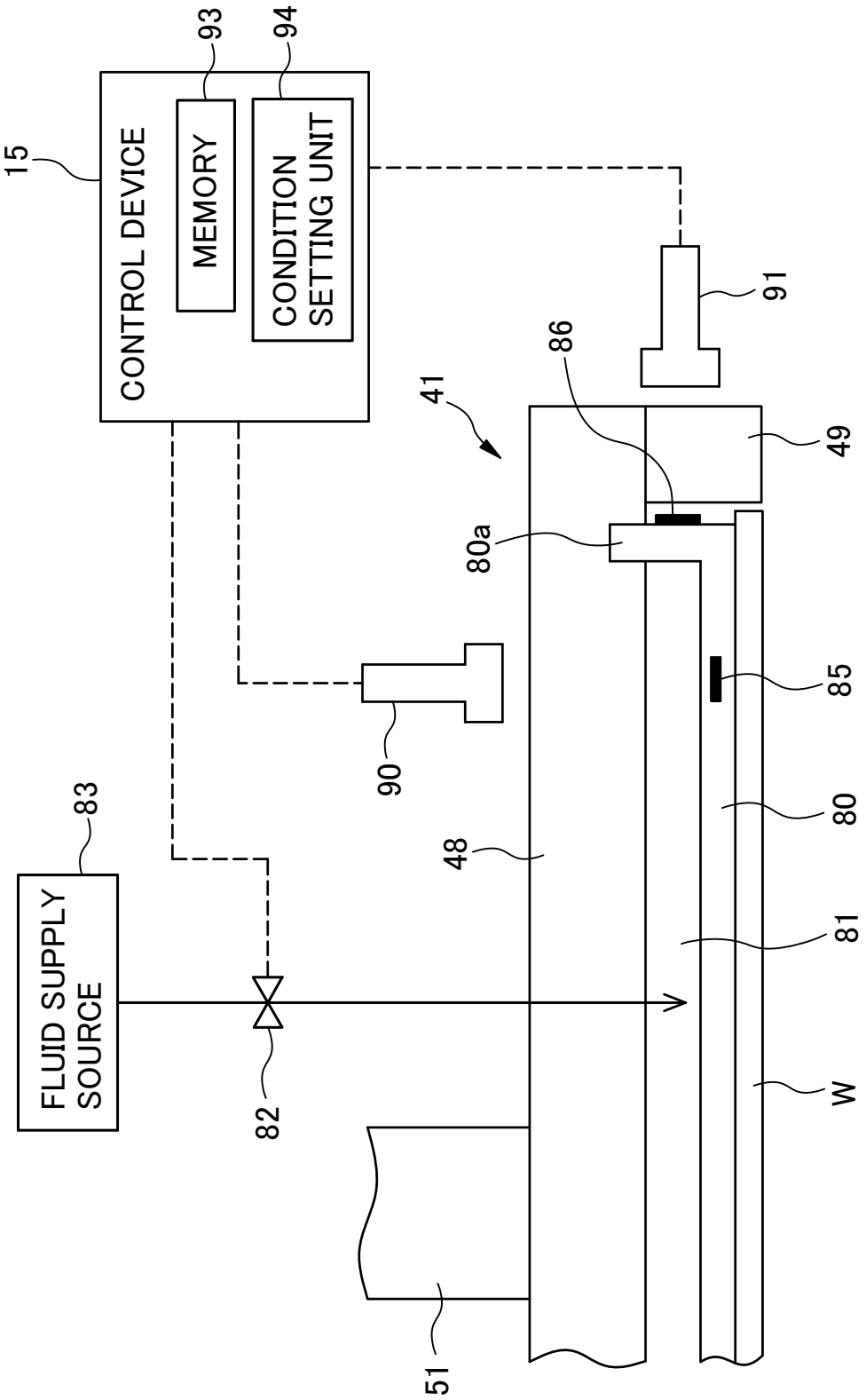
15
CONTROL DEVICE
MEMORY
CONDITION SETTING UNIT
93
94
91
86
41
49
80a
85
90
80
83
48
81
FLUID SUPPLY SOURCE
82
W
51

FIG.5

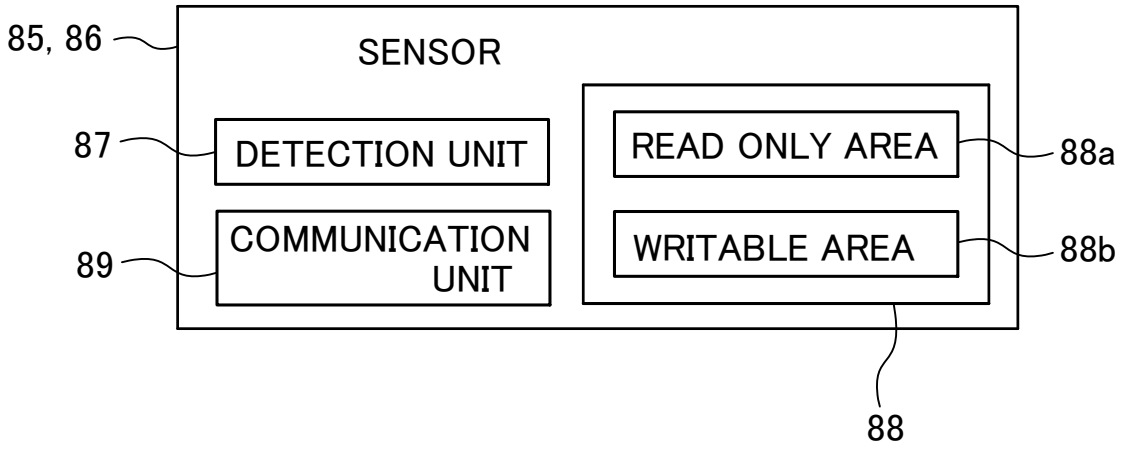
85, 86
SENSOR
87
DETECTION UNIT
89
COMMUNICATION UNIT
READ ONLY AREA
88a
WRITABLE AREA
88b
88

FIG.6

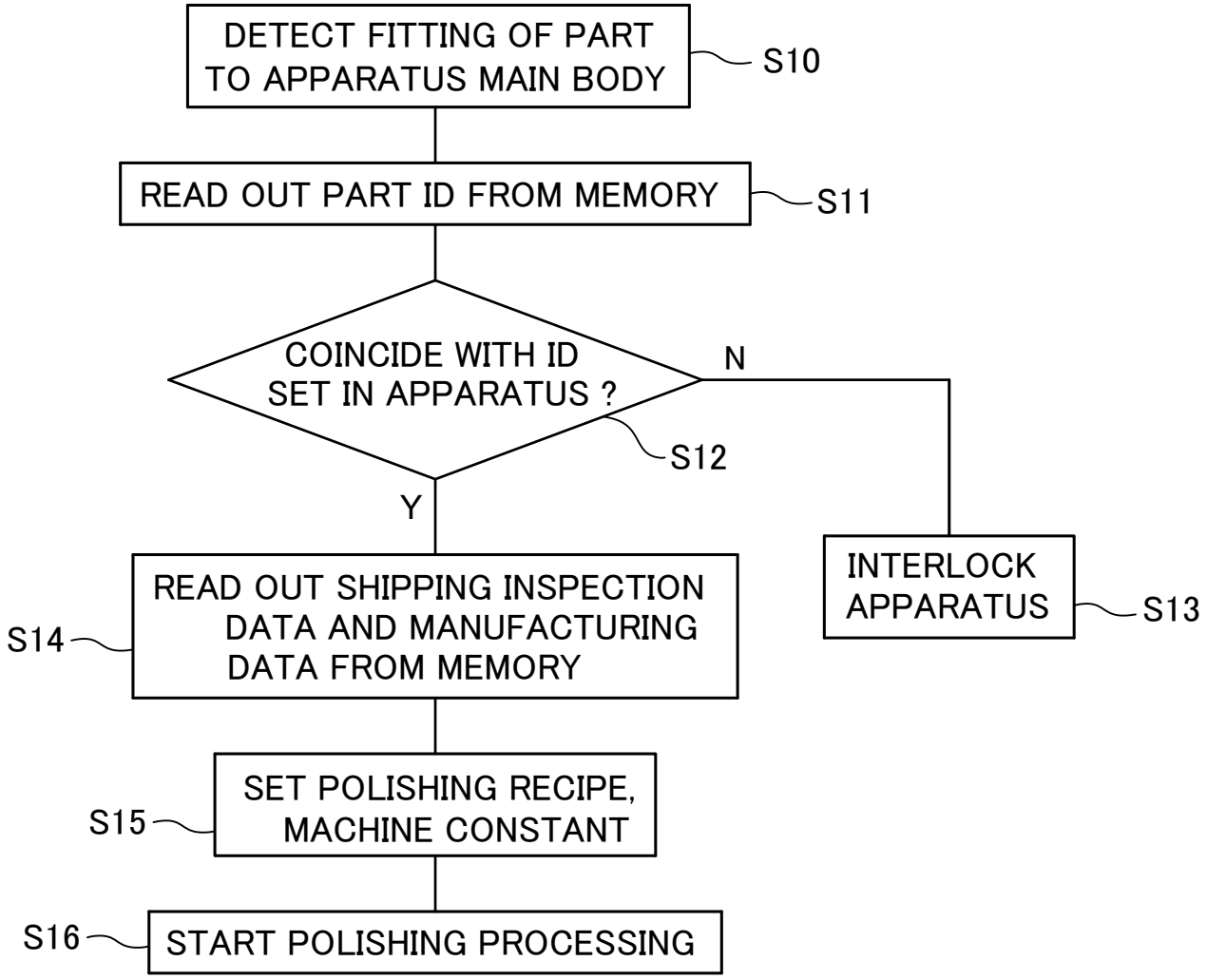
DETECT FITTING OF PART TO APPARATUS MAIN BODY
S10
READ OUT PART ID FROM MEMORY
S11
COINCIDE WITH ID SET IN APPARATUS ?
S12
N
Y
INTERLOCK APPARATUS
S13
READ OUT SHIPPING INSPECTION DATA AND MANUFACTURING DATA FROM MEMORY
S14
SET POLISHING RECIPE, MACHINE CONSTANT
S15
START POLISHING PROCESSING
S16

FIG.7

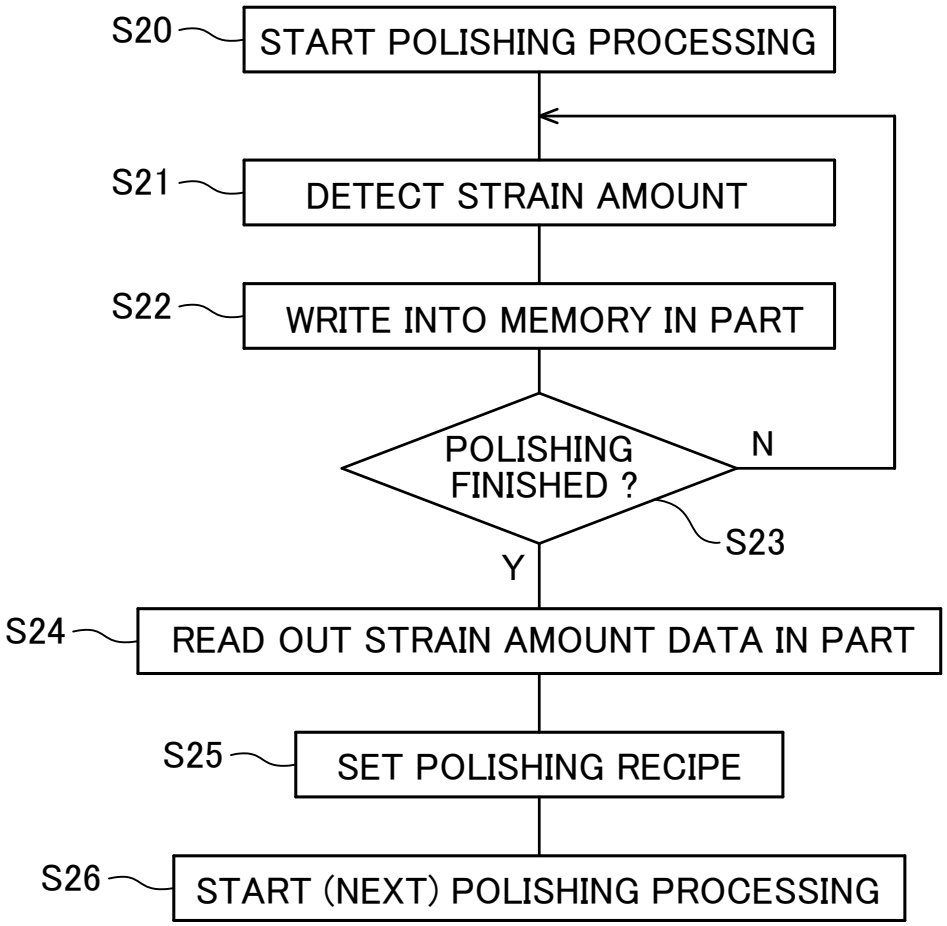
S20
START POLISHING PROCESSING
S21
DETECT STRAIN AMOUNT
S22
WRITE INTO MEMORY IN PART
POLISHING FINISHED ?
N
S23
Y
S24
READ OUT STRAIN AMOUNT DATA IN PART
S25
SET POLISHING RECIPE
S26
START (NEXT) POLISHING PROCESSING

FIG.8

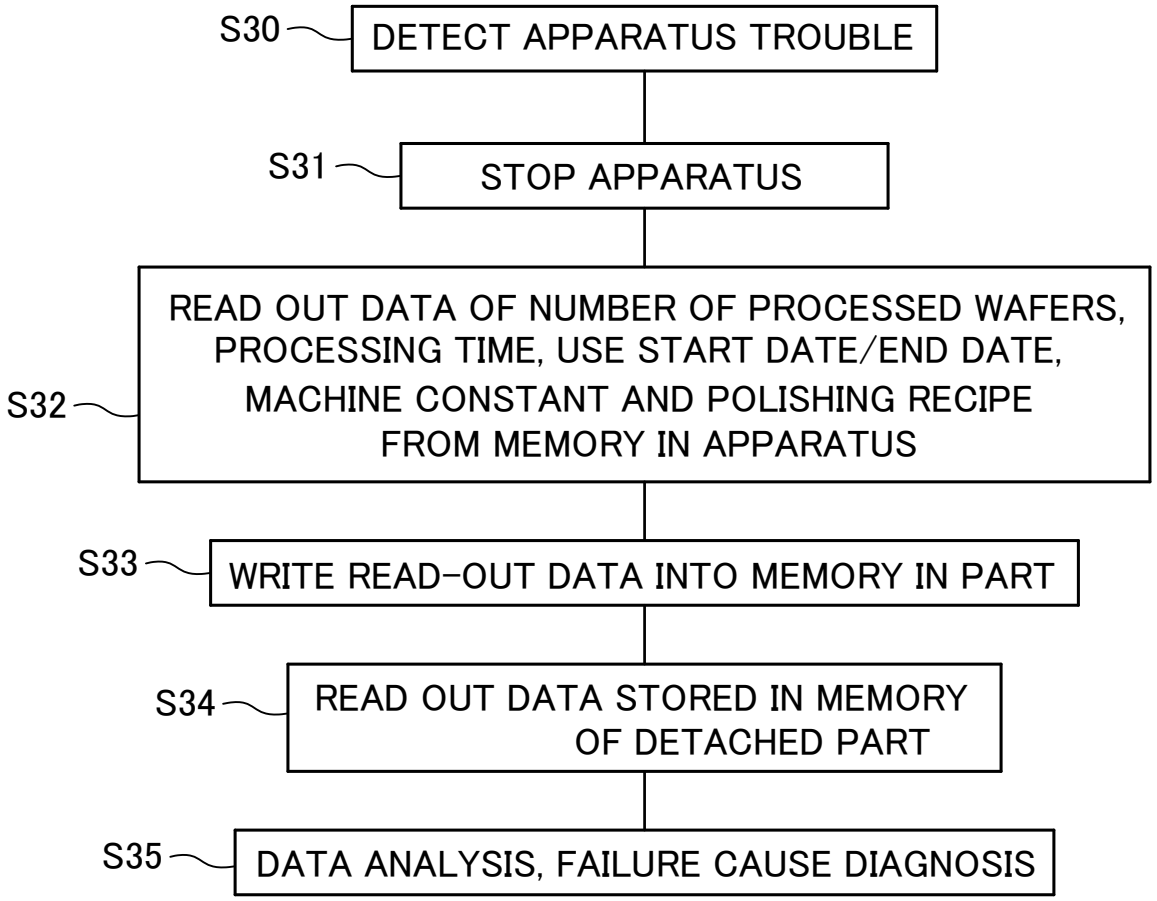
S30
DETECT APPARATUS TROUBLE
S31
STOP APPARATUS
S32
READ OUT DATA OF NUMBER OF PROCESSED WAFERS, PROCESSING TIME, USE START DATE/END DATE, MACHINE CONSTANT AND POLISHING RECIPE FROM MEMORY IN APPARATUS
S33
WRITE READ-OUT DATA INTO MEMORY IN PART
S34
READ OUT DATA STORED IN MEMORY OF DETACHED PART
S35
DATA ANALYSIS, FAILURE CAUSE DIAGNOSIS

FIG.9

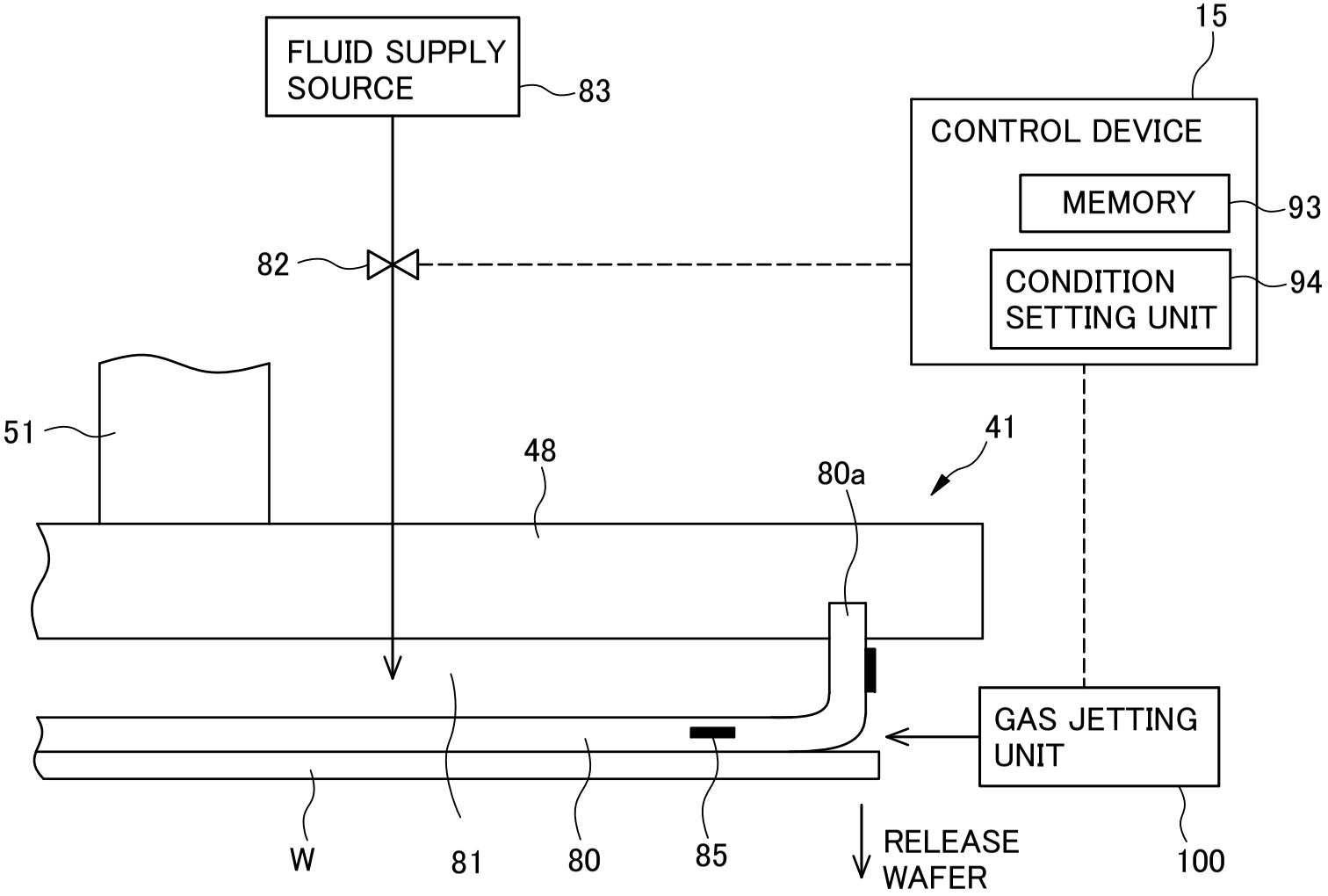
FLUID SUPPLY SOURCE
83
15
CONTROL DEVICE
MEMORY
93
CONDITION SETTING UNIT
94
82
51
48
41
80a
GAS JETTING UNIT
W
81
80
85
RELEASE WAFER
100

FIG.10

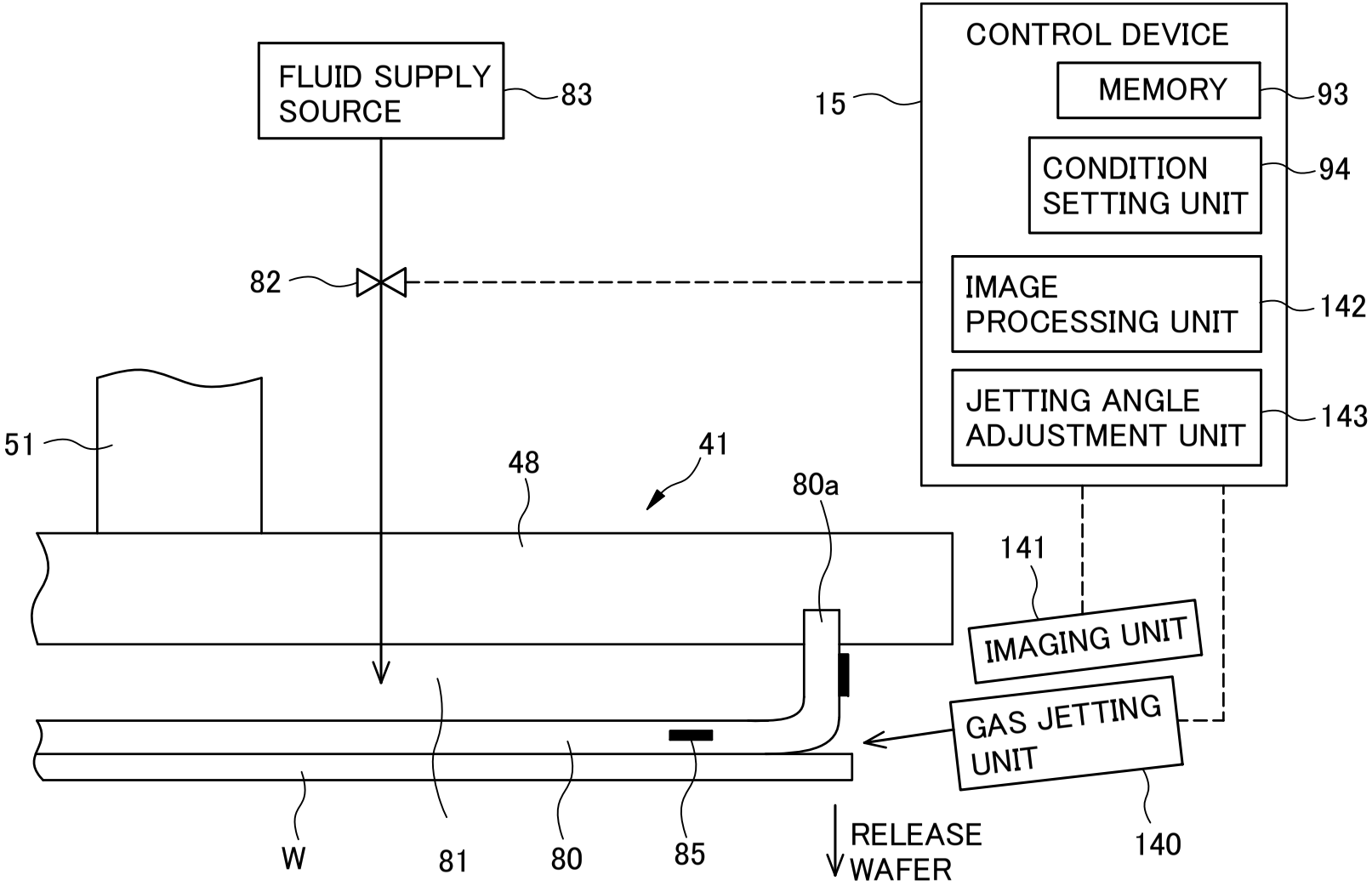
FLUID SUPPLY SOURCE
83
82
15
CONTROL DEVICE
MEMORY
93
CONDITION SETTING UNIT
94
IMAGE PROCESSING UNIT
142
JETTING ANGLE ADJUSTMENT UNIT
143
51
48
41
80a
141
IMAGING UNIT
GAS JETTING UNIT
140
W
81
80
85
RELEASE WAFER

FIG.11

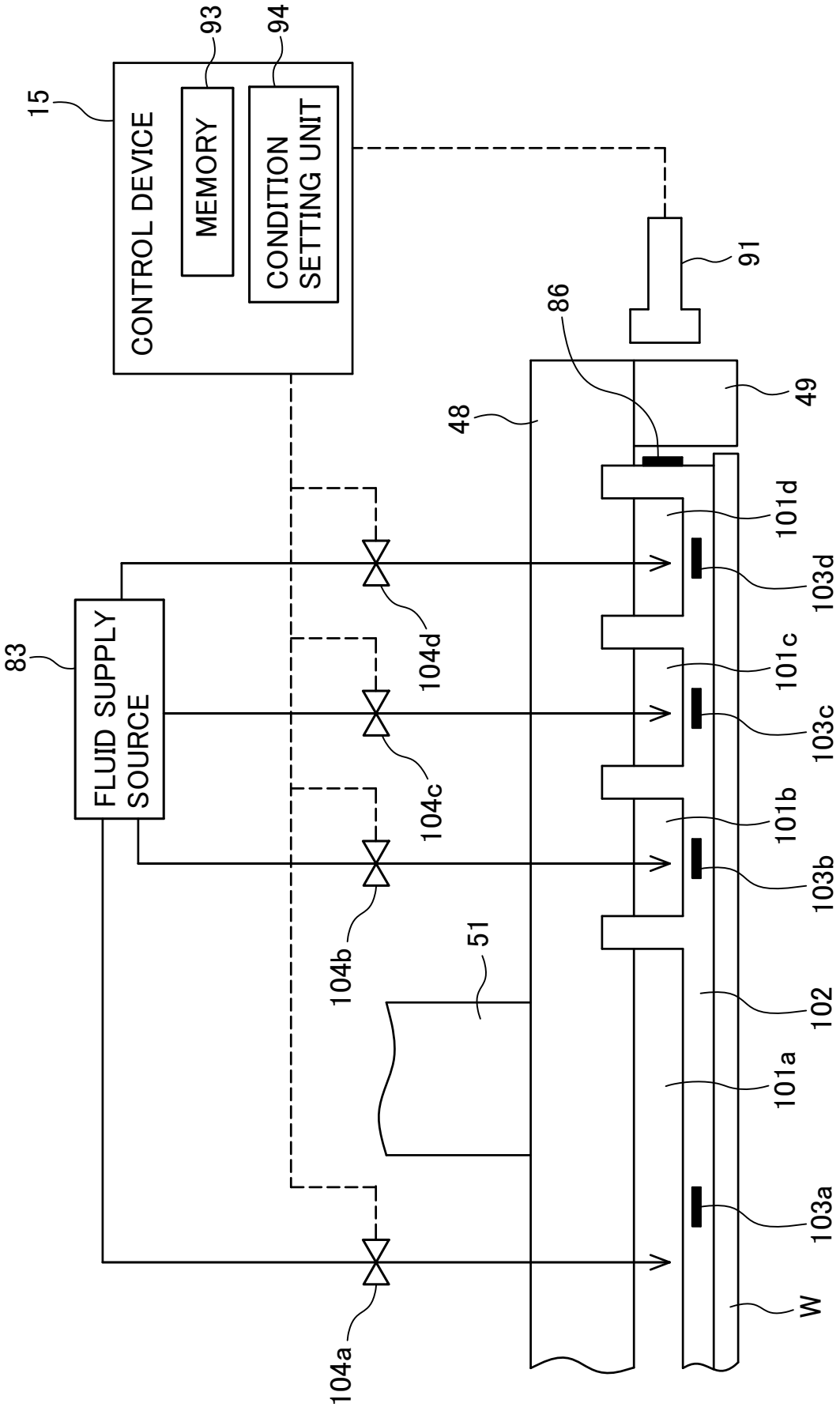
15
CONTROL DEVICE
MEMORY
93
CONDITION SETTING UNIT
94
91
86
48
49
83
FLUID SUPPLY SOURCE
104d
104c
104b
104a
51
101d
103d
101c
103c
101b
103b
102
101a
103a
W

FIG.12

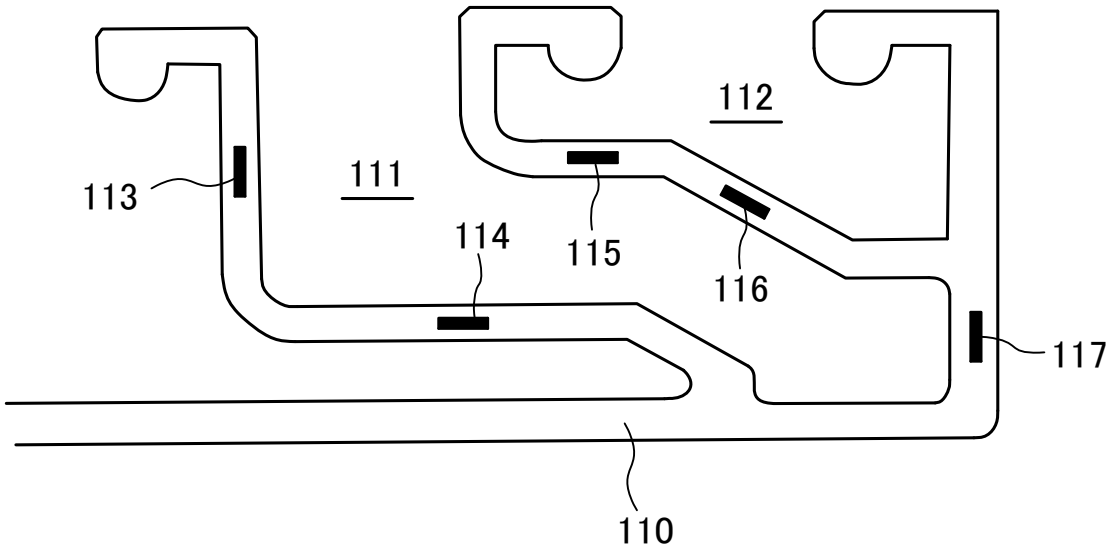

FIG.13

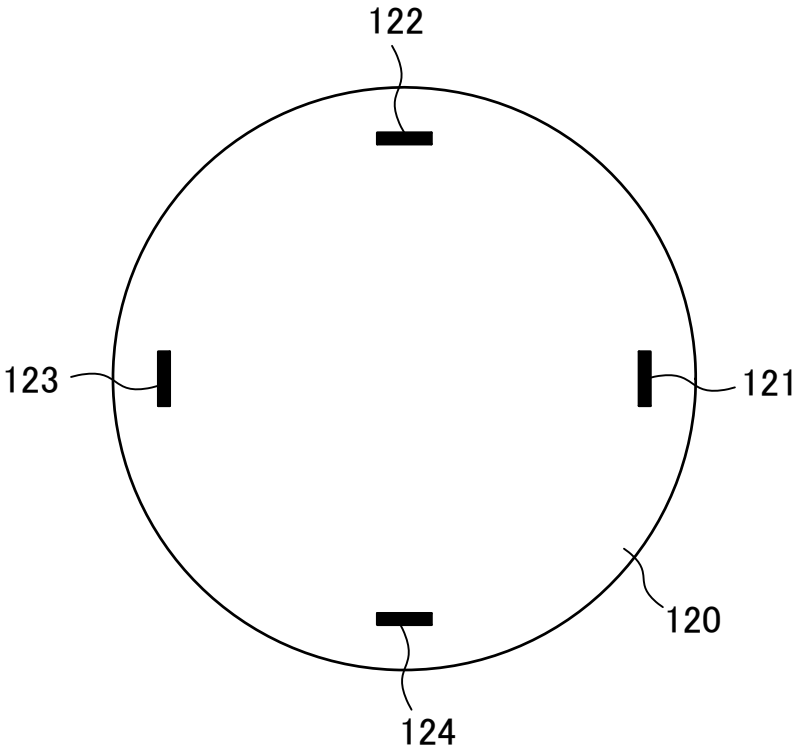

FIG.14

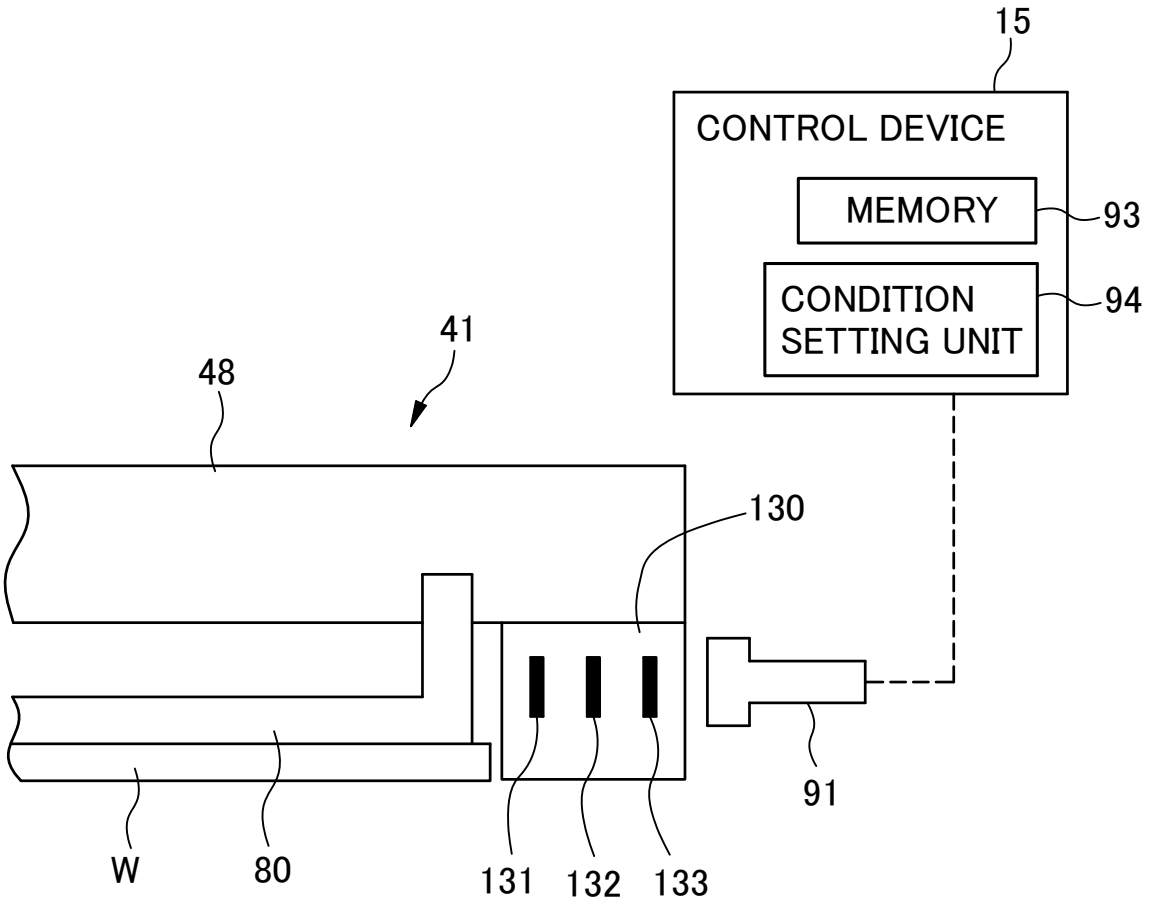
15
CONTROL DEVICE
MEMORY
93
CONDITION SETTING UNIT
94
41
48
130
91
W
80
131
132
133
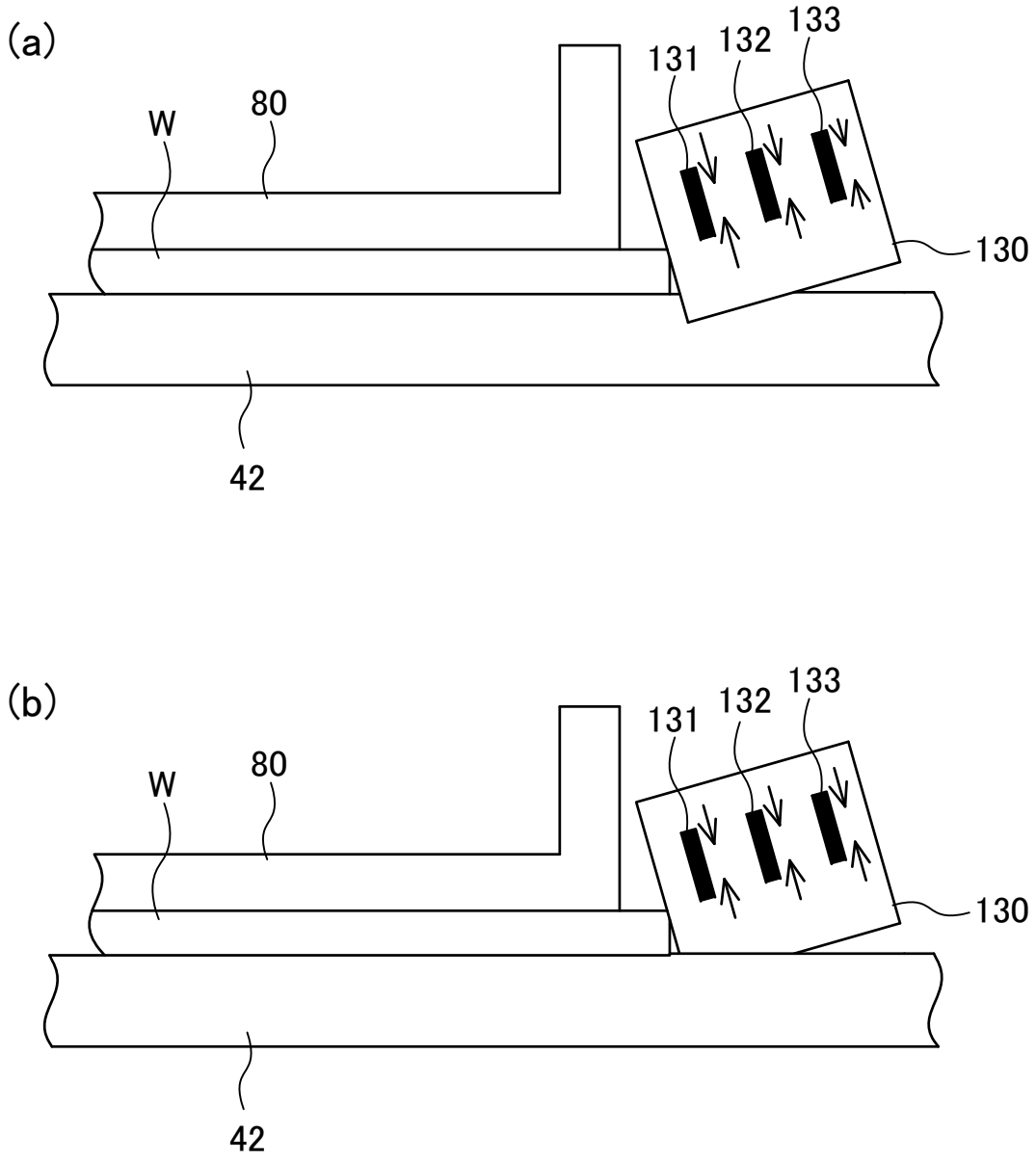
FIG.15