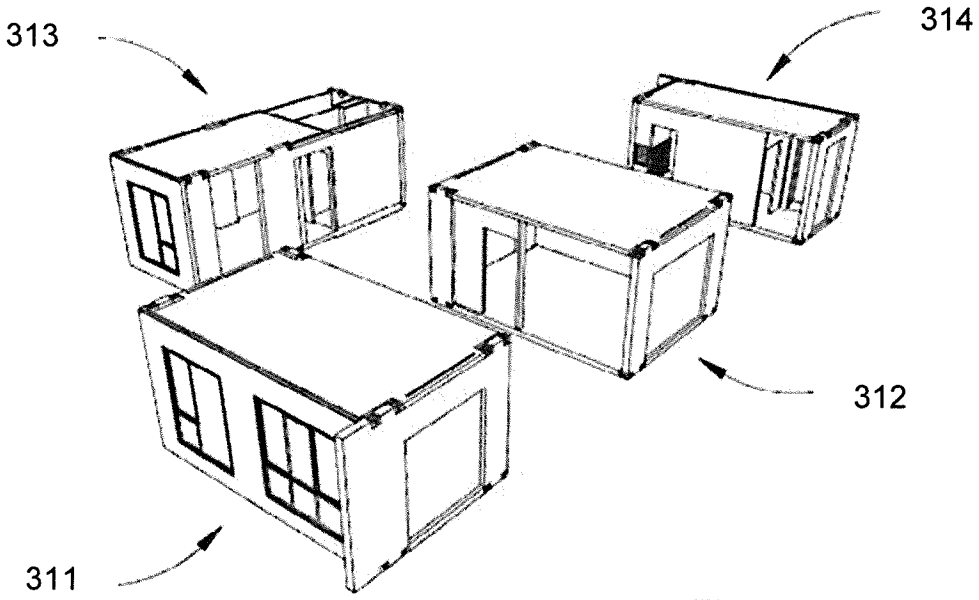

Figure 26

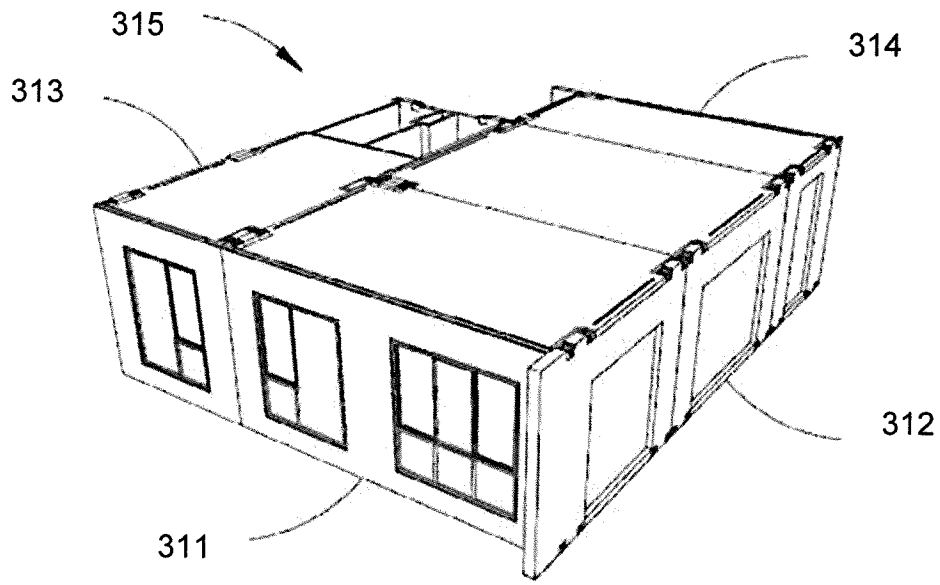

Figure 27

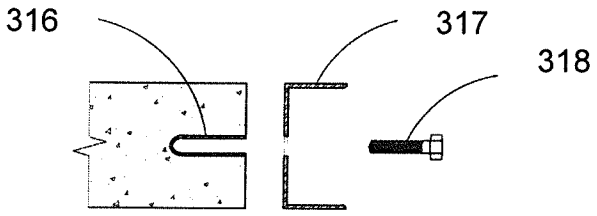

Figure 28A

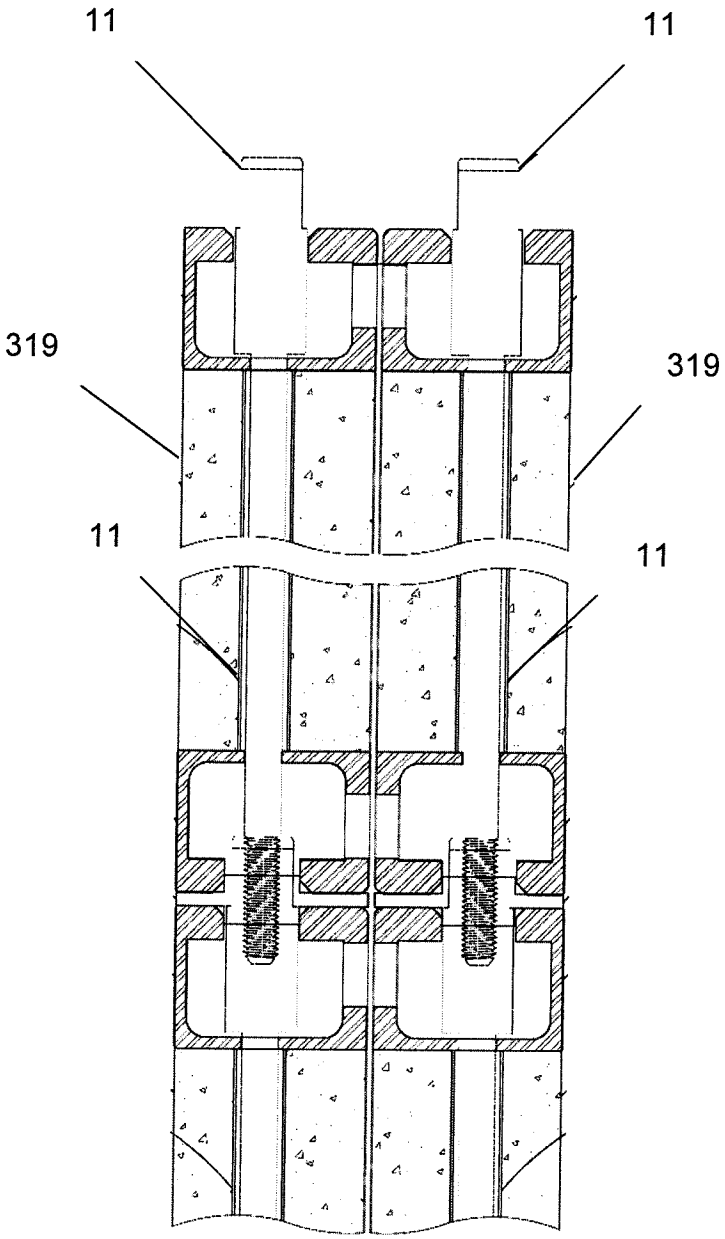

Figure 28B

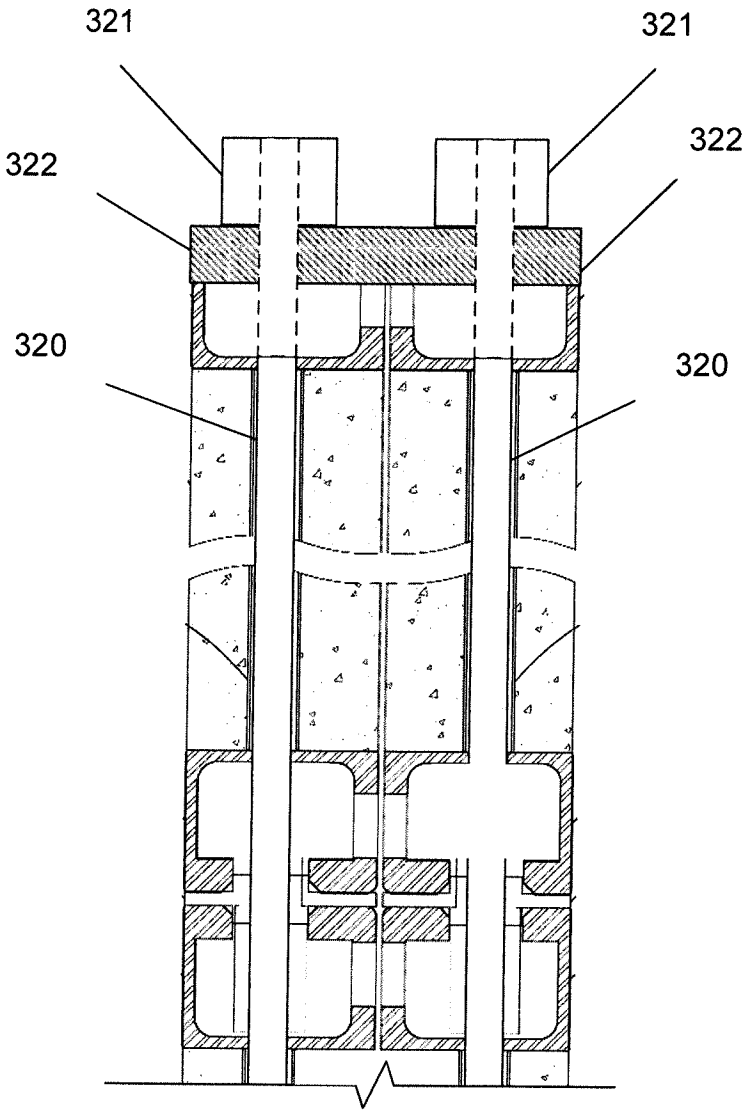

Figure 29