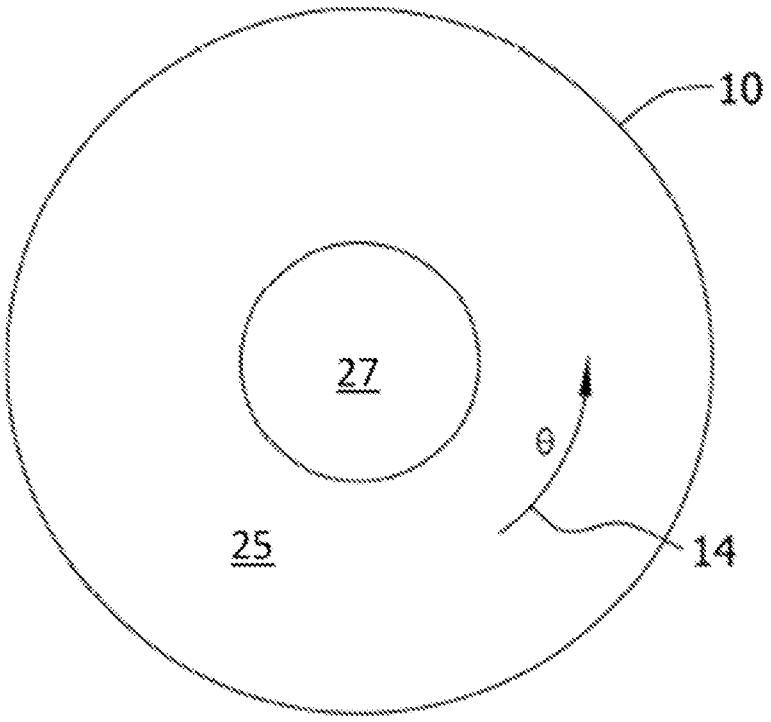

FIG. 1

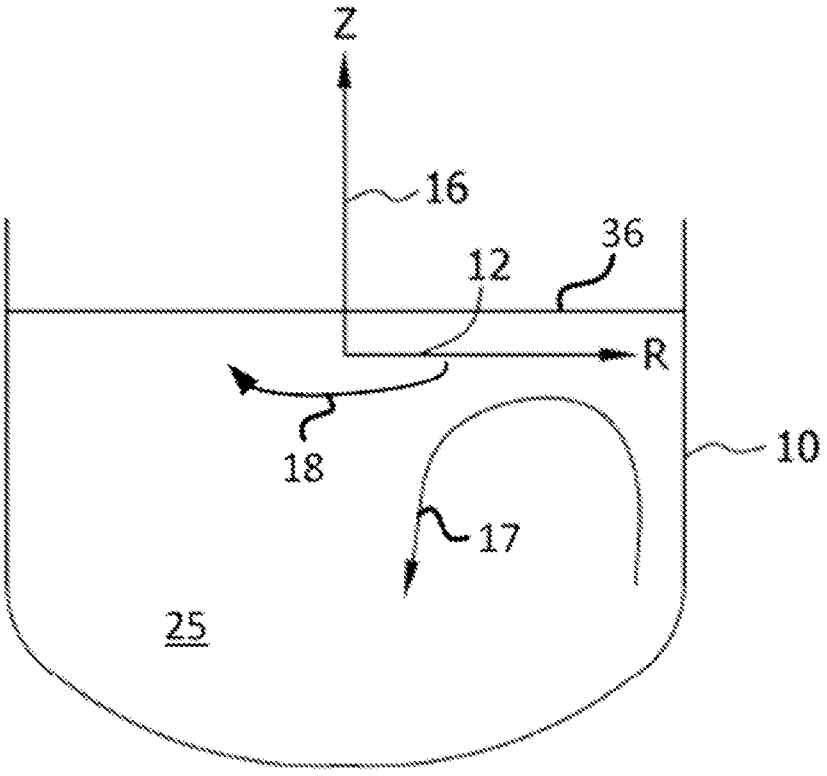

FIG. 2

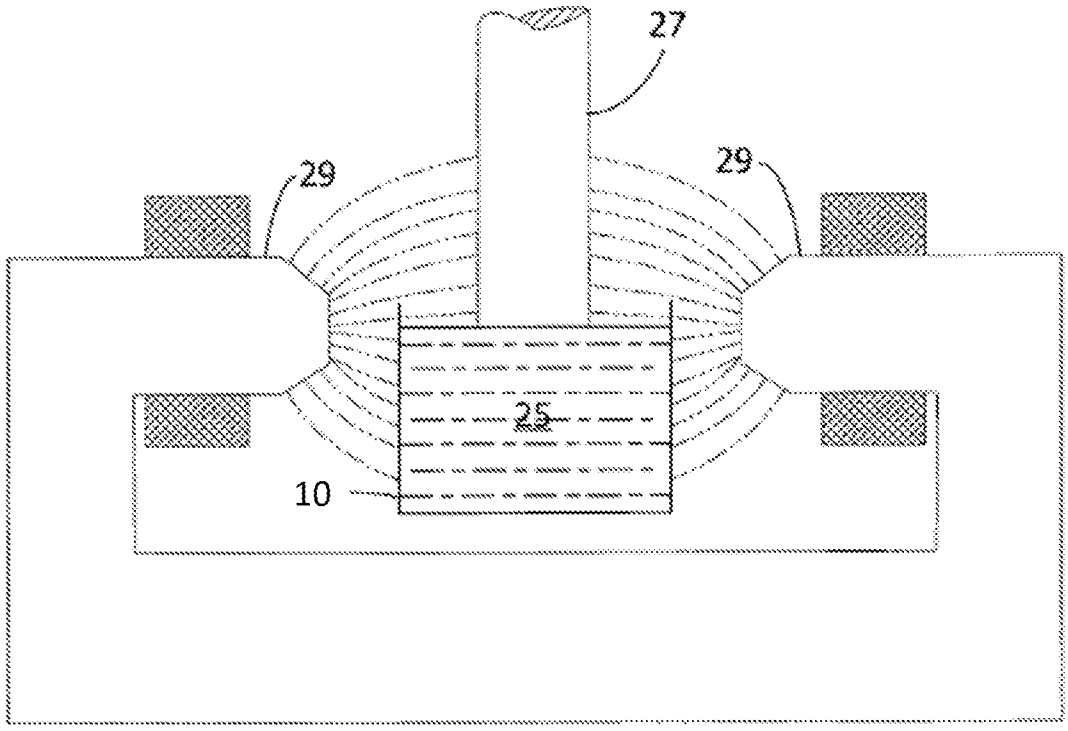

FIG. 3

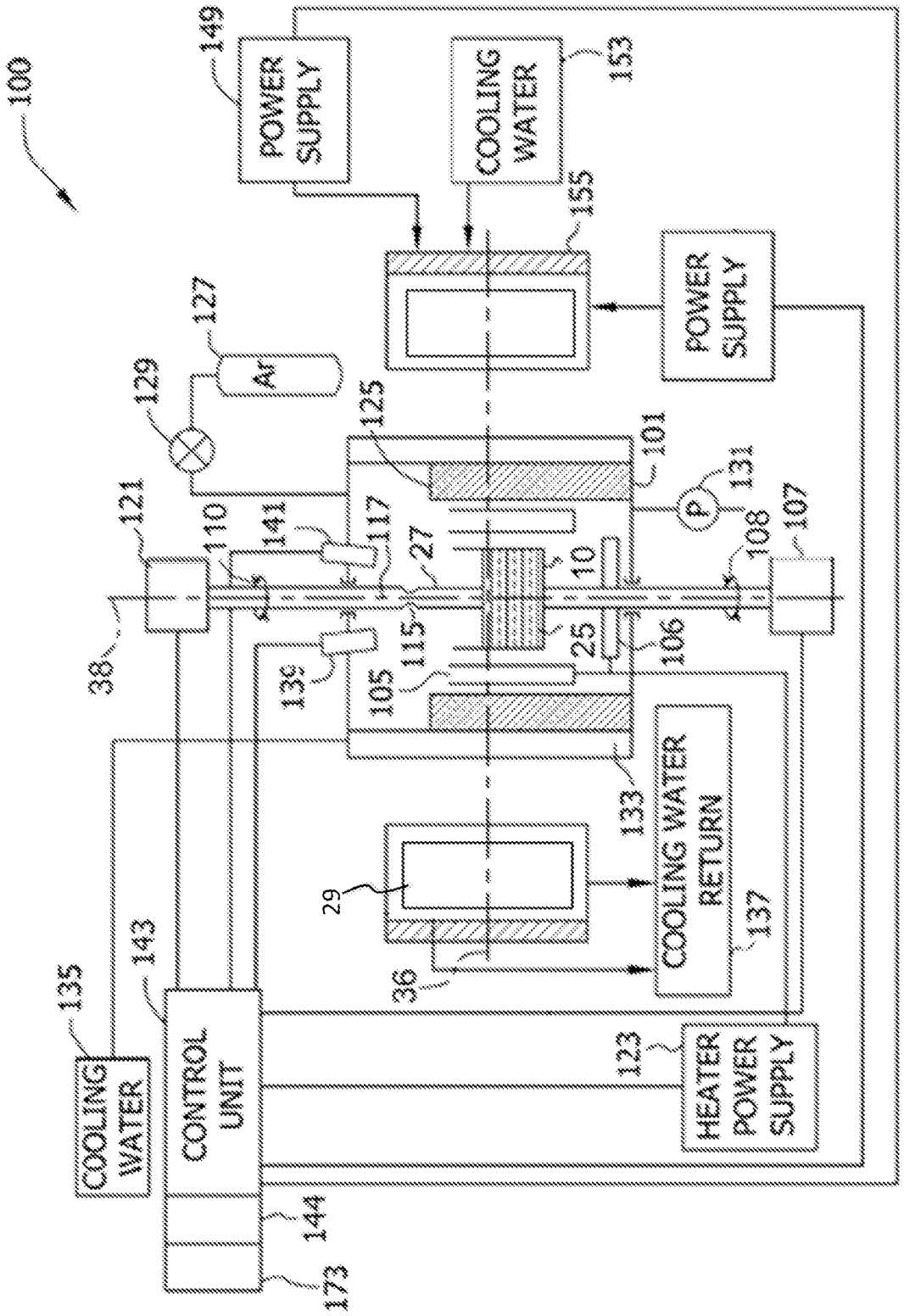
100
149
POWER SUPPLY
COOLING WATER
153
155
POWER SUPPLY
127
Ar
129
125
101
131
P
121
110
141
117
27
10
108
107
38
115
25
106
139
105
133
COOLING WATER RETURN
137
29
36
143
135
COOLING WATER
CONTROL UNIT
123
HEATER POWER SUPPLY
144
173

FIG. 4

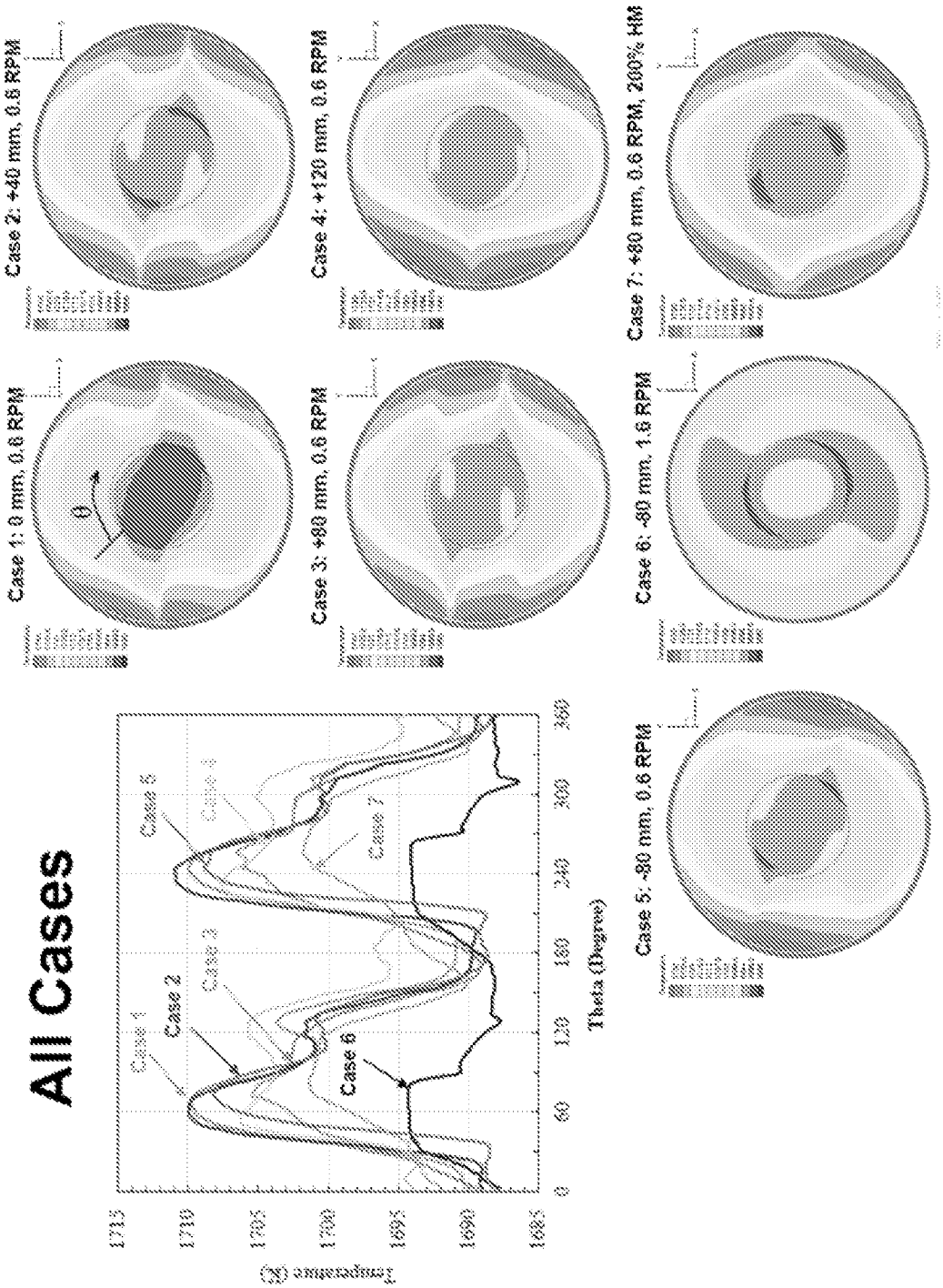
All Cases
Case 1
Case 2
Case 3
Case 4
Case 5
Case 6
Case 7
Temperature (K)
Theta (Degree)
1715
1710
1705
1700
1695
1690
1685
0
60
120
180
240
300
360
Case 1: 0 mm, 0.6 RPM
Case 2: +40 mm, 0.6 RPM
Case 3: +80 mm, 0.6 RPM
Case 4: +120 mm, 0.6 RPM
Case 5: -80 mm, 0.6 RPM
Case 6: -80 mm, 1.6 RPM
Case 7: +80 mm, 0.6 RPM, 200% HM
θ

FIG. 5

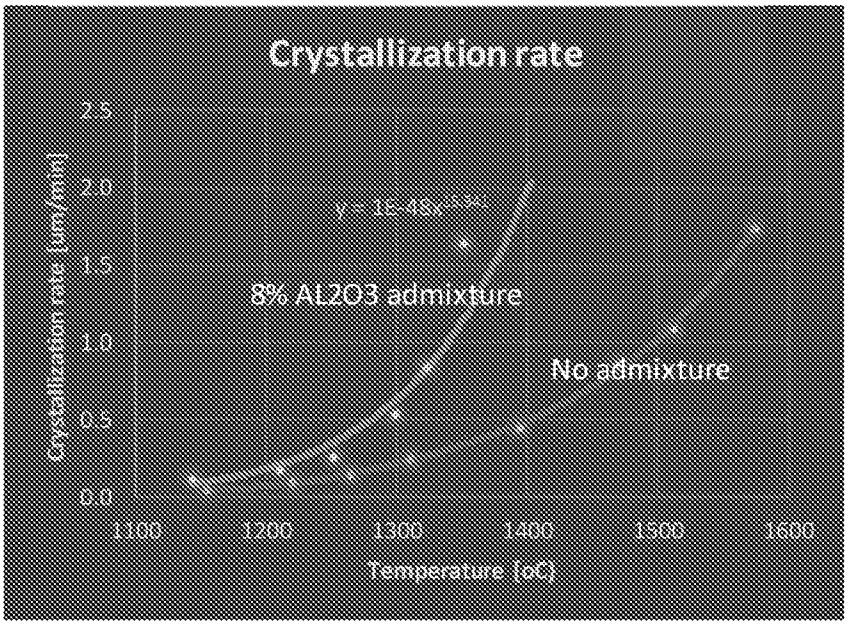
Crystallization rate
Crystallization rate [um/min]
2.5
2.0
1.5
1.0
0.5
0.0
y = 15.48x^-0.94
8% AL2O3 admixture
No admixture
1100
1200
1300
1400
1900
1600
Temperature [oC]

FIG. 6

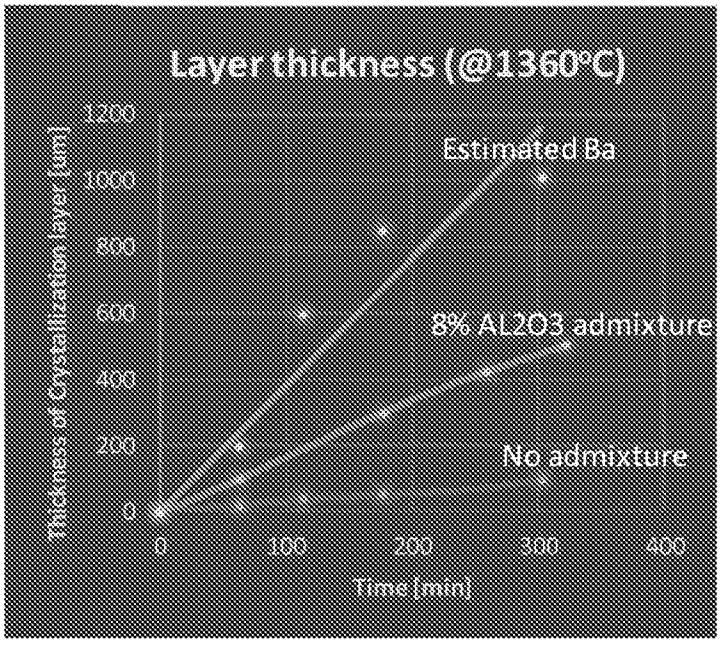
Layer thickness (@1360°C)
Thickness of Crystallization layer [um]
1200
1000
800
600
400
200
0
Estimated Ba
8% AL2O3 admixture
No admixture
0
100
200
300
400
Time [min]

FIG. 7

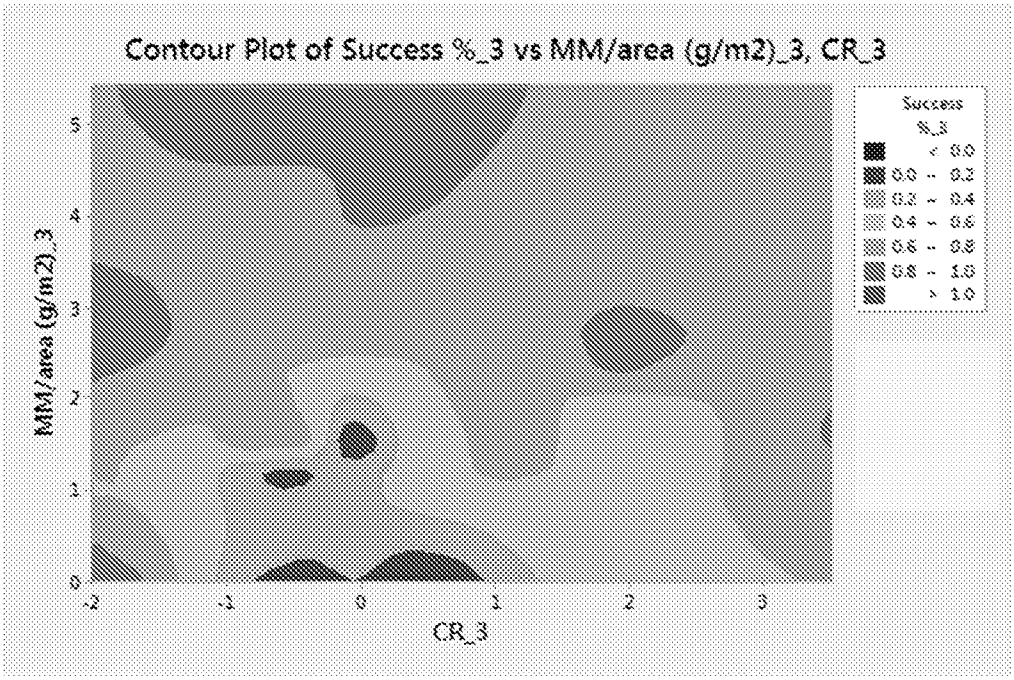
Contour Plot of Success %_3 vs MM/area (g/m2)_3, CR_3
MM/area (g/m2)_3
CR_3
Success %_3
< 0.0
0.0 – 0.2
0.2 – 0.4
0.4 – 0.6
0.6 – 0.8
0.8 – 1.0
> 1.0

FIG. 8