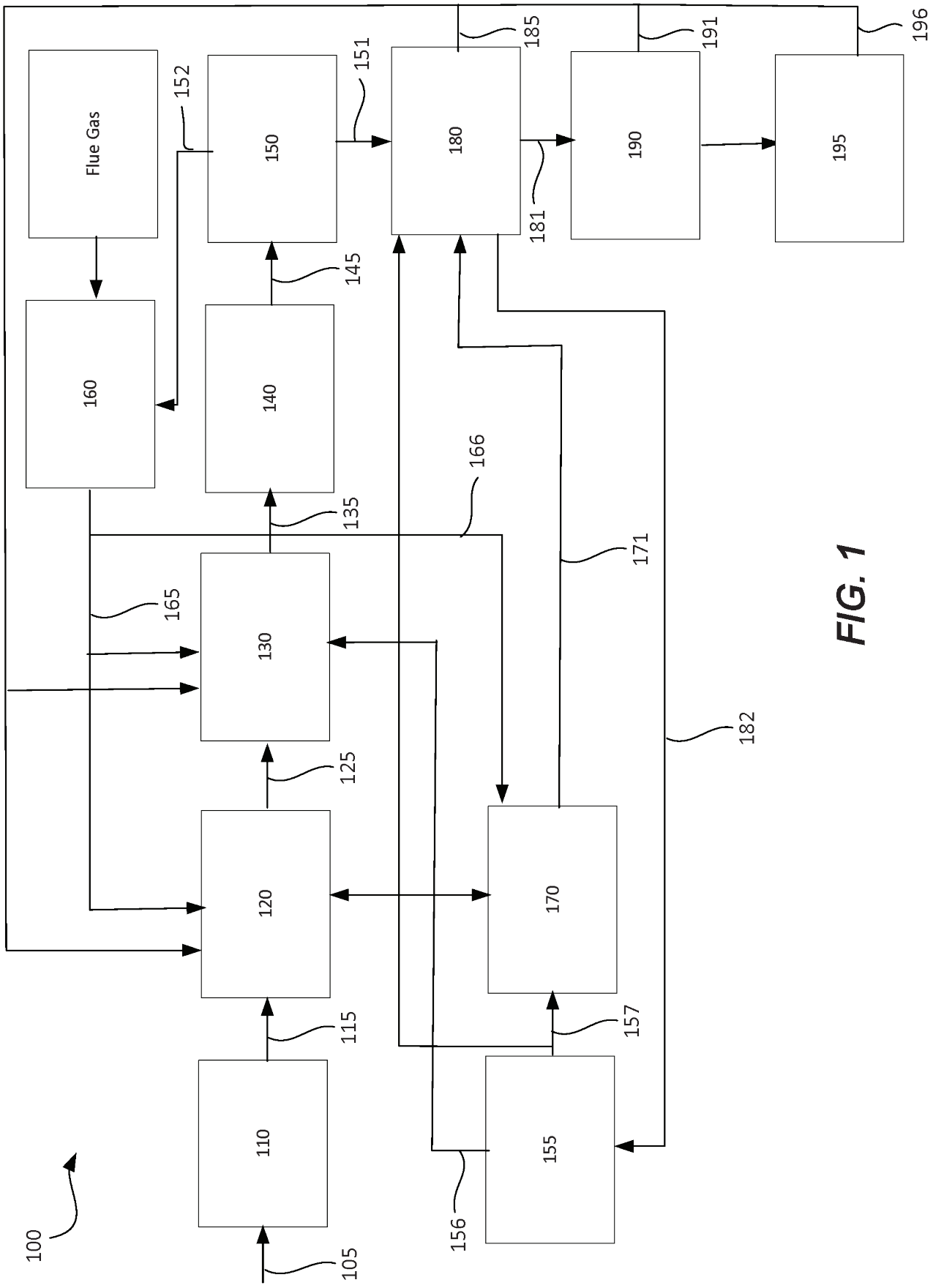
Flue Gas
150
180
190
195
160
140
130
120
170
110
155
100
105
115
125
135
140
145
151
152
156
157
165
166
171
181
182
185
191
196

FIG. 1

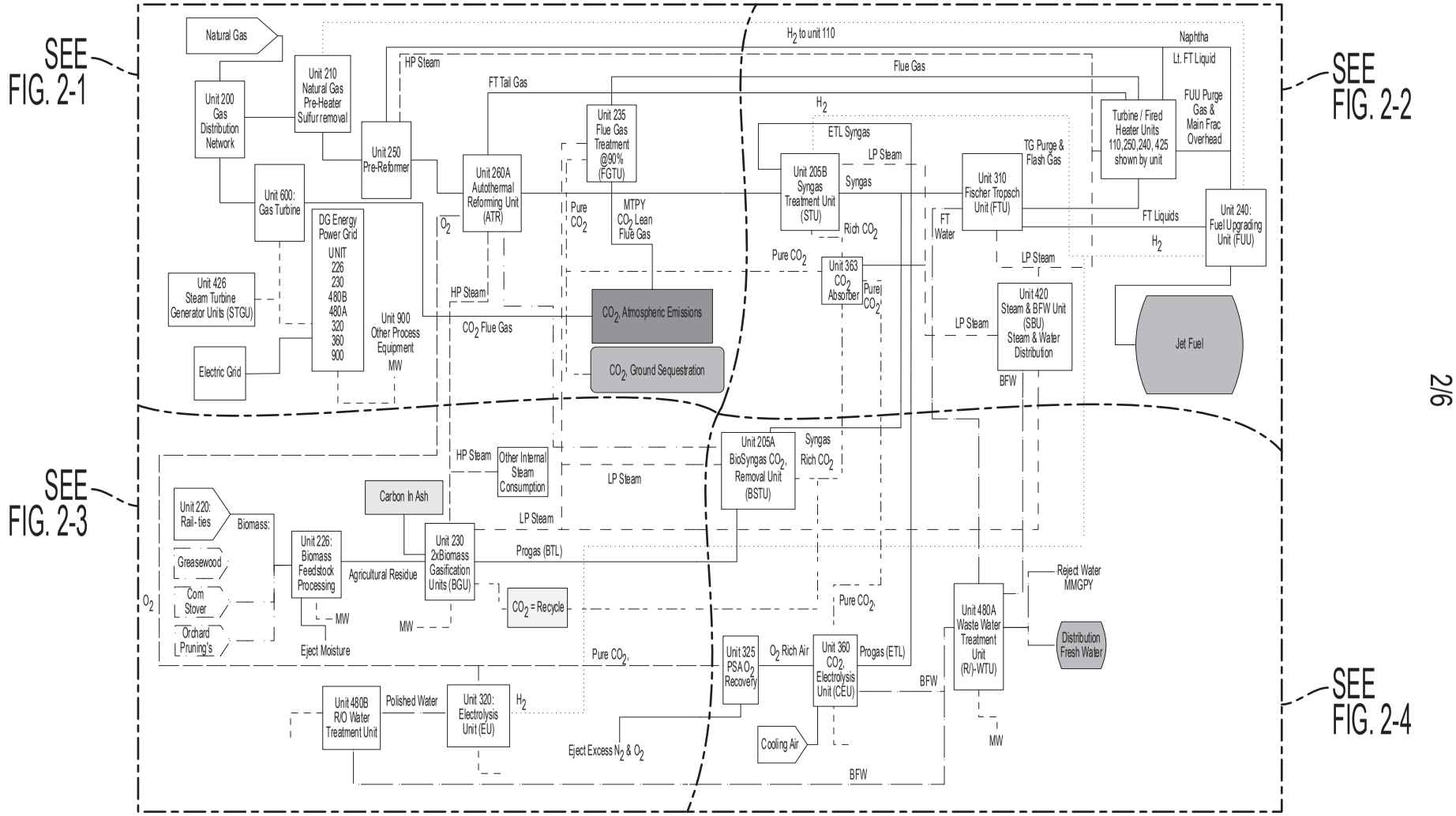
SEE FIG. 2-1
SEE FIG. 2-2
SEE FIG. 2-3
SEE FIG. 2-4
Natural Gas
Unit 200 Gas Distribution Network
Unit 210 Natural Gas Pre-Heater Sulfur removal
Unit 250 Pre-Reformer
Unit 260A Autothermal Reforming Unit (ATR)
Unit 235 Flue Gas Treatment @90% (FGTU)
Unit 600: Gas Turbine
DG Energy Power Grid
UNIT 226 230 480B 480A 320 360 900
Unit 426 Steam Turbine Generator Units (STGU)
Electric Grid
Unit 900 Other Process Equipment
MW
HP Steam
FT Tail Gas
H_2 to unit 110
Flue Gas
Naphtha
Lt. FT Liquid
FUU Purge Gas & Main Frac Overhead
Turbine / Fired Heater Units 110,250,240, 425 shown by unit
H_2
ETL Syngas
LP Steam
Unit 205B Syngas Treatment Unit (STU)
Syngas
TG Purge & Flash Gas
Unit 310 Fischer Tropsch Unit (FTU)
FT Liquids
Unit 240: Fuel Upgrading Unit (FUU)
FT Water
Rich CO_2
Pure CO_2
MTPY CO_2 Lean Flue Gas
O_2
Pure CO_2
Unit 363 CO_2 Absorber
Pure CO_2
LP Steam
HP Steam
CO_2 Flue Gas
CO_2, Atmospheric Emissions
CO_2, Ground Sequestration
Unit 420 Steam & BFW Unit (SBU) Steam & Water Distribution
Jet Fuel
BFW
HP Steam
Other Internal Steam Consumption
LP Steam
Unit 205A BioSyngas CO_2 Removal Unit (BSTU)
Syngas
Rich CO_2
Carbon In Ash
LP Steam
Unit 220: Rail-ties
Biomass:
Greasewood
Corn Stover
Orchard Pruning's
Unit 226: Biomass Feedstock Processing
Agricultural Residue
Unit 230 2xBiomass Gasification Units (BGU)
Progas (BTL)
CO_2 = Recycle
O_2
MW
MW
Eject Moisture
Pure CO_2
Pure CO_2,
Unit 325 PSA O_2 Recovery
O_2 Rich Air
Unit 360 CO_2 Electrolysis Unit (CEU)
Progas (ETL)
Unit 480A Waste Water Treatment Unit (R/)-WTU)
Reject Water MMGPY
Distribution Fresh Water
BFW
MW
Unit 480B R/O Water Treatment Unit
Polished Water
Unit 320: Electrolysis Unit (EU)
H_2
Eject Excess N_2 & O_2
Cooling Air
BFW

FIG. 2

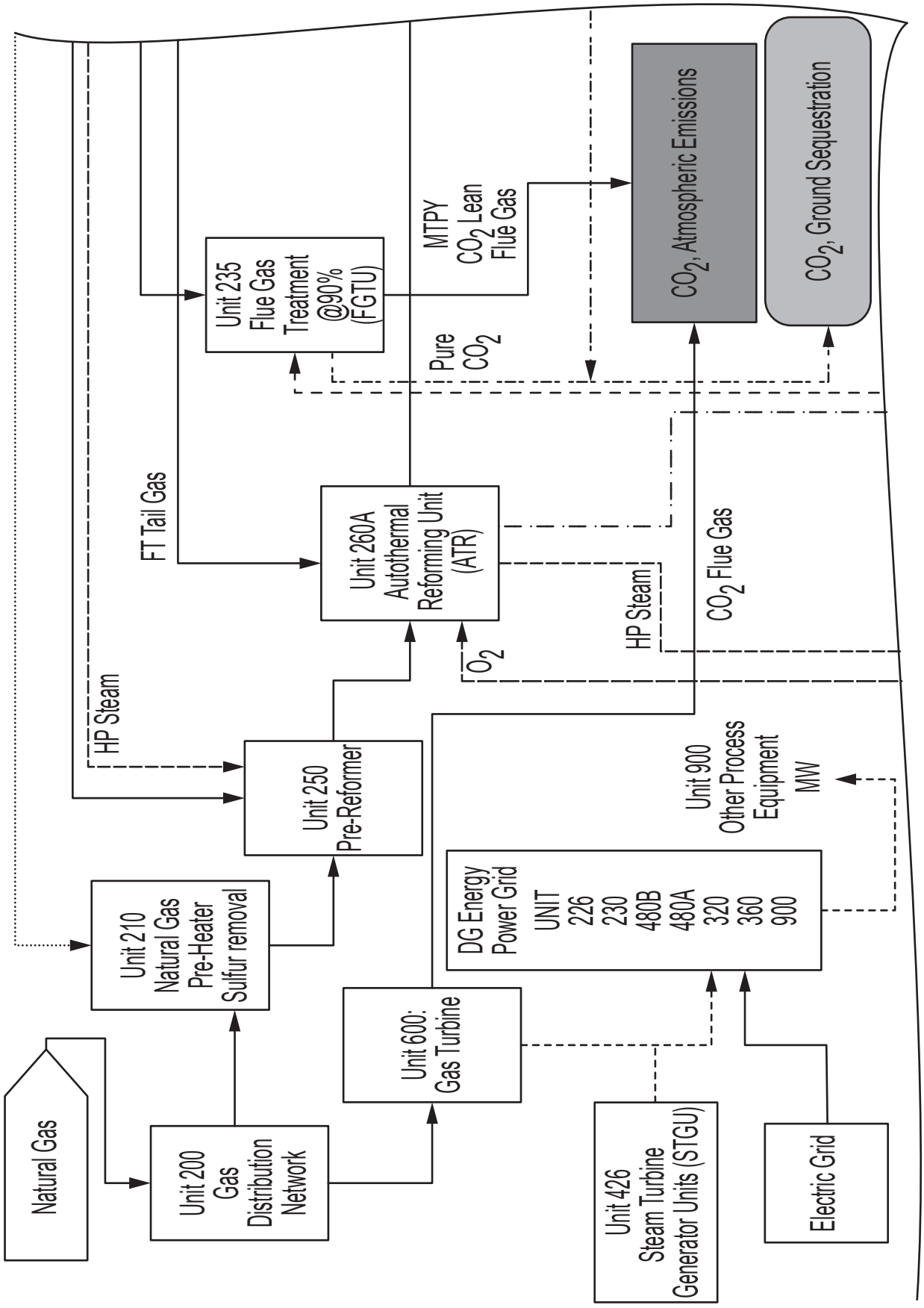
Natural Gas
Unit 200
Gas
Distribution
Network
Unit 210
Natural Gas
Pre-Heater
Sulfur removal
Unit 250
Pre-Reformer
Unit 600:
Gas Turbine
Unit 426
Steam Turbine
Generator Units (STGU)
Electric Grid
DG Energy
Power Grid
UNIT
226
230
480B
480A
320
360
900
Unit 900
Other Process
Equipment
MW
HP Steam
FT Tail Gas
Unit 260A
Autothermal
Reforming Unit
(ATR)
O_2
HP Steam
CO_2 Flue Gas
Unit 235
Flue Gas
Treatment
@90%
(FGTU)
Pure
CO_2
MTPY
CO_2 Lean
Flue Gas
CO_2, Atmospheric Emissions
CO_2, Ground Sequestration

FIG. 2-1

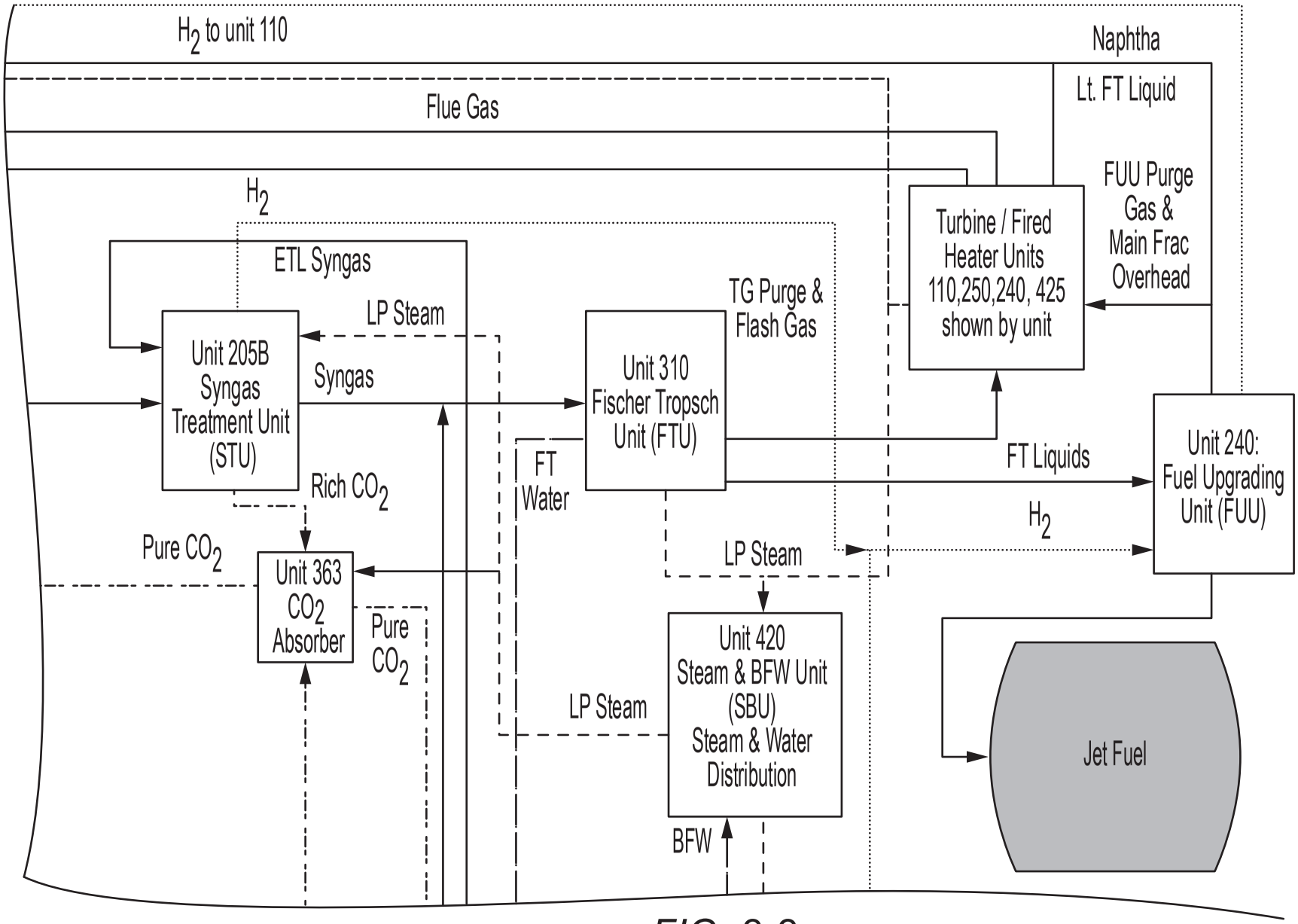
H_2 to unit 110
Naphtha
Lt. FT Liquid
Flue Gas
FUU Purge Gas & Main Frac Overhead
H_2
Turbine / Fired Heater Units 110,250,240, 425 shown by unit
ETL Syngas
TG Purge & Flash Gas
LP Steam
Unit 205B Syngas Treatment Unit (STU)
Syngas
Unit 310 Fischer Tropsch Unit (FTU)
Unit 240: Fuel Upgrading Unit (FUU)
FT Liquids
FT Water
Rich CO_2
H_2
Pure CO_2
LP Steam
Unit 363 CO_2 Absorber
Pure CO_2
Unit 420 Steam & BFW Unit (SBU) Steam & Water Distribution
LP Steam
Jet Fuel
BFW

FIG. 2-2

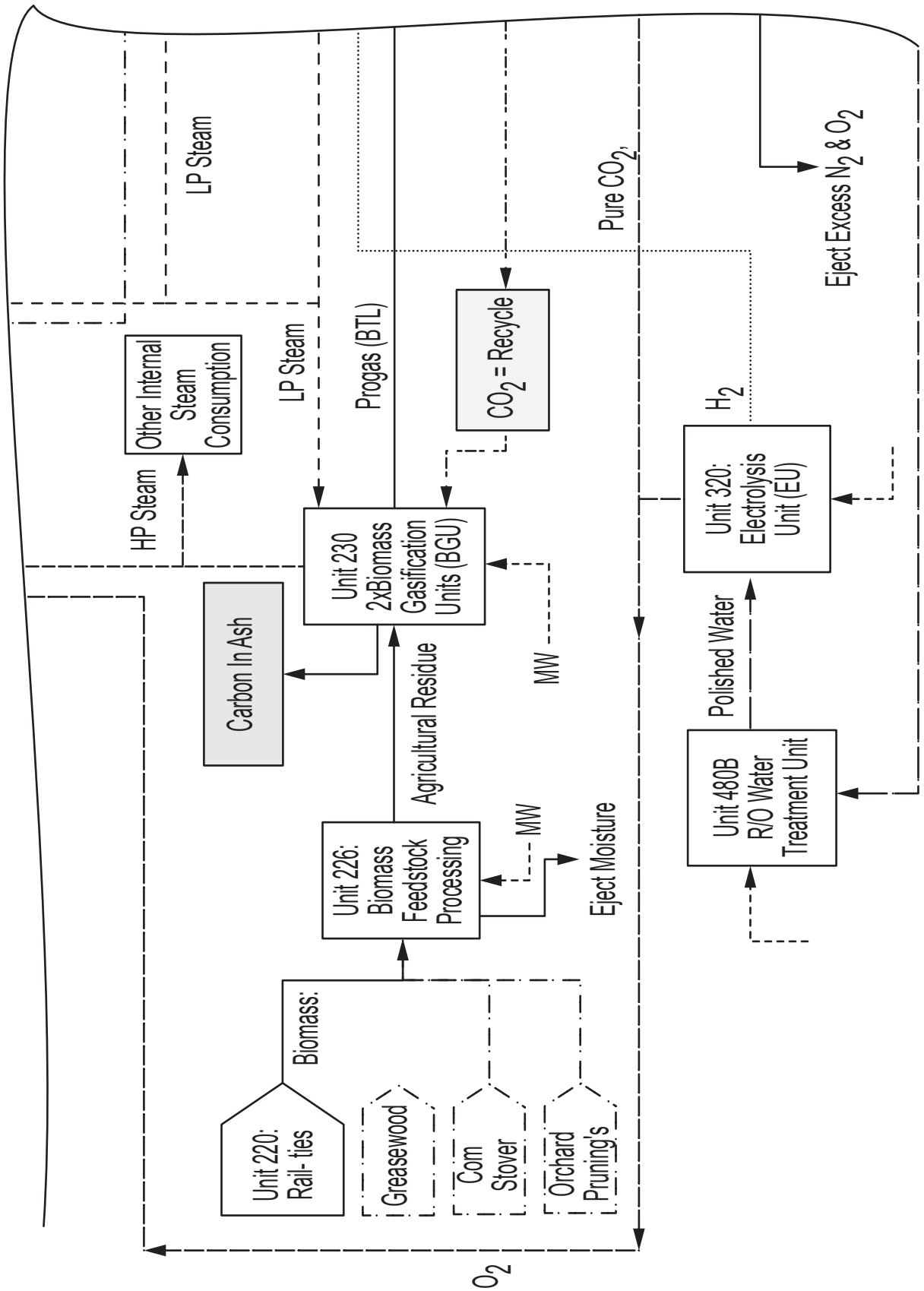
Unit 220: Rail- ties
Biomass:
Greasewood
Corn Stover
Orchard Pruning's
Unit 226: Biomass Feedstock Processing
MW
Eject Moisture
Agricultural Residue
Carbon In Ash
Unit 230 2xBiomass Gasification Units (BGU)
MW
HP Steam
Other Internal Steam Consumption
LP Steam
LP Steam
Progas (BTL)
CO_2 = Recycle
Pure CO_2,
H_2
Unit 320: Electrolysis Unit (EU)
Polished Water
Unit 480B R/O Water Treatment Unit
Eject Excess N_2 & O_2
O_2

FIG. 2-3

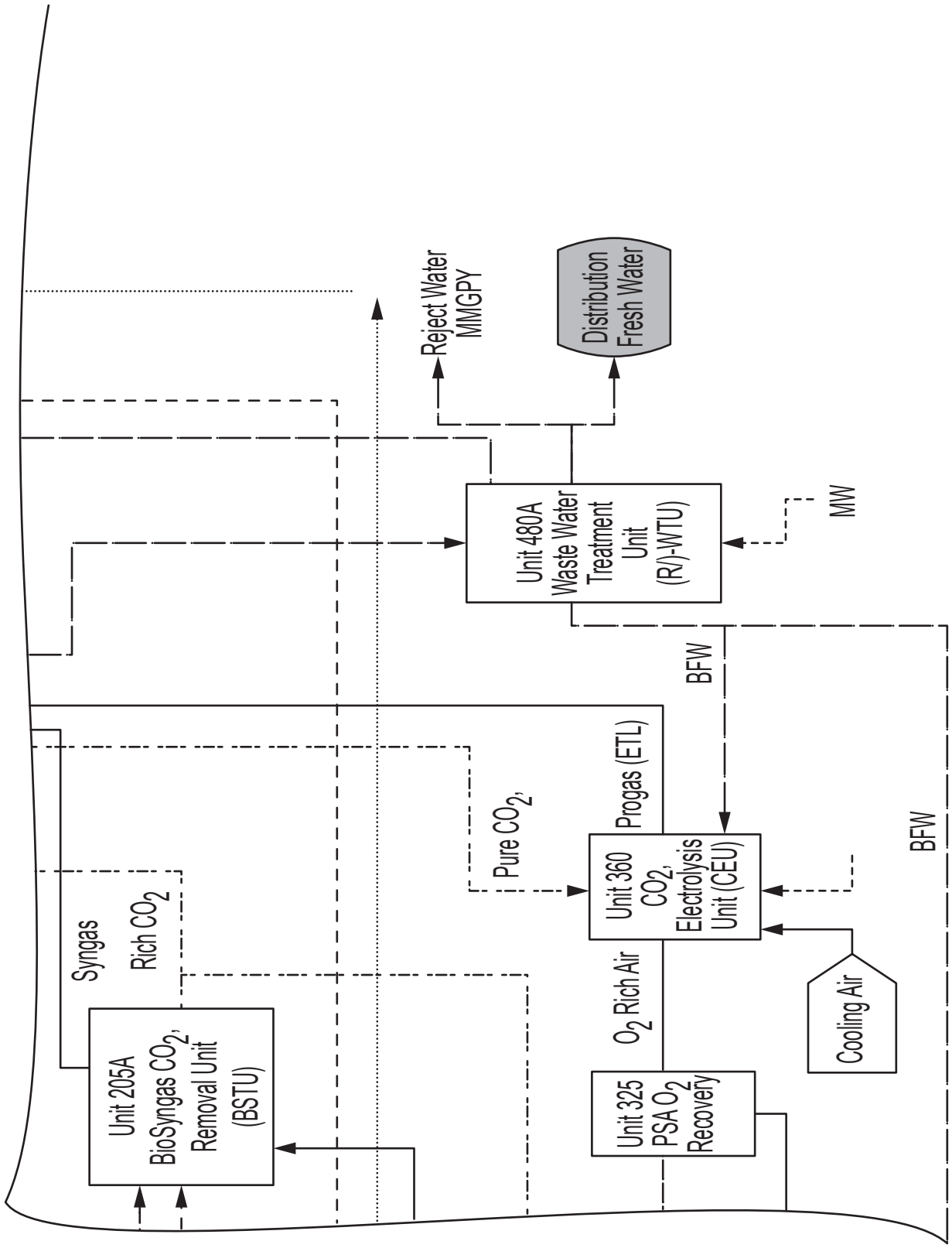
Reject Water MMGPY
Distribution Fresh Water
Unit 480A Waste Water Treatment Unit (R/)-WTU)
MW
BFW
Progas (ETL)
Pure CO_2,
Unit 360 CO_2, Electrolysis Unit (CEU)
BFW
Syngas
Rich CO_2
O_2 Rich Air
Cooling Air
Unit 205A BioSyngas CO_2, Removal Unit (BSTU)
Unit 325 PSA O_2 Recovery

FIG. 2-4