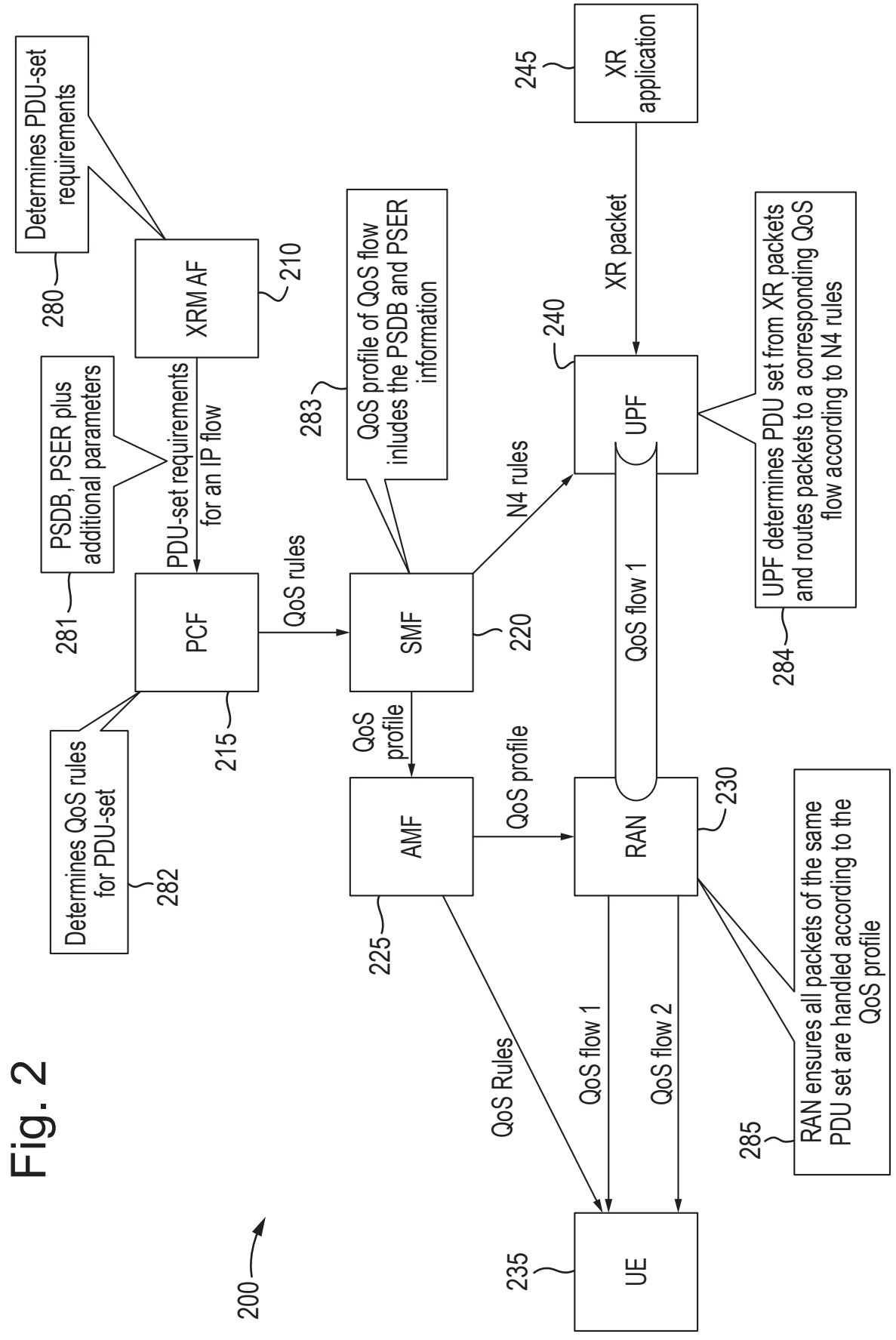
Determines PDU-set requirements
280
XRM AF
210
245
XR application
PSDB, PSER plus additional parameters
281
PDU-set requirements for an IP flow
283
QoS profile of QoS flow inludes the PSDB and PSER information
XR packet
240
UPF
PCF
QoS rules
SMF
220
N4 rules
UPF determines PDU set from XR packets and routes packets to a corresponding QoS flow according to N4 rules
284
Determines QoS rules for PDU-set
282
215
QoS profile
QoS flow 1
AMF
QoS profile
RAN
230
225
QoS Rules
QoS flow 1
QoS flow 2
RAN ensures all packets of the same PDU set are handled according to the QoS profile
285
UE
235
200

Fig. 2

Fig. 6

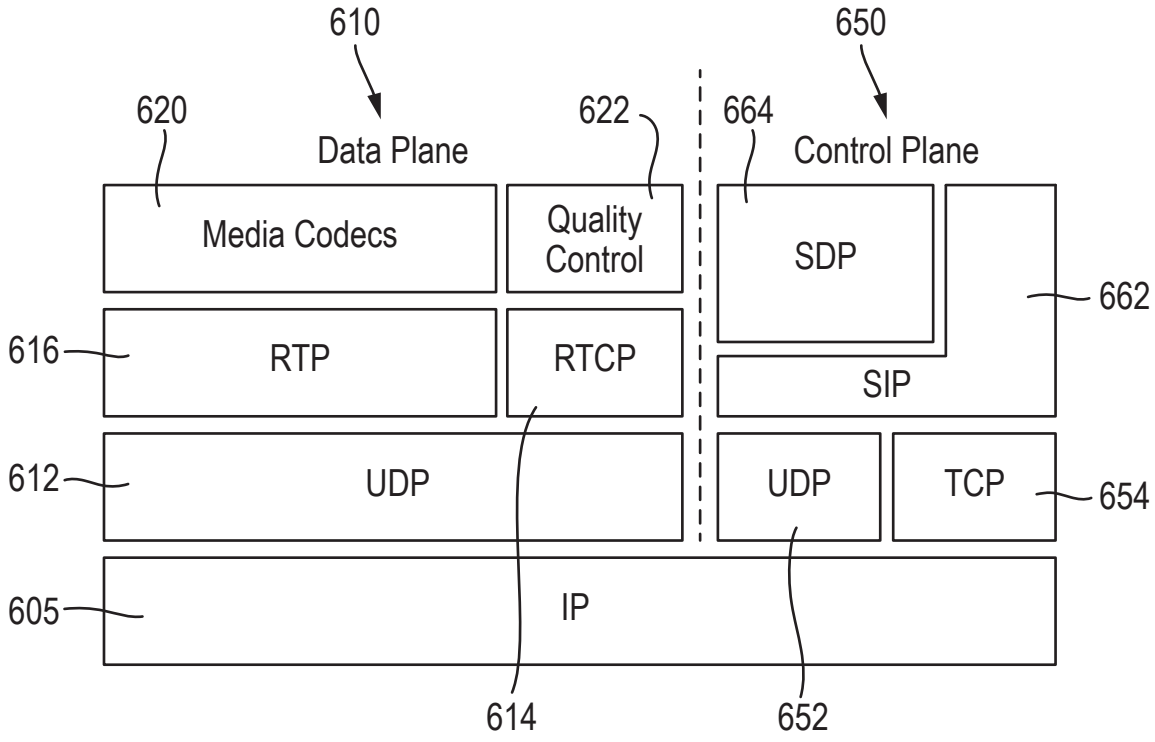
610
650
620
Data Plane
622
664
Control Plane
Media Codecs
Quality Control
SDP
662
616
RTP
RTCP
SIP
612
UDP
UDP
TCP
654
605
IP
614
652

Fig. 7a

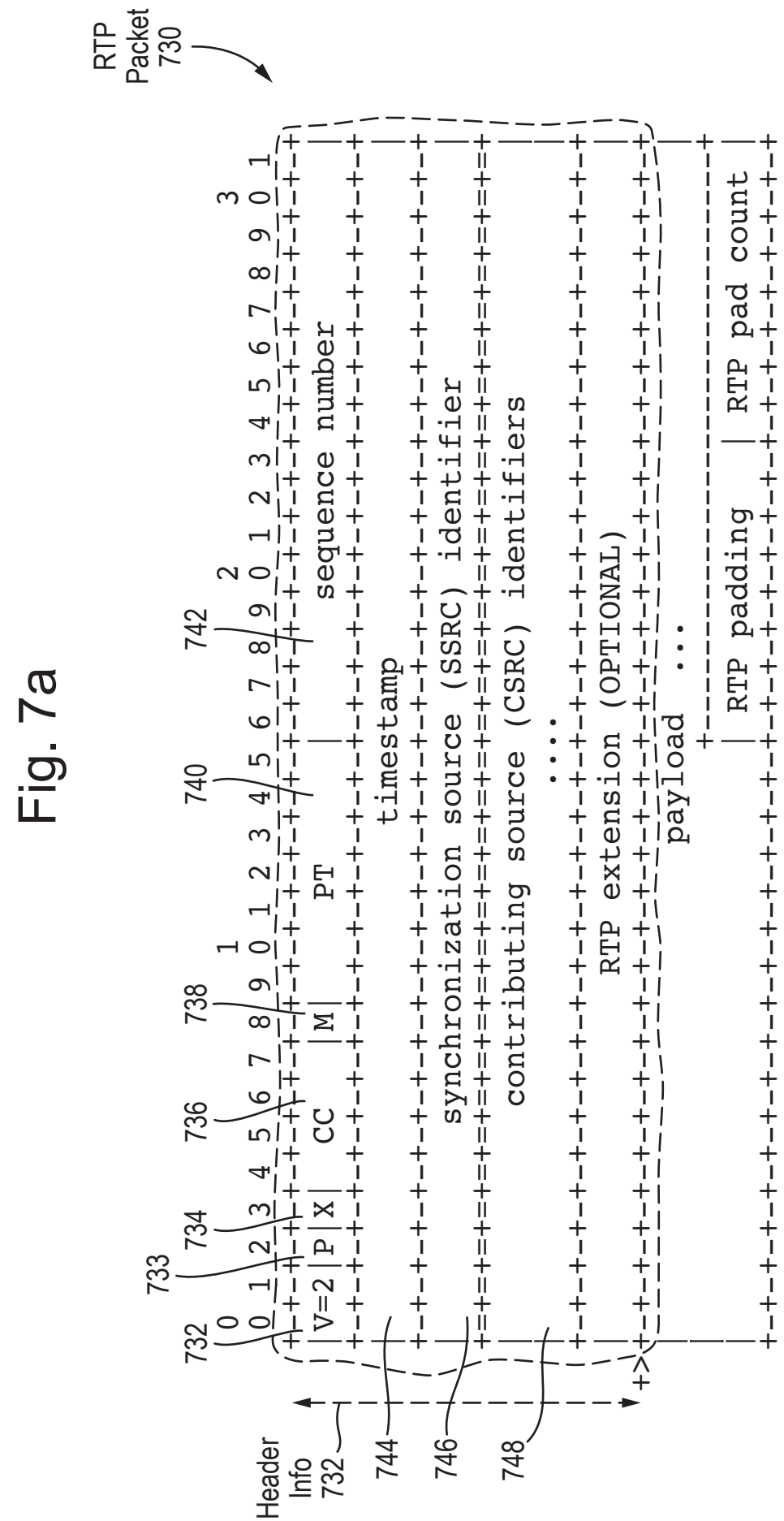
RTP Packet 730
733
734
736
738
740
742
732
Header Info 732
744
746
748
V=2
P
X
CC
M
PT
sequence number
timestamp
synchronization source (SSRC) identifier
contributing source (CSRC) identifiers
RTP extension (OPTIONAL)
payload ...
RTP padding
RTP pad count

Fig. 7b

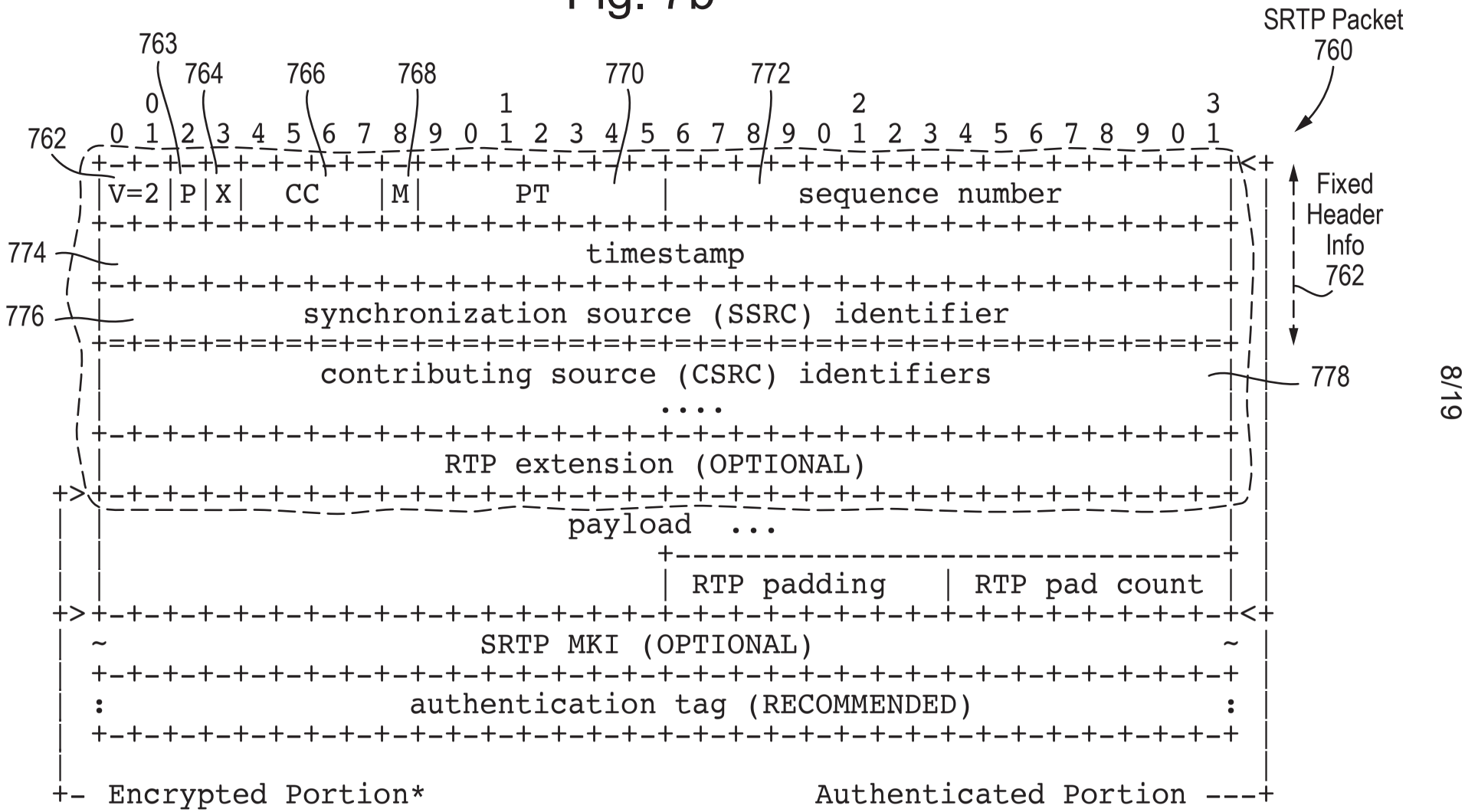
SRTP Packet
760
763
764
766
768
770
772
762
0 1 2 3 4 5 6 7 8 9 0 1 2 3 4 5 6 7 8 9 0 1 2 3 4 5 6 7 8 9 0 1
V=2
P
X
CC
M
PT
sequence number
774
timestamp
776
synchronization source (SSRC) identifier
contributing source (CSRC) identifiers
....
RTP extension (OPTIONAL)
payload ...
RTP padding
RTP pad count
SRTP MKI (OPTIONAL)
authentication tag (RECOMMENDED)
Fixed
Header
Info
762
778
Encrypted Portion*
Authenticated Portion

Fig. 13

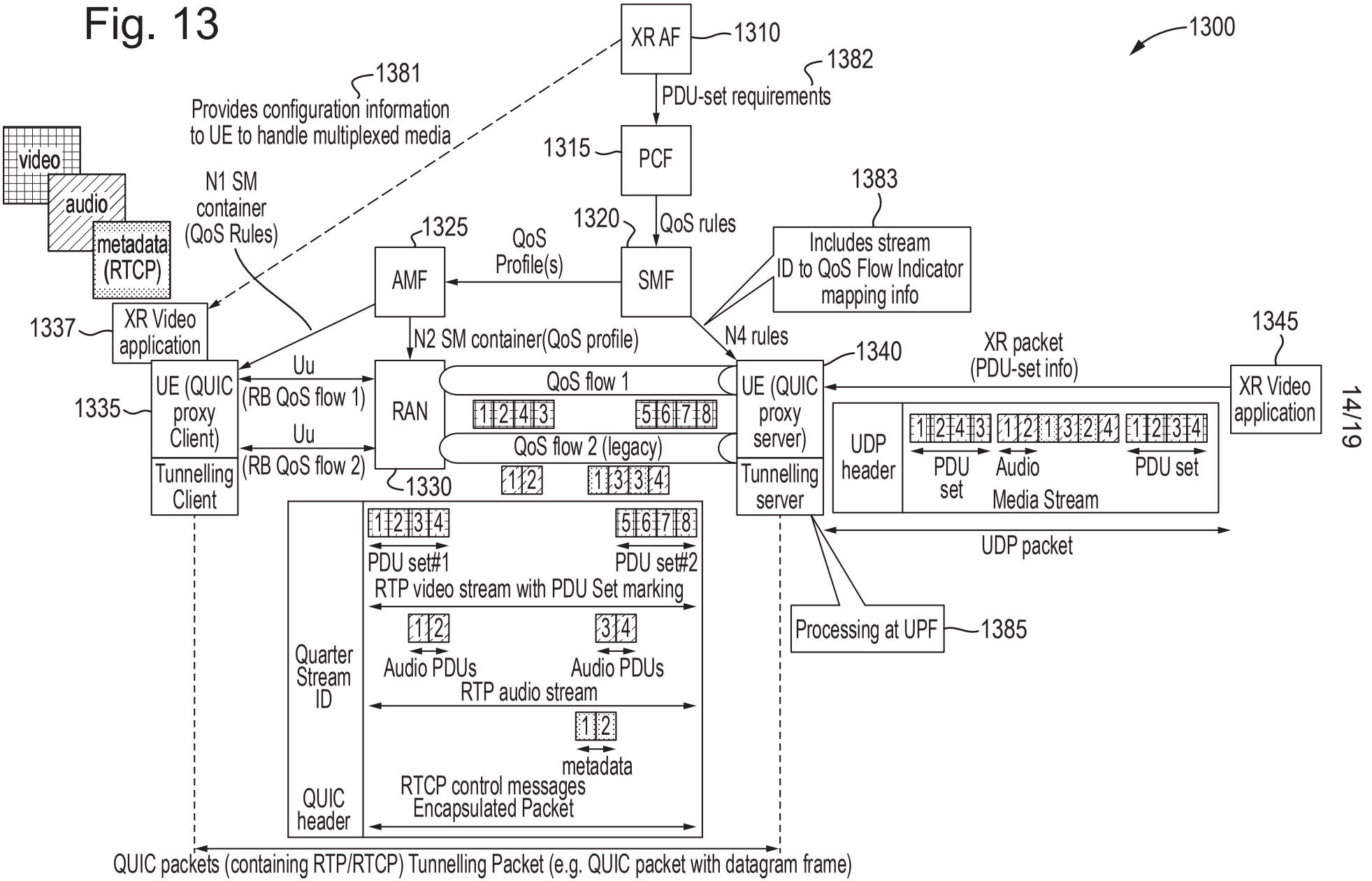
1300
XR AF
1310
1382
PDU-set requirements
1381
Provides configuration information to UE to handle multiplexed media
1315
PCF
video
audio
metadata (RTCP)
N1 SM container (QoS Rules)
1383
1320
QoS rules
1325
QoS Profile(s)
AMF
SMF
Includes stream ID to QoS Flow Indicator mapping info
1337
XR Video application
N2 SM container(QoS profile)
N4 rules
1345
1340
XR packet (PDU-set info)
XR Video application
UE (QUIC proxy Client)
1335
Uu (RB QoS flow 1)
Uu (RB QoS flow 2)
RAN
QoS flow 1
QoS flow 2 (legacy)
UE (QUIC proxy server)
UDP header
PDU set
Audio
PDU set
Media Stream
Tunnelling Client
1330
Tunnelling server
UDP packet
PDU set#1
PDU set#2
RTP video stream with PDU Set marking
Processing at UPF
1385
Quarter Stream ID
Audio PDUs
Audio PDUs
RTP audio stream
metadata
QUIC header
RTCP control messages Encapsulated Packet
QUIC packets (containing RTP/RTCP) Tunnelling Packet (e.g. QUIC packet with datagram frame)