Fig. 1

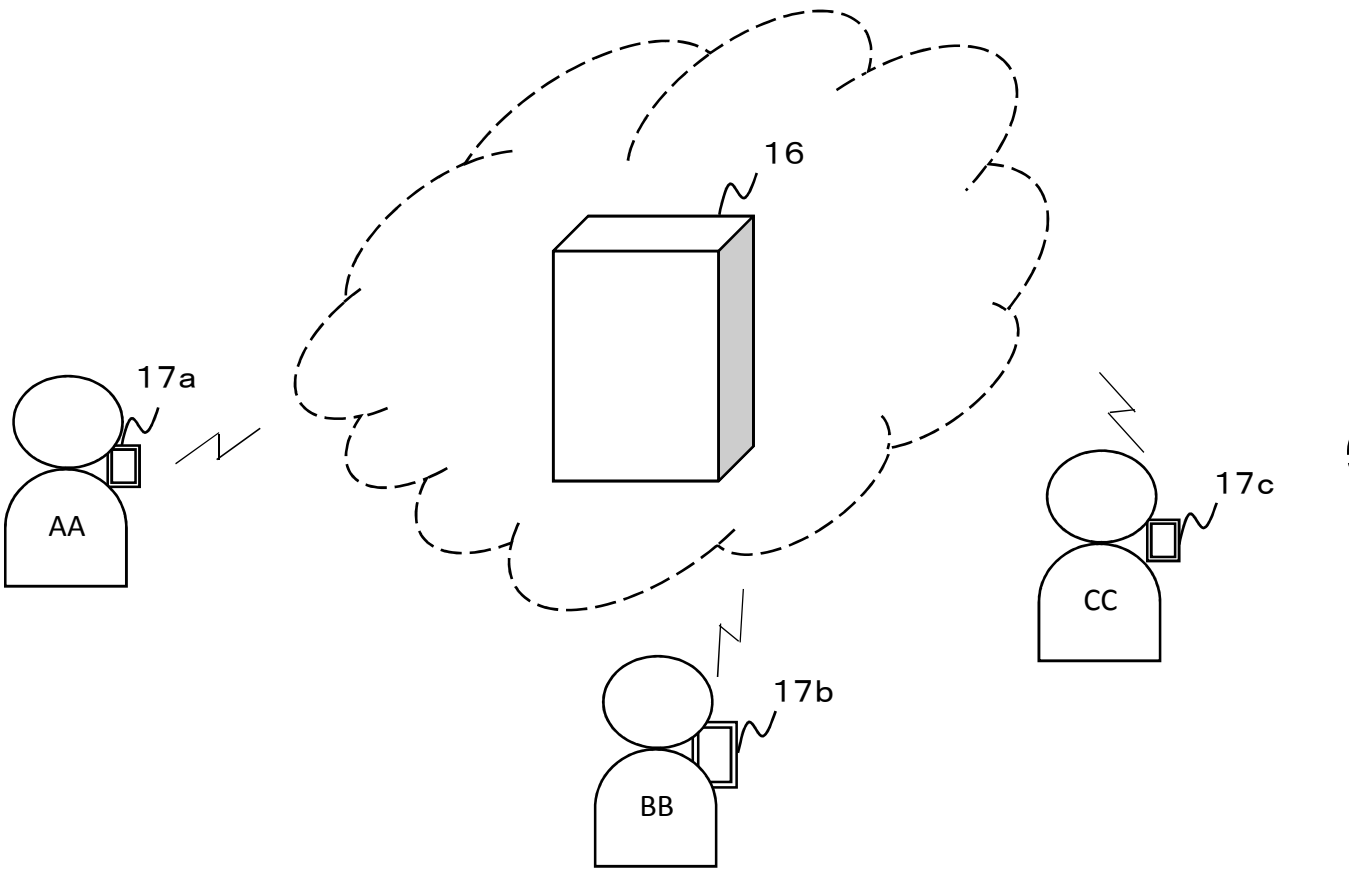

10

Fig. 2

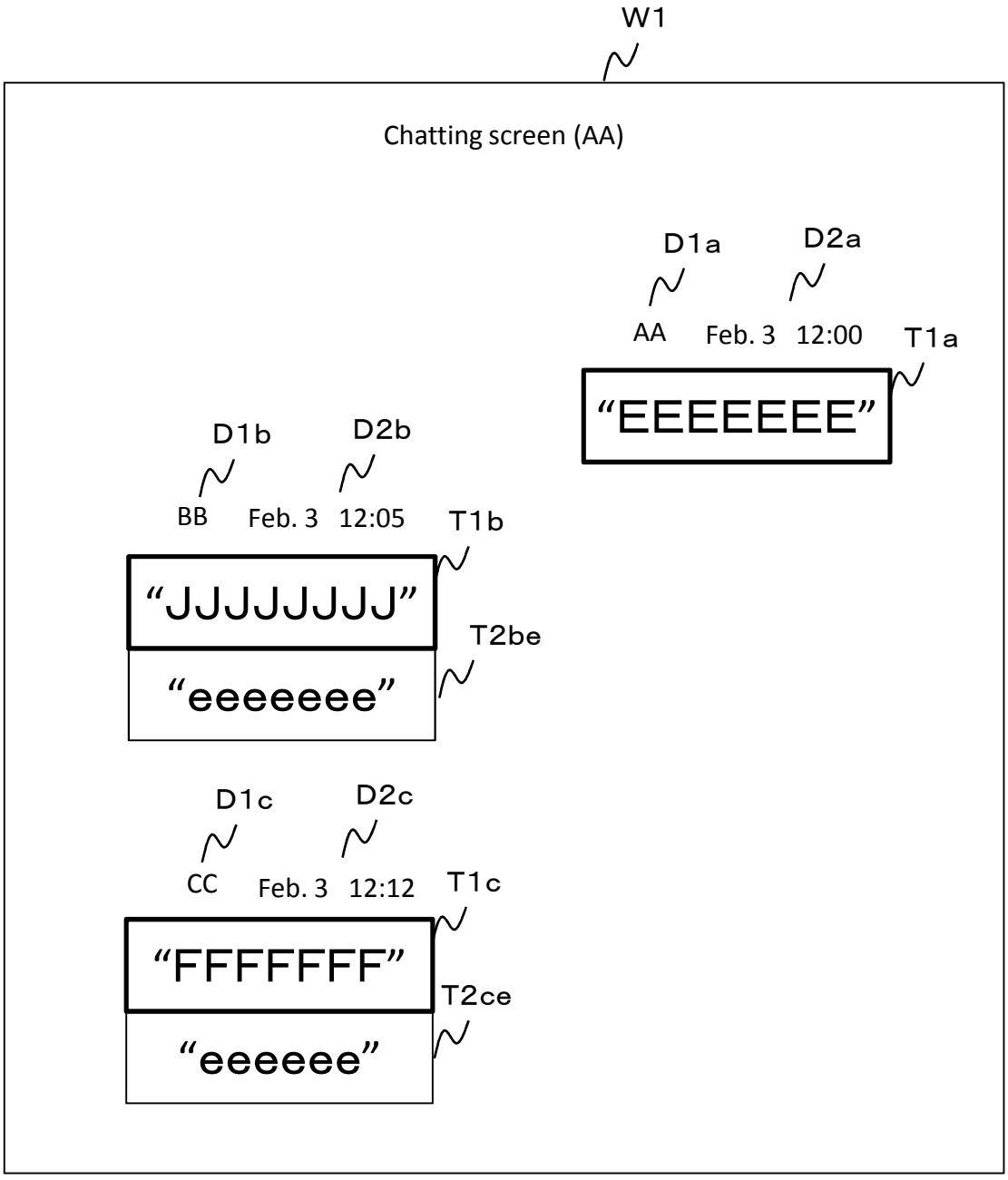
W1
Chatting screen (AA)
D1a
D2a
AA
Feb. 3
12:00
T1a
“EEEEEEE”
D1b
D2b
BB
Feb. 3
12:05
T1b
“JJJJJJJJ”
T2be
“eeeeeee”
D1c
D2c
CC
Feb. 3
12:12
T1c
“FFFFFFF”
T2ce
“eeeeee”

Fig. 3

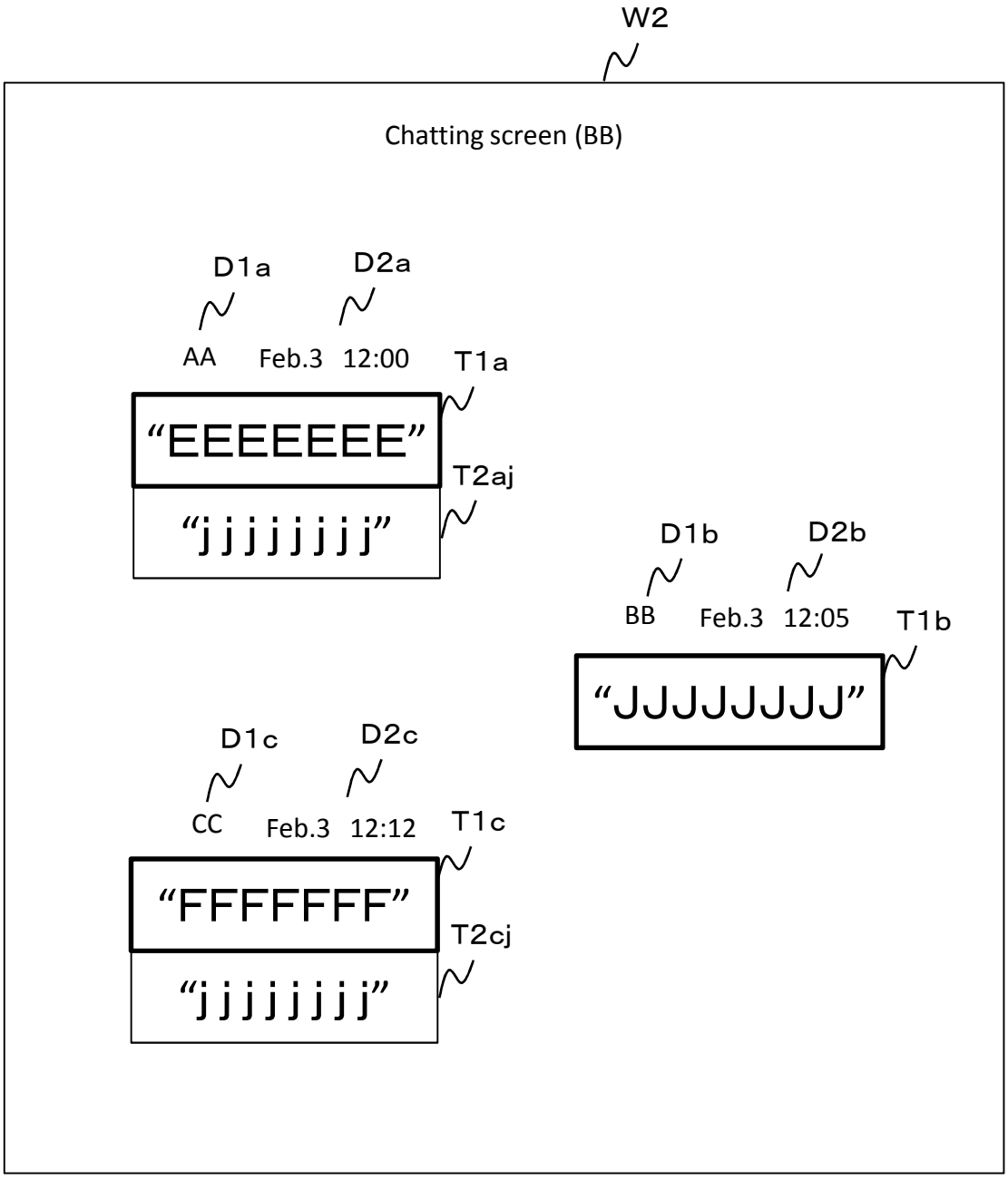
W2
Chatting screen (BB)
D1a
D2a
AA
Feb.3
12:00
T1a
“EEEEEEE”
T2aj
“j j j j j j j”
D1b
D2b
BB
Feb.3
12:05
T1b
“JJJJJJJJ”
D1c
D2c
CC
Feb.3
12:12
T1c
“FFFFFFF”
T2cj
“j j j j j j j”

Fig. 4

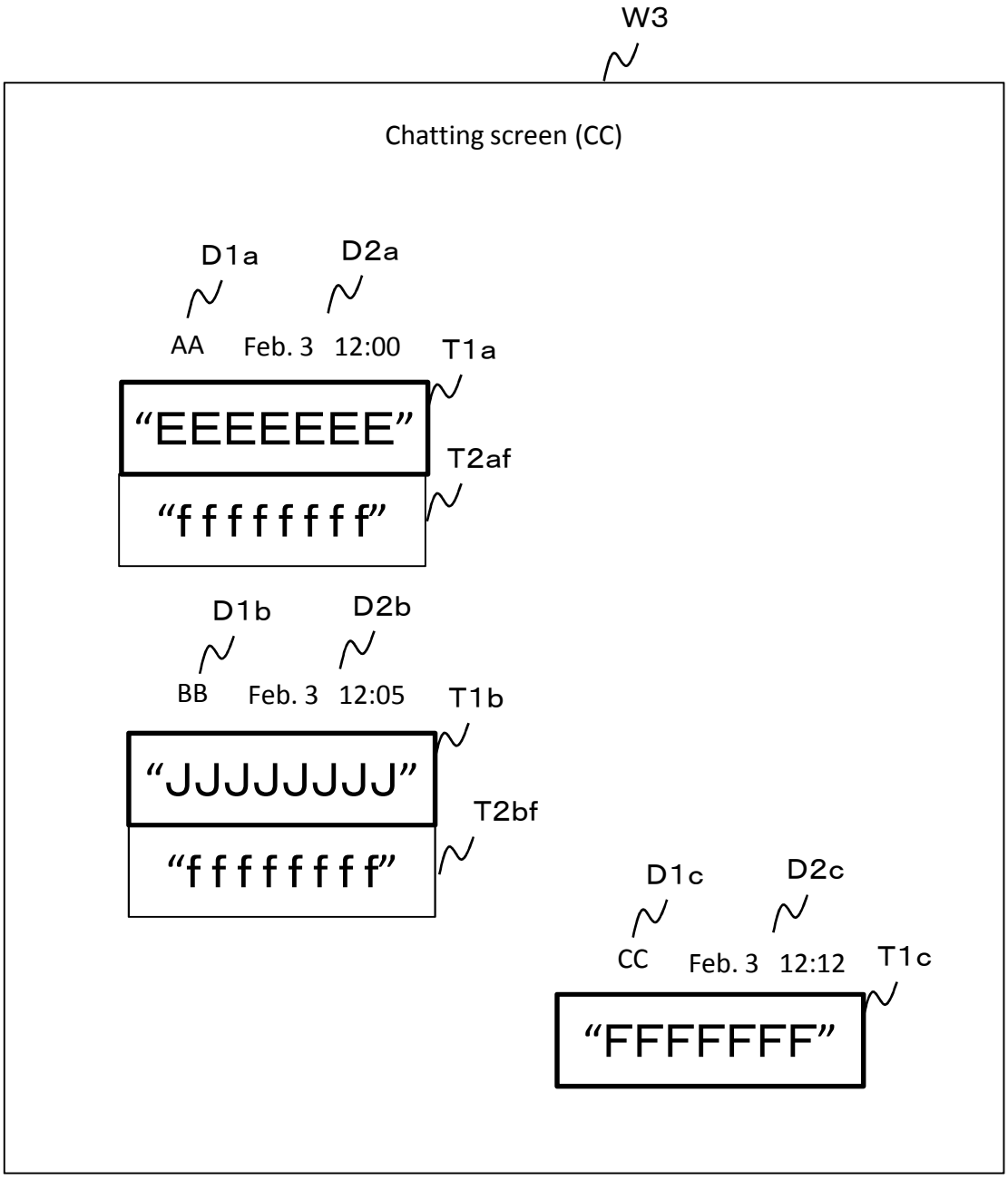
W3
Chatting screen (CC)
D1a
D2a
AA
Feb. 3
12:00
T1a
“EEEEEEE”
T2af
“f f f f f f f”
D1b
D2b
BB
Feb. 3
12:05
T1b
“JJJJJJJJ”
T2bf
“f f f f f f f”
D1c
D2c
CC
Feb. 3
12:12
T1c
“FFFFFFF”

Fig. 5

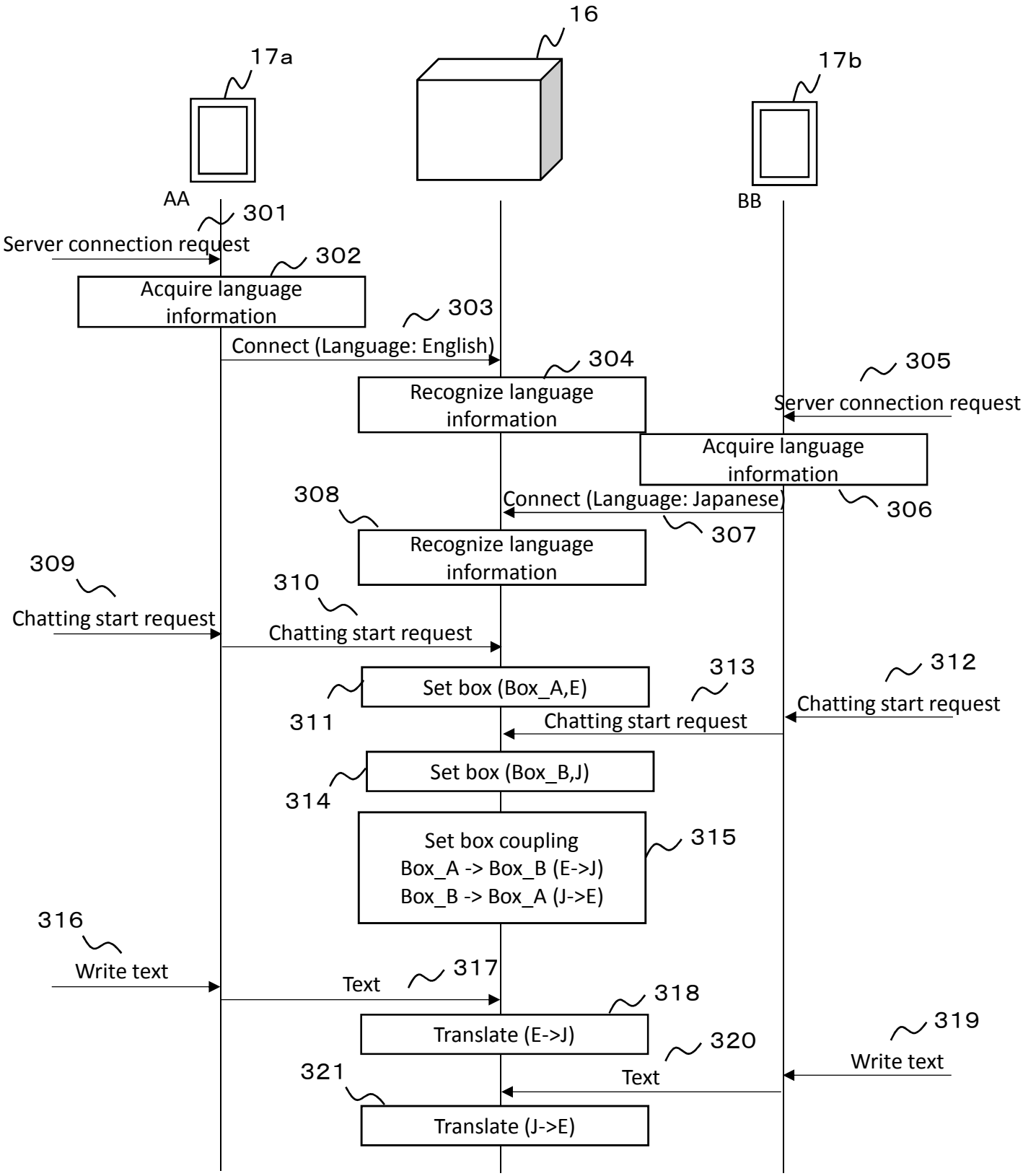
16
17a
17b
AA
BB
301
Server connection request
302
Acquire language information
303
Connect (Language: English)
304
Recognize language information
305
Server connection request
Acquire language information
306
Connect (Language: Japanese)
307
308
Recognize language information
309
Chatting start request
310
Chatting start request
311
Set box (Box_A,E)
312
Chatting start request
313
Chatting start request
314
Set box (Box_B,J)
315
Set box coupling
Box_A -> Box_B (E->J)
Box_B -> Box_A (J->E)
316
Write text
317
Text
318
Translate (E->J)
319
Write text
320
Text
321
Translate (J->E)

Fig. 6

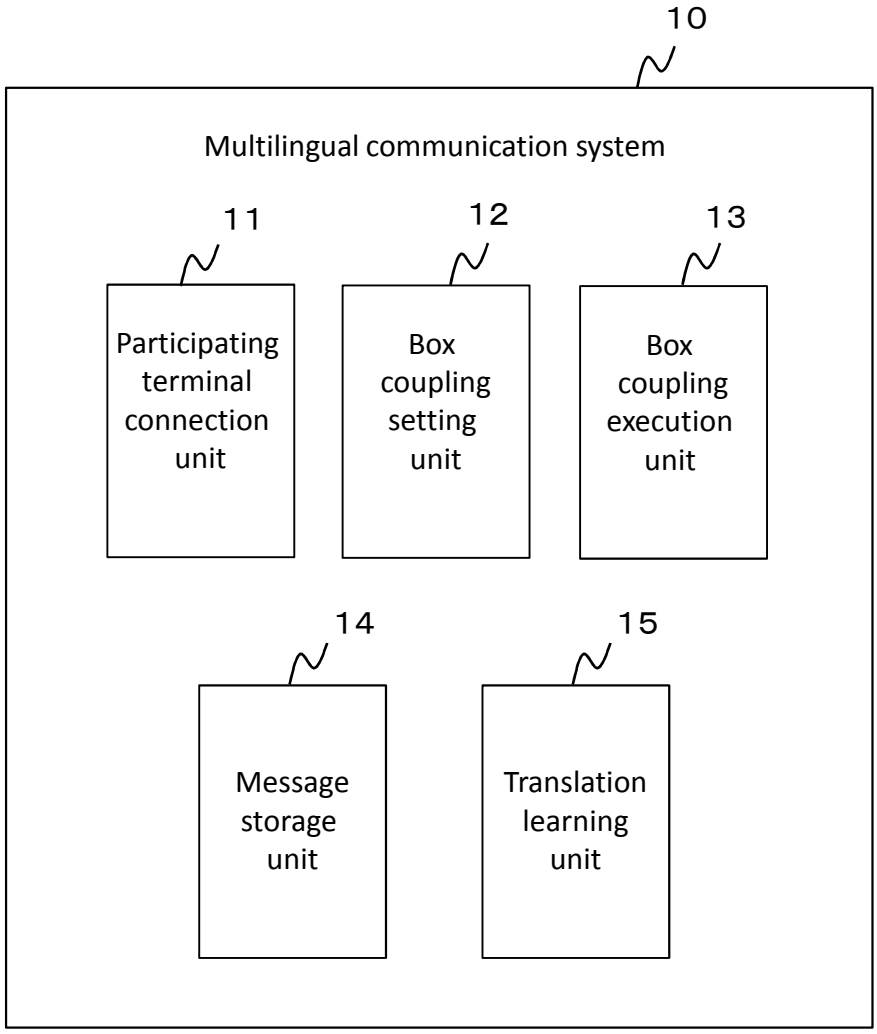
10
Multilingual communication system
11
Participating terminal connection unit
12
Box coupling setting unit
13
Box coupling execution unit
14
Message storage unit
15
Translation learning unit

Fig. 7

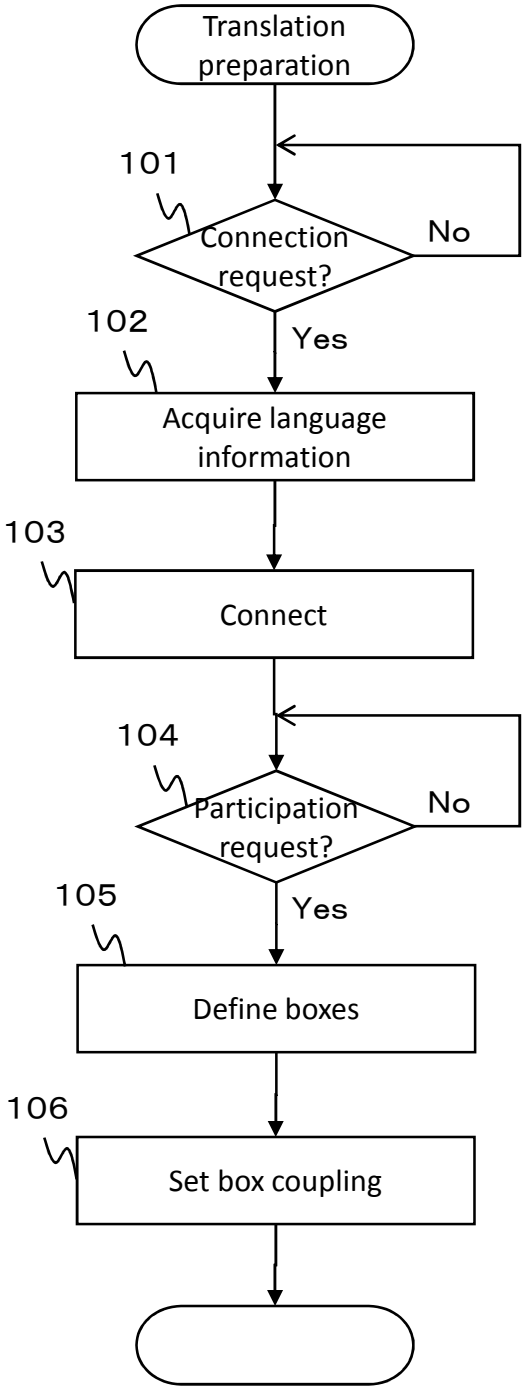
Translation preparation
101
Connection request?
No
Yes
102
Acquire language information
103
Connect
104
Participation request?
No
Yes
105
Define boxes
106
Set box coupling

Fig. 8

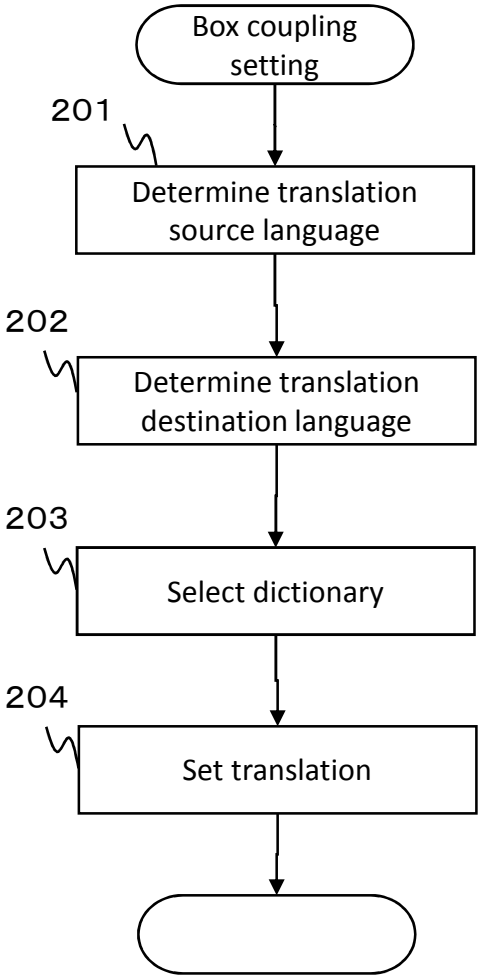
Box coupling setting
201
Determine translation source language
202
Determine translation destination language
203
Select dictionary
204
Set translation

Fig. 9

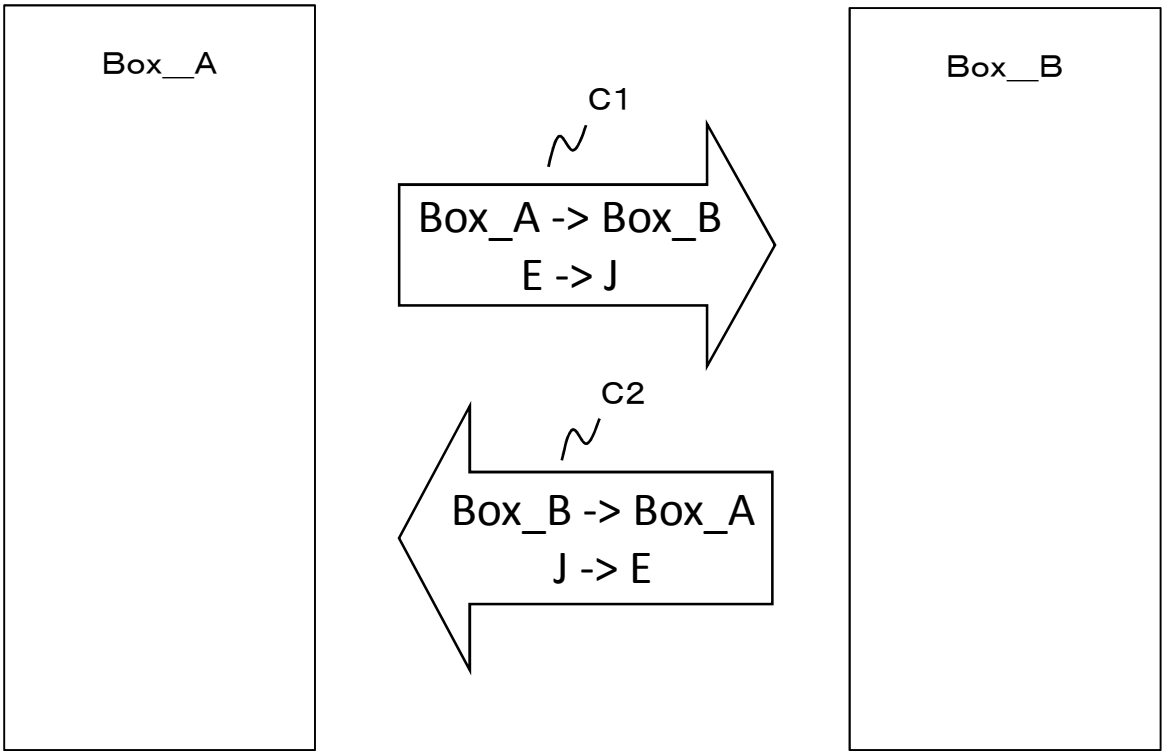

Fig. 10

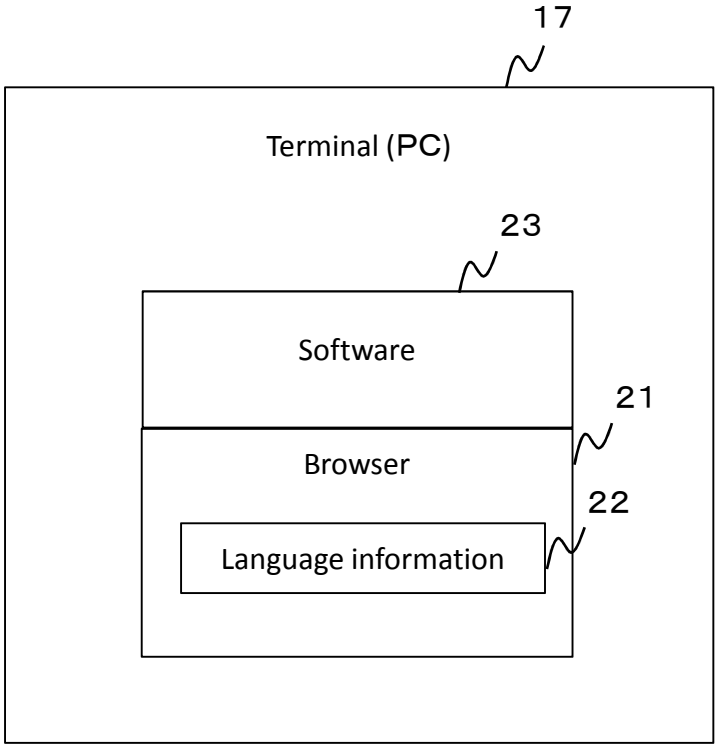
17
Terminal (PC)
23
Software
21
Browser
22
Language information

Fig. 11

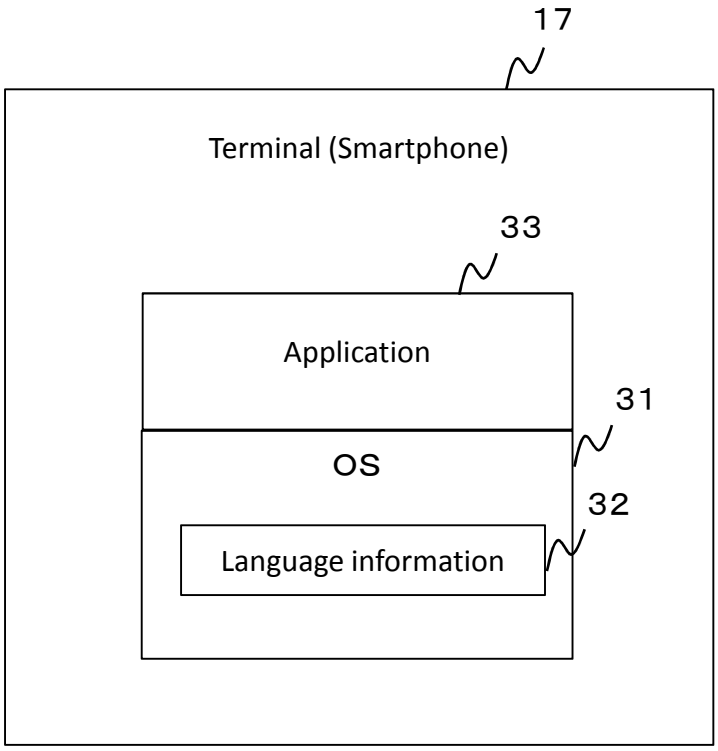
17
Terminal (Smartphone)
33
Application
31
OS
32
Language information

Fig. 12

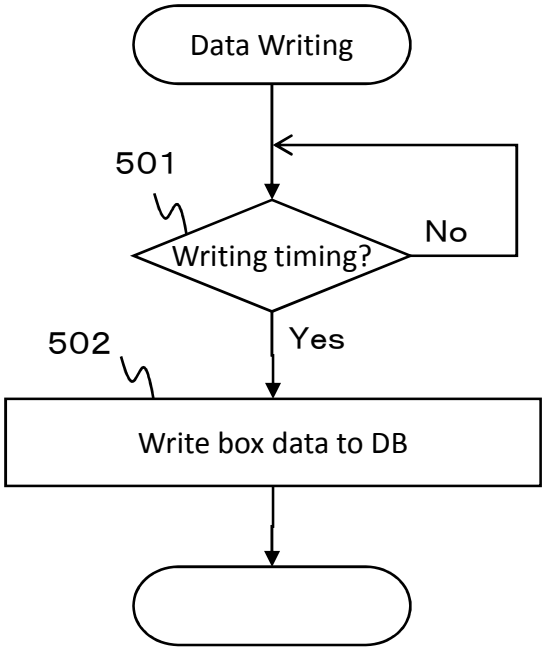
Data Writing
501
Writing timing?
No
Yes
502
Write box data to DB

Fig. 13

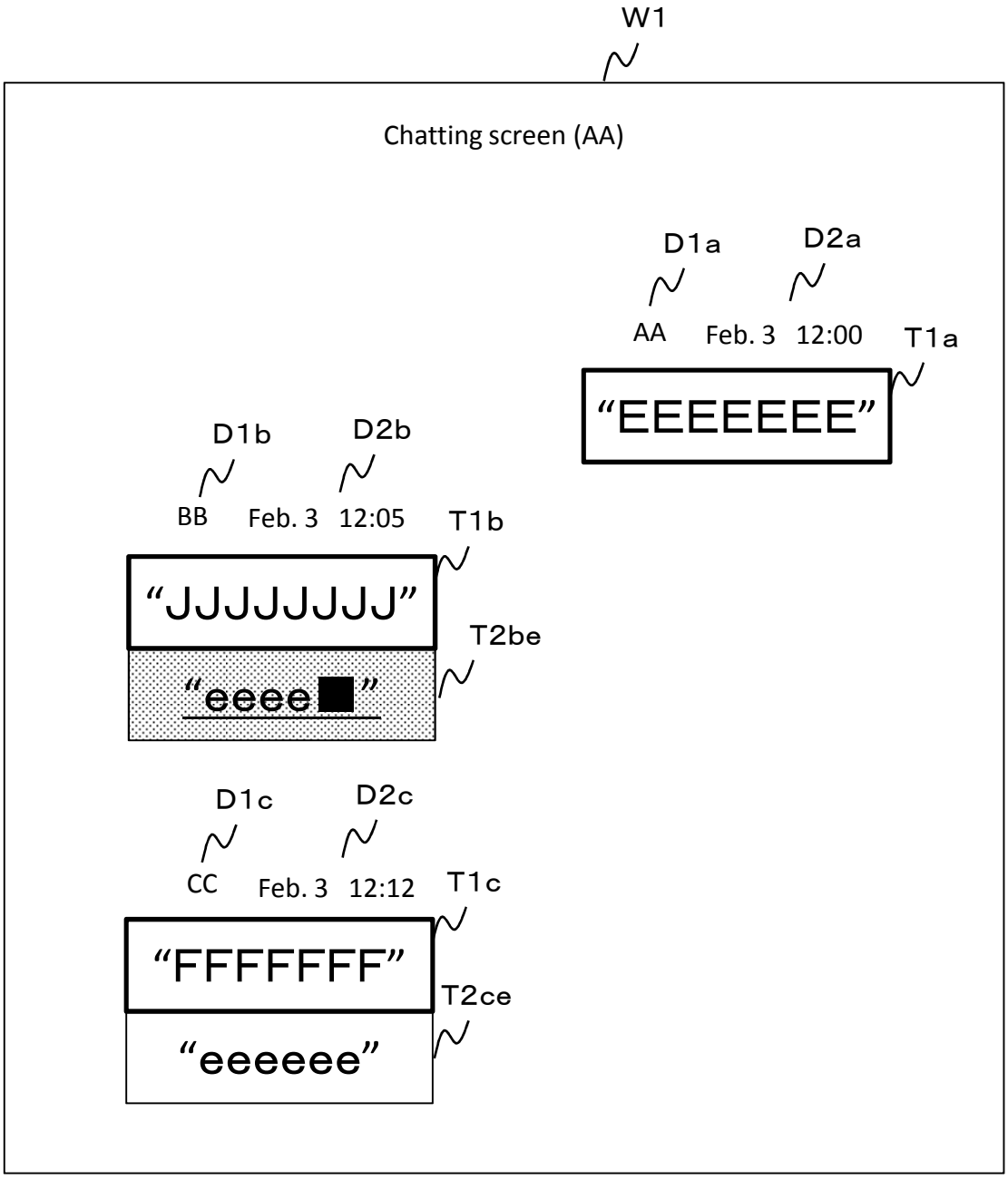
W1
Chatting screen (AA)
D1a
D2a
AA
Feb. 3
12:00
T1a
“EEEEEEE”
D1b
D2b
BB
Feb. 3
12:05
T1b
“JJJJJJJJ”
T2be
“eeee■”
D1c
D2c
CC
Feb. 3
12:12
T1c
“FFFFFFF”
T2ce
“eeeeee”

Fig. 14

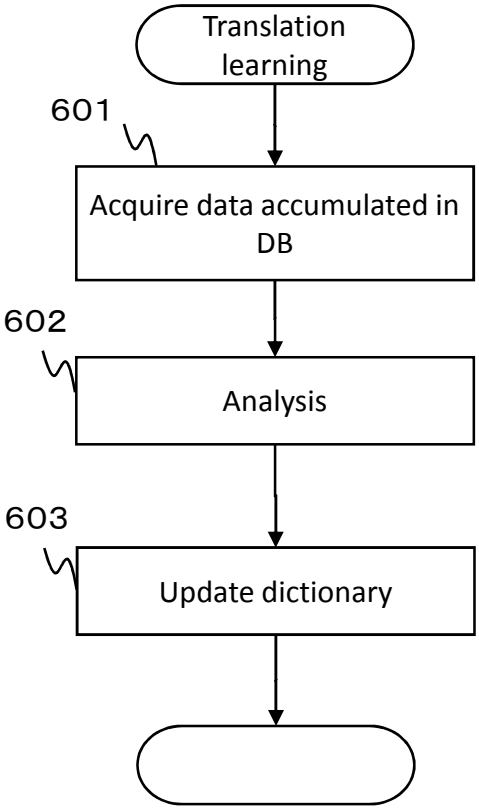
Translation learning
601
Acquire data accumulated in DB
602
Analysis
603
Update dictionary

Fig. 15

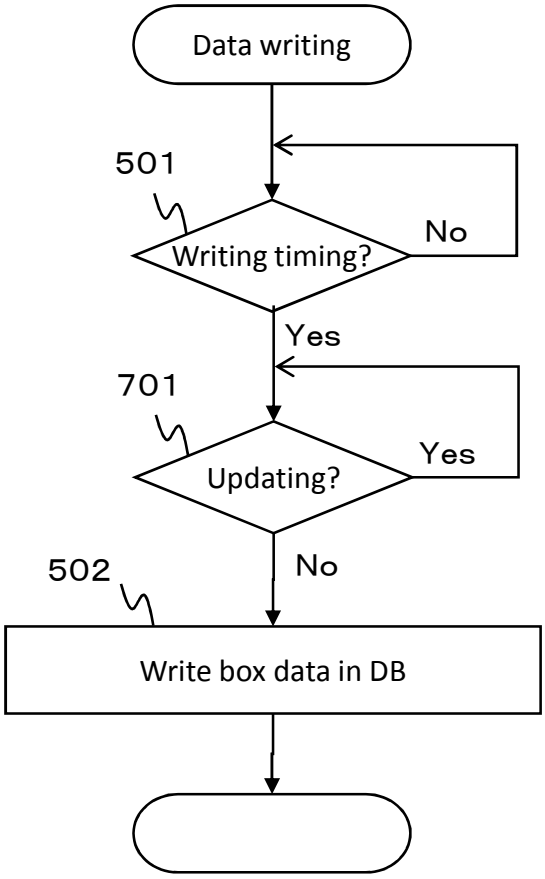
Data writing
501
Writing timing?
No
Yes
701
Updating?
Yes
No
502
Write box data in DB

Fig. 16

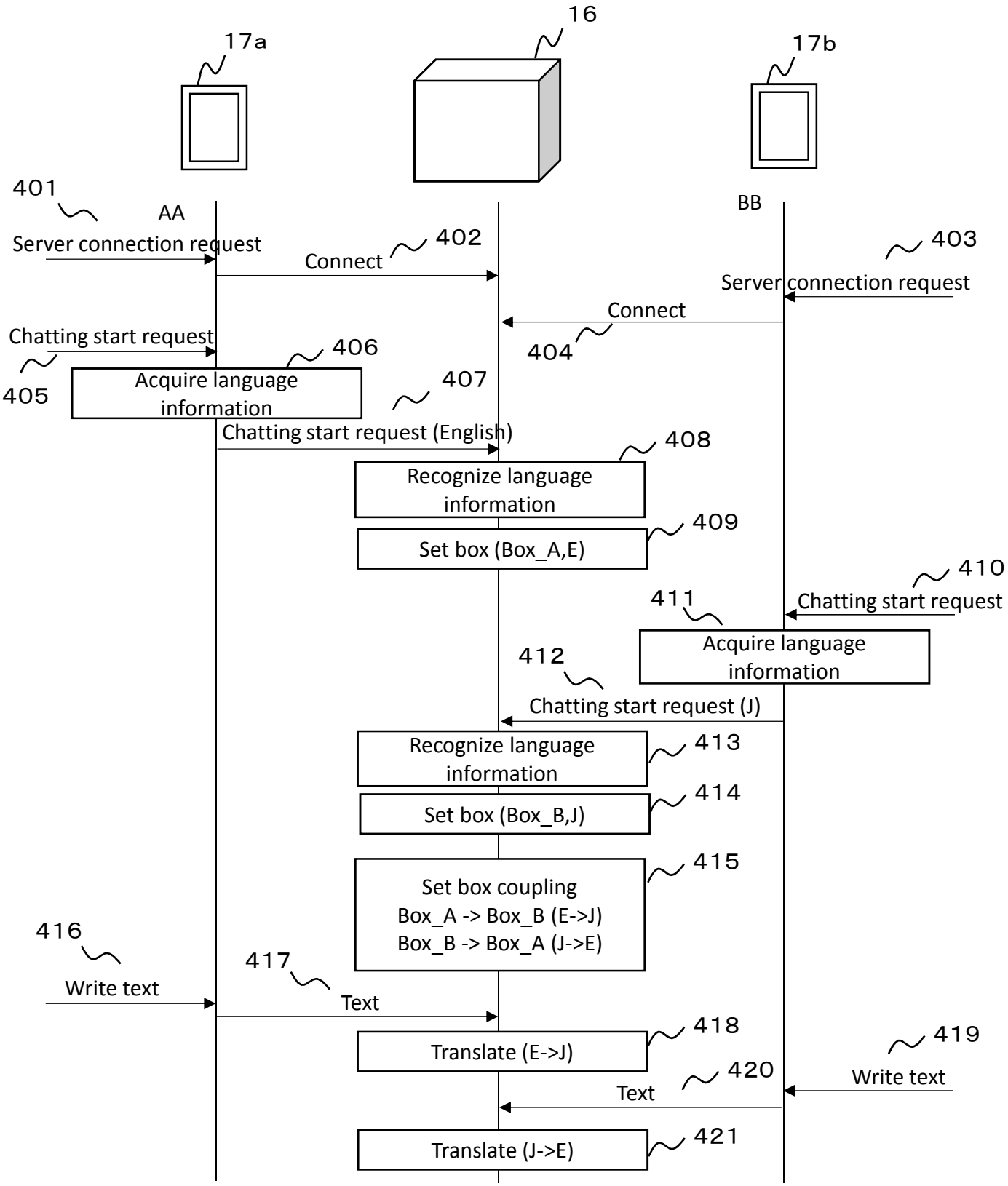
16
17a
17b
401
AA
BB
Server connection request
402
Connect
403
Server connection request
Connect
404
Chatting start request
405
406
Acquire language information
407
Chatting start request (English)
408
Recognize language information
409
Set box (Box_A,E)
410
Chatting start request
411
Acquire language information
412
Chatting start request (J)
Recognize language information
413
414
Set box (Box_B,J)
415
Set box coupling
Box_A -> Box_B (E->J)
Box_B -> Box_A (J->E)
416
Write text
417
Text
418
Translate (E->J)
419
Write text
420
Text
421
Translate (J->E)