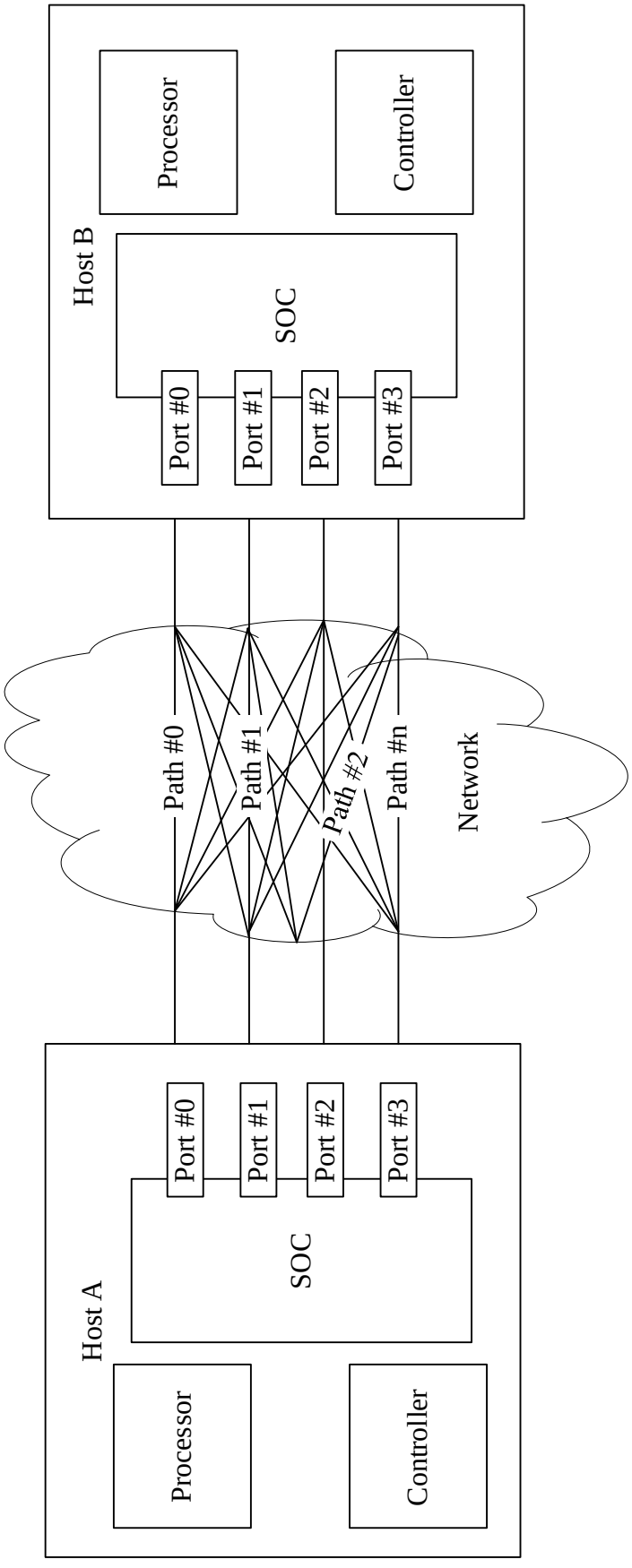
Host B
Processor
Controller
SOC
Port #0
Port #1
Port #2
Port #3
Path #0
Path #1
Path #2
Path #n
Network
Host A
Processor
Controller
SOC
Port #0
Port #1
Port #2
Port #3

FIG. 4

Byte 0								Byte 1								Byte 2								Byte 3							
7	6	5	4	3	2	1	0	7	6	5	4	3	2	1	0	7	6	5	4	3	2	1	0	7	6	5	4	3	2	1	0
																RM															
																LB															
TPH																															
CIP																															
UPI																															
SEID																															
DEID																															
TAH																															
Payload																															

FIG. 10

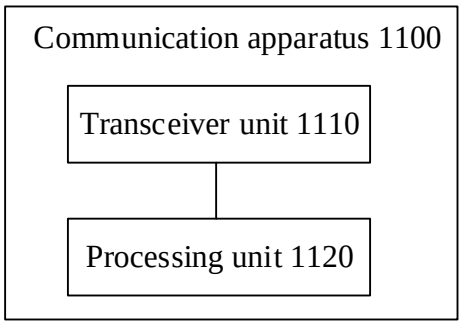

FIG. 11

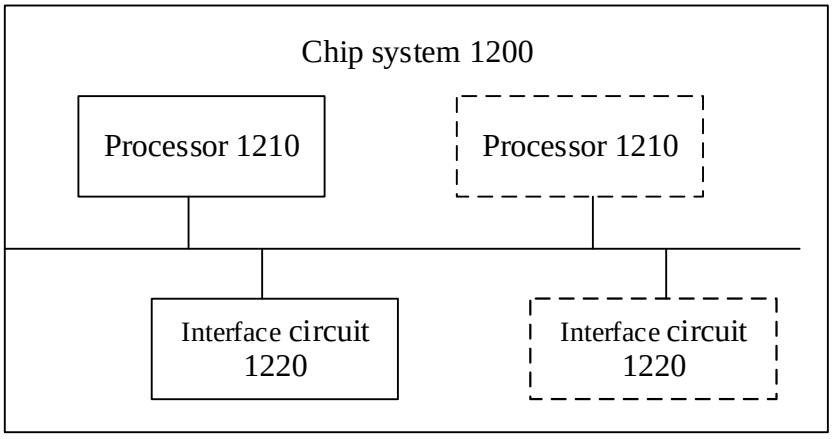

FIG. 12