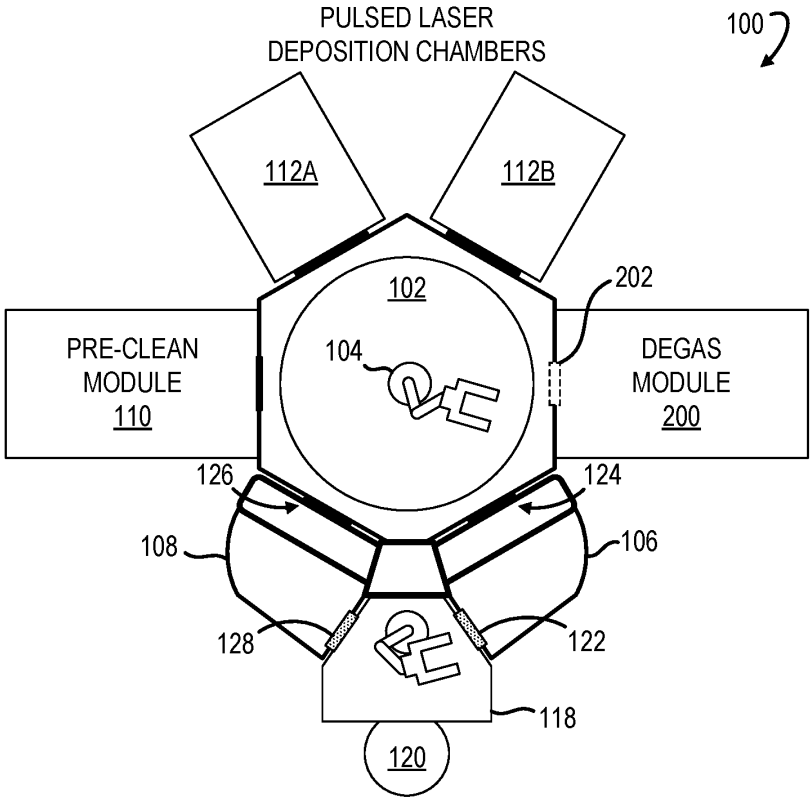
PULSED LASER
DEPOSITION CHAMBERS
100
112A
112B
102
202
PRE-CLEAN
MODULE
110
104
DEGAS
MODULE
200
126
124
108
106
128
122
118
120

FIG. 1

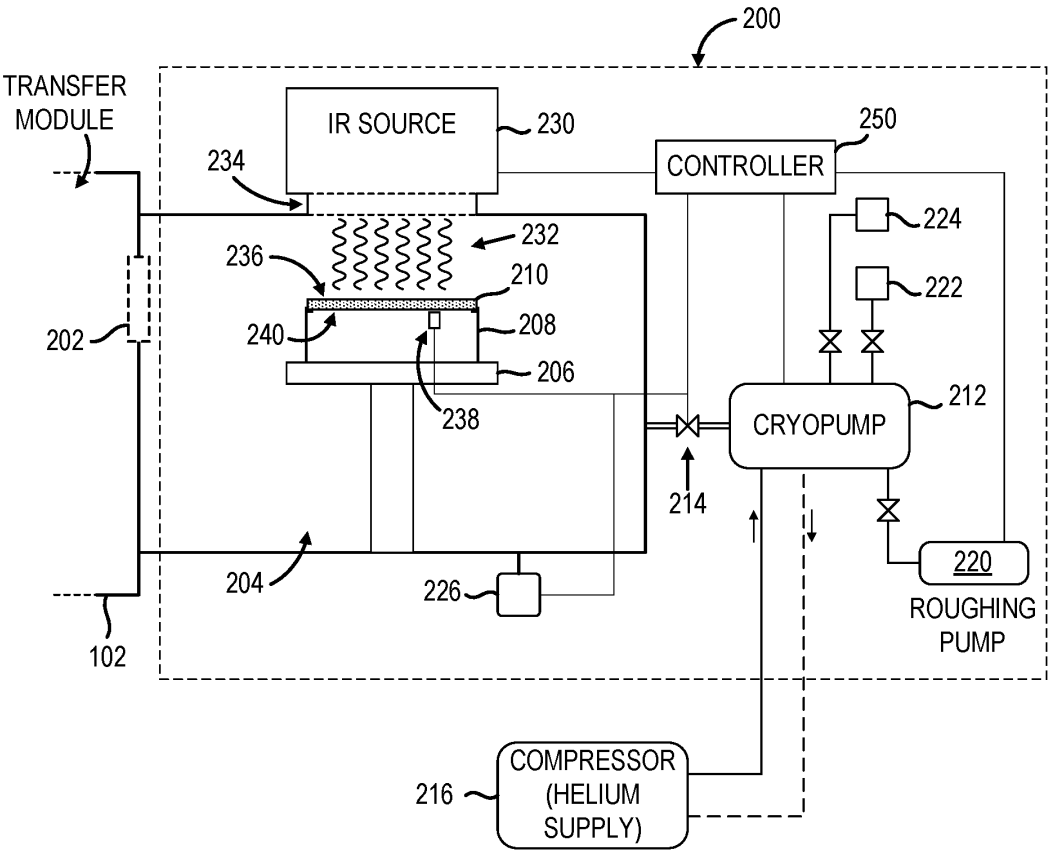
200
TRANSFER MODULE
IR SOURCE
230
234
CONTROLLER
250
224
232
236
222
210
202
240
208
206
238
212
CRYOPUMP
214
220
ROUGHING PUMP
204
226
102
216
COMPRESSOR (HELIUM SUPPLY)

FIG. 2

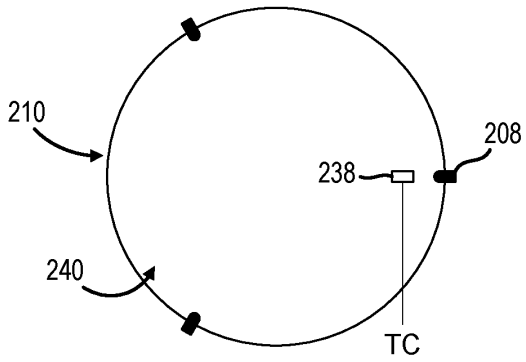

FIG. 3

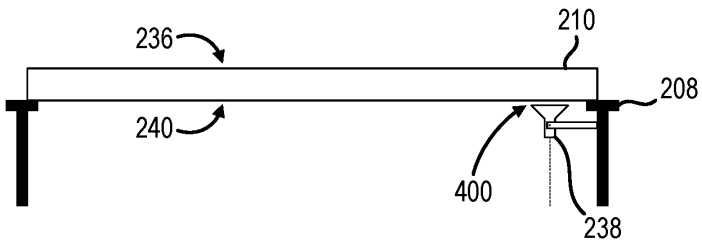

FIG. 4

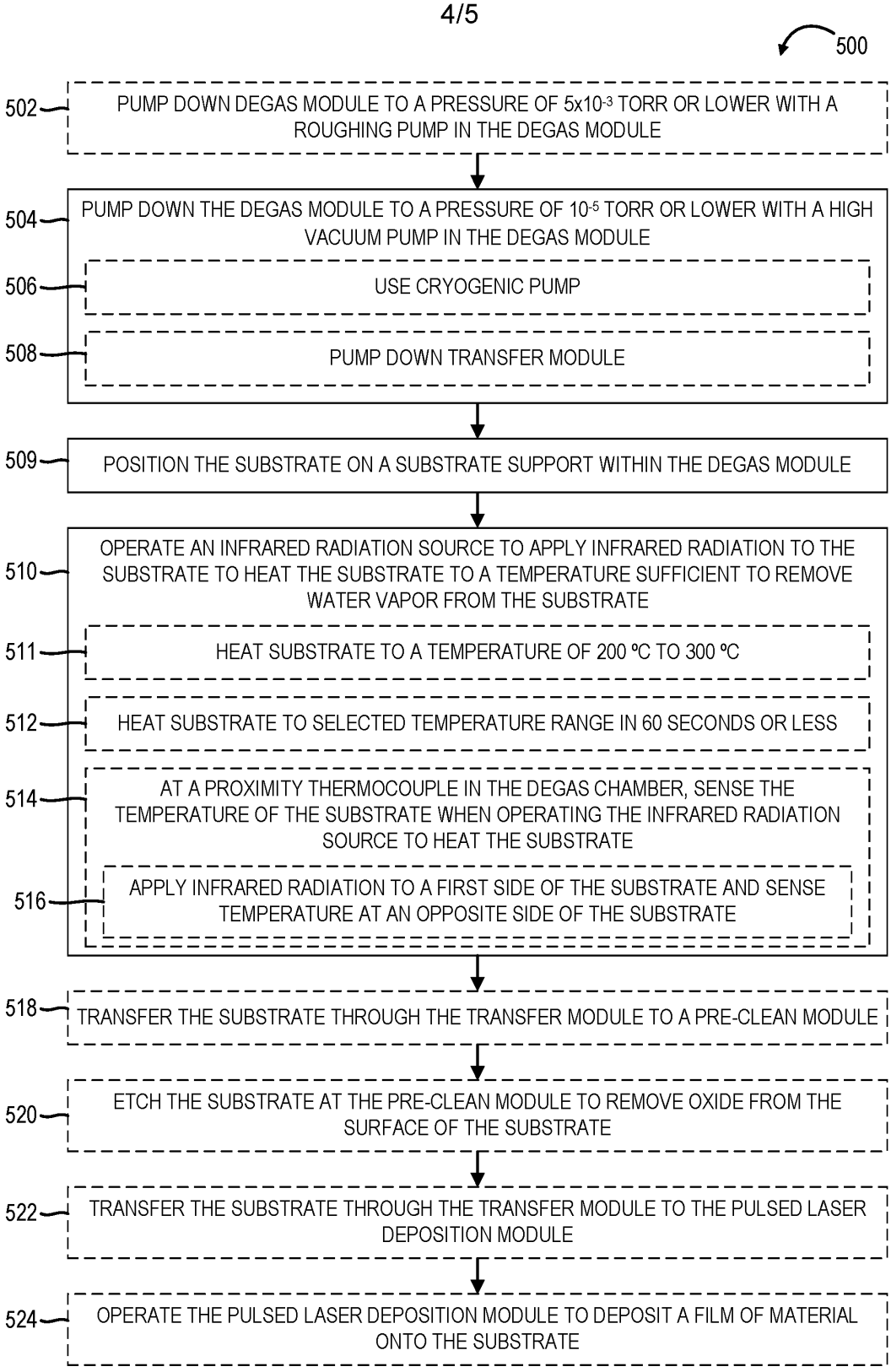
500
502
PUMP DOWN DEGAS MODULE TO A PRESSURE OF 5x10-3 TORR OR LOWER WITH A ROUGHING PUMP IN THE DEGAS MODULE
504
PUMP DOWN THE DEGAS MODULE TO A PRESSURE OF 10-5 TORR OR LOWER WITH A HIGH VACUUM PUMP IN THE DEGAS MODULE
506
USE CRYOGENIC PUMP
508
PUMP DOWN TRANSFER MODULE
509
POSITION THE SUBSTRATE ON A SUBSTRATE SUPPORT WITHIN THE DEGAS MODULE
510
OPERATE AN INFRARED RADIATION SOURCE TO APPLY INFRARED RADIATION TO THE SUBSTRATE TO HEAT THE SUBSTRATE TO A TEMPERATURE SUFFICIENT TO REMOVE WATER VAPOR FROM THE SUBSTRATE
511
HEAT SUBSTRATE TO A TEMPERATURE OF 200 °C TO 300 °C
512
HEAT SUBSTRATE TO SELECTED TEMPERATURE RANGE IN 60 SECONDS OR LESS
514
AT A PROXIMITY THERMOCOUPLE IN THE DEGAS CHAMBER, SENSE THE TEMPERATURE OF THE SUBSTRATE WHEN OPERATING THE INFRARED RADIATION SOURCE TO HEAT THE SUBSTRATE
516
APPLY INFRARED RADIATION TO A FIRST SIDE OF THE SUBSTRATE AND SENSE TEMPERATURE AT AN OPPOSITE SIDE OF THE SUBSTRATE
518
TRANSFER THE SUBSTRATE THROUGH THE TRANSFER MODULE TO A PRE-CLEAN MODULE
520
ETCH THE SUBSTRATE AT THE PRE-CLEAN MODULE TO REMOVE OXIDE FROM THE SURFACE OF THE SUBSTRATE
522
TRANSFER THE SUBSTRATE THROUGH THE TRANSFER MODULE TO THE PULSED LASER DEPOSITION MODULE
524
OPERATE THE PULSED LASER DEPOSITION MODULE TO DEPOSIT A FILM OF MATERIAL ONTO THE SUBSTRATE

FIG. 5

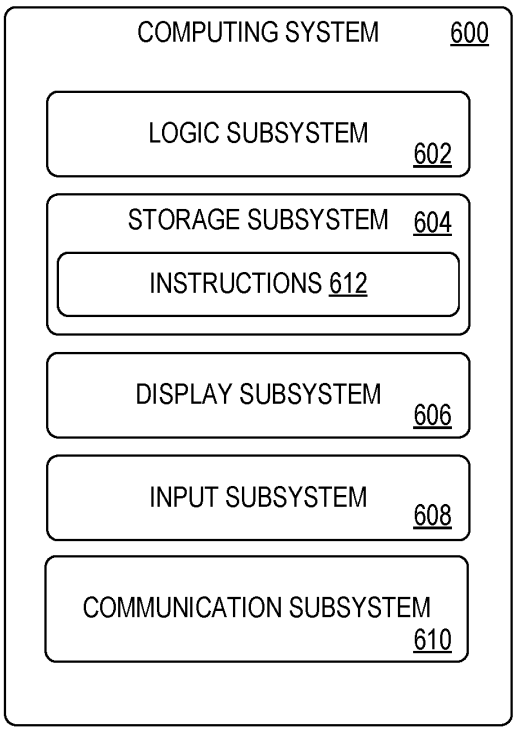
COMPUTING SYSTEM 600
LOGIC SUBSYSTEM 602
STORAGE SUBSYSTEM 604
INSTRUCTIONS 612
DISPLAY SUBSYSTEM 606
INPUT SUBSYSTEM 608
COMMUNICATION SUBSYSTEM 610

FIG. 6