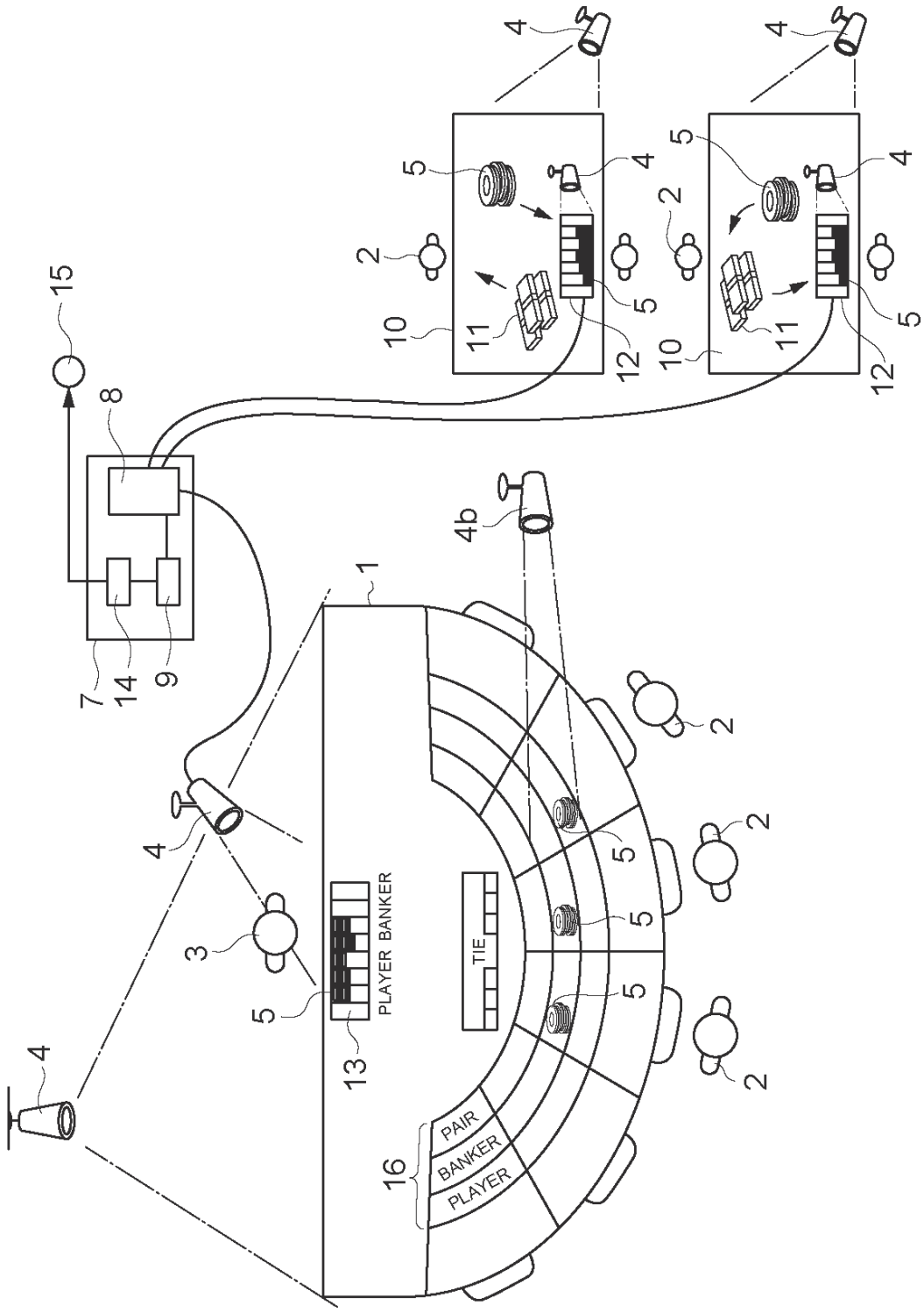

Fig. 1

Fig. 2

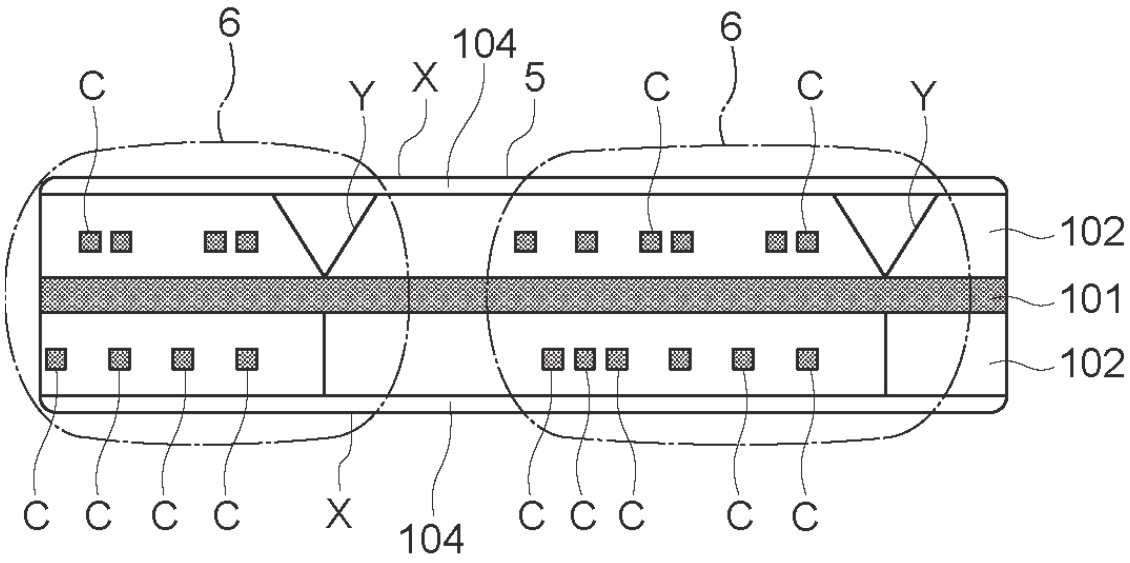

Fig. 3

(a)

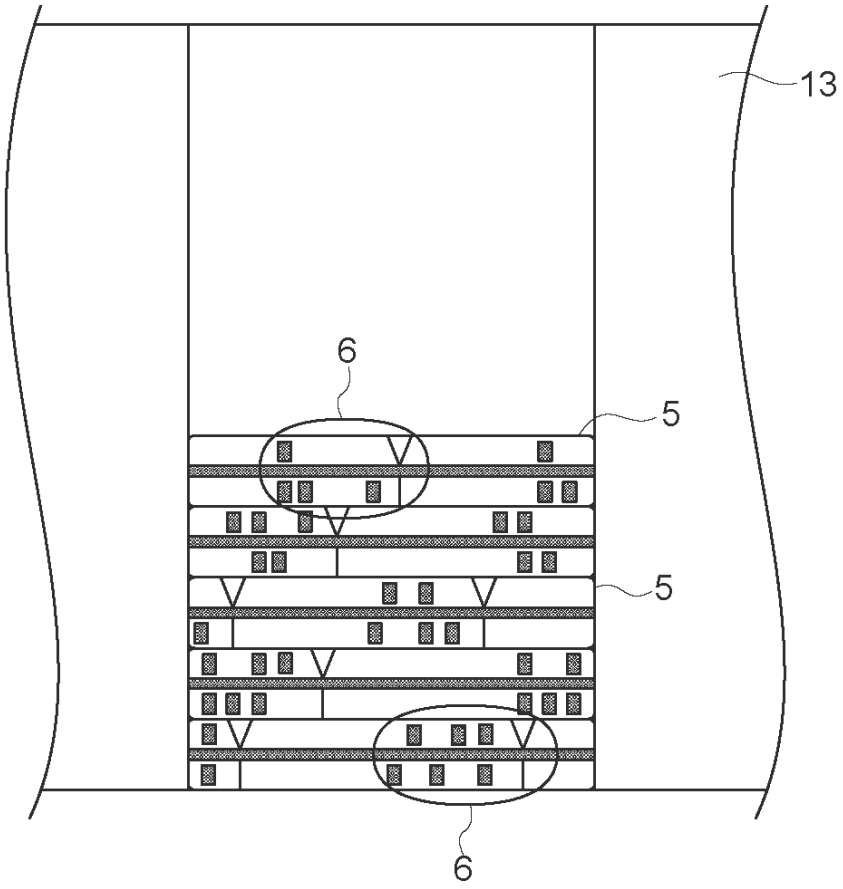

(b)

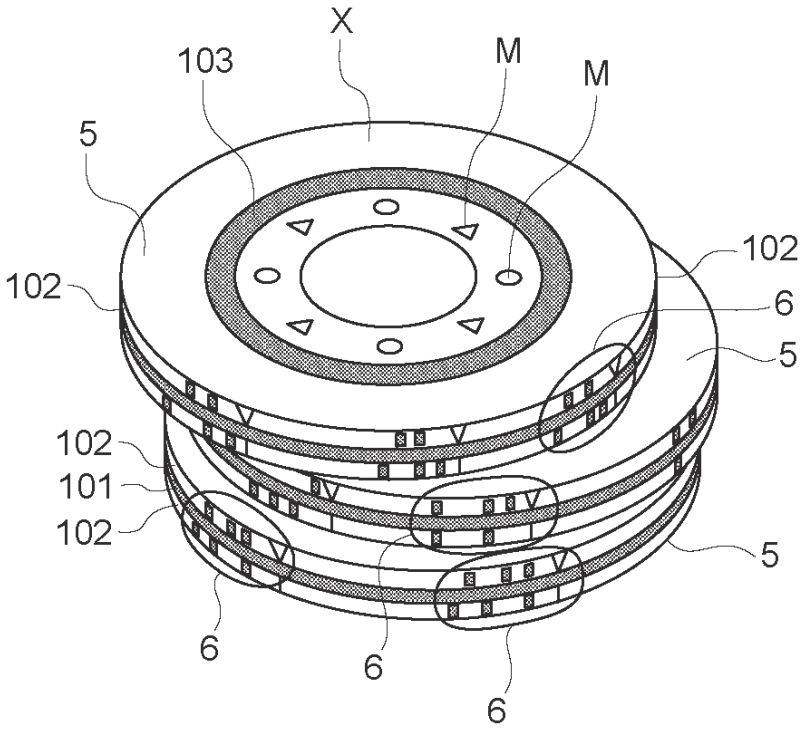

Fig. 4

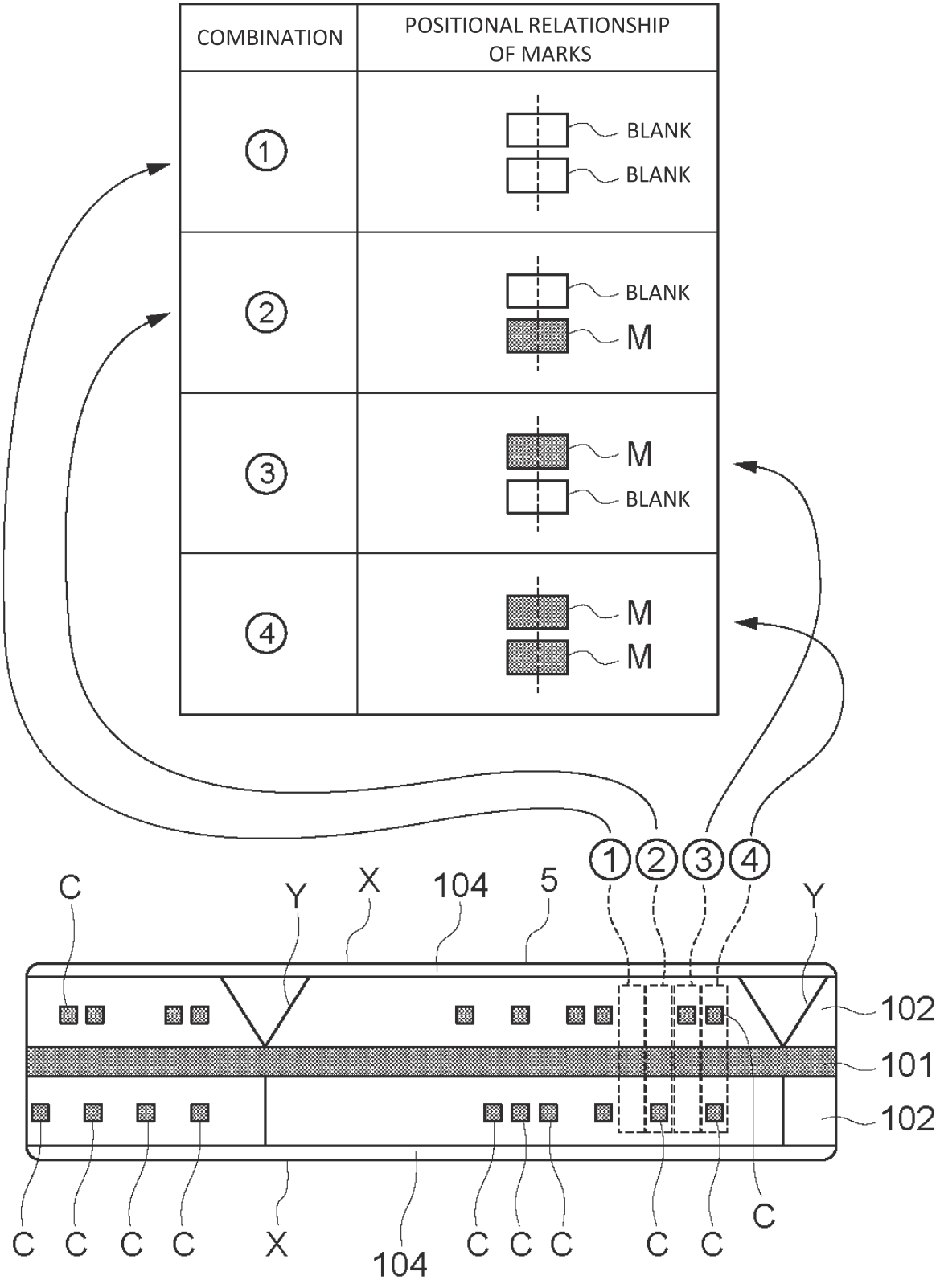
COMBINATION
POSITIONAL RELATIONSHIP OF MARKS
1
BLANK
BLANK
2
BLANK
M
3
M
BLANK
4
M
M
1
2
3
4
C
Y
X
104
5
Y
102
101
102
C
C
C
C
X
104
C
C
C
C
C
C
C

Fig. 5

