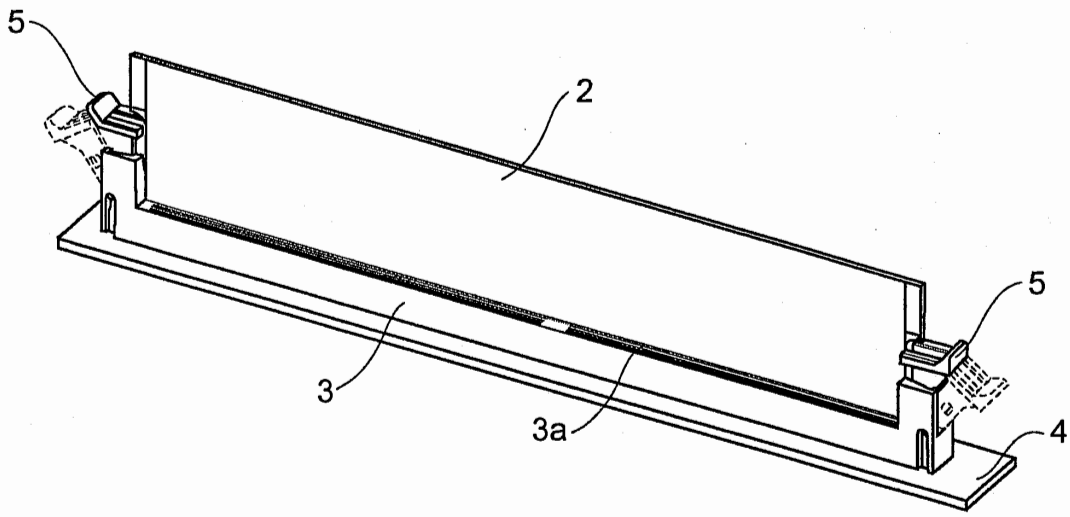

FIGURE 1
(PRIOR ART)

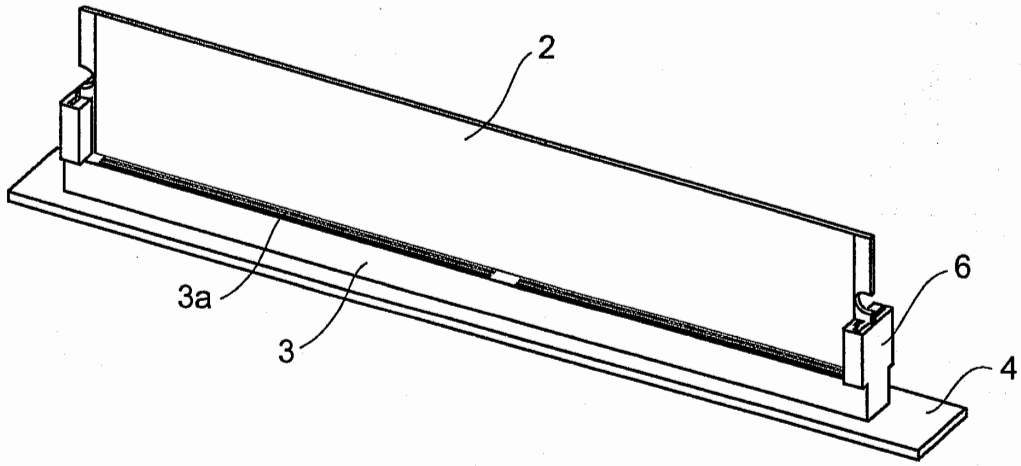

FIGURE 2

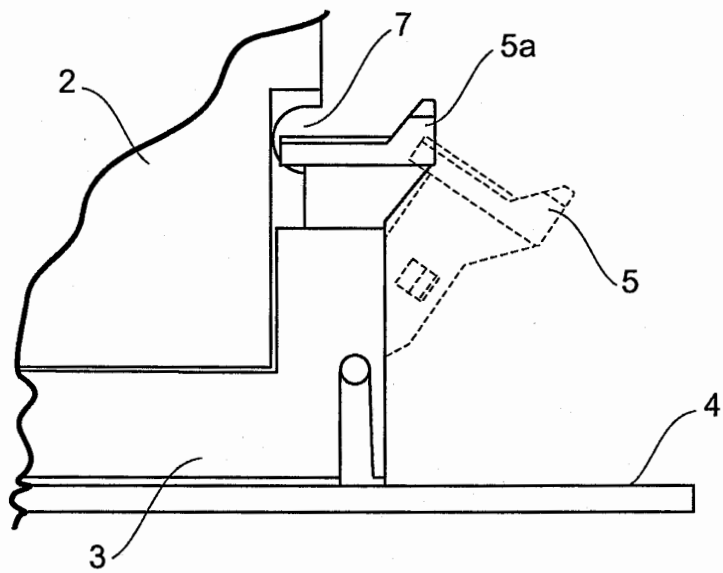

FIGURE 3
(PRIOR ART)

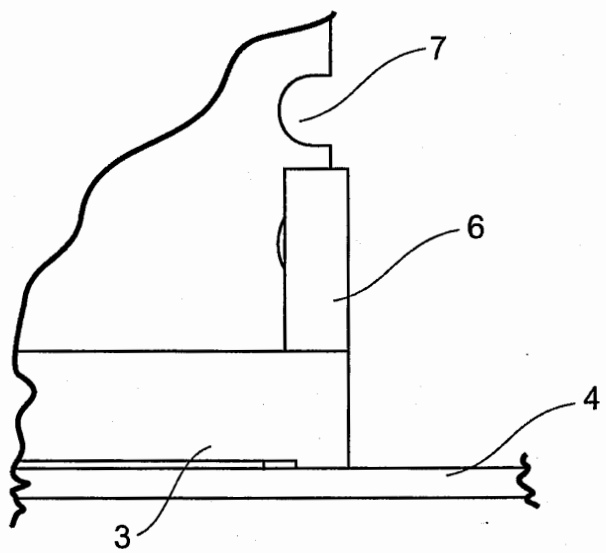

FIGURE 4

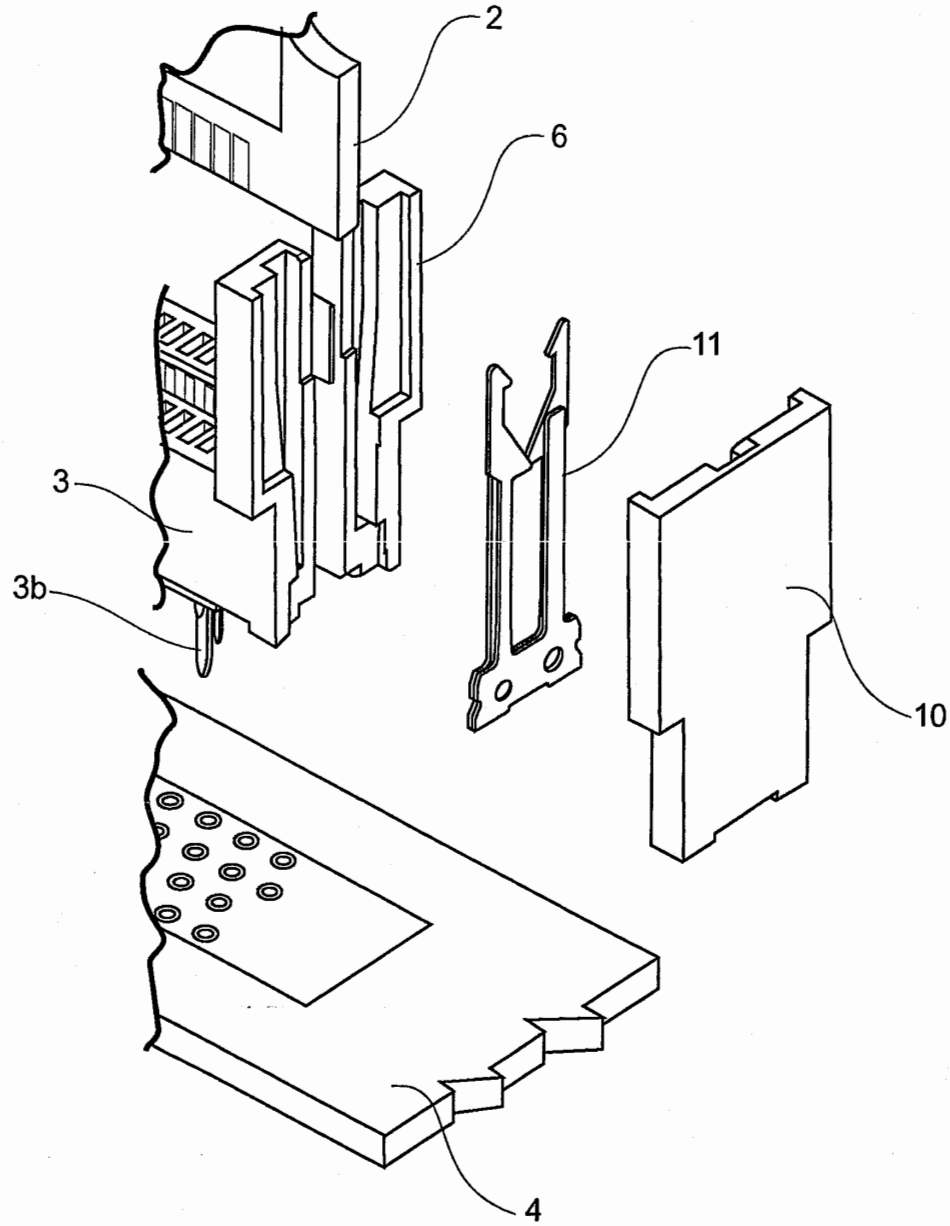

FIGURE 5

FIGURE 6

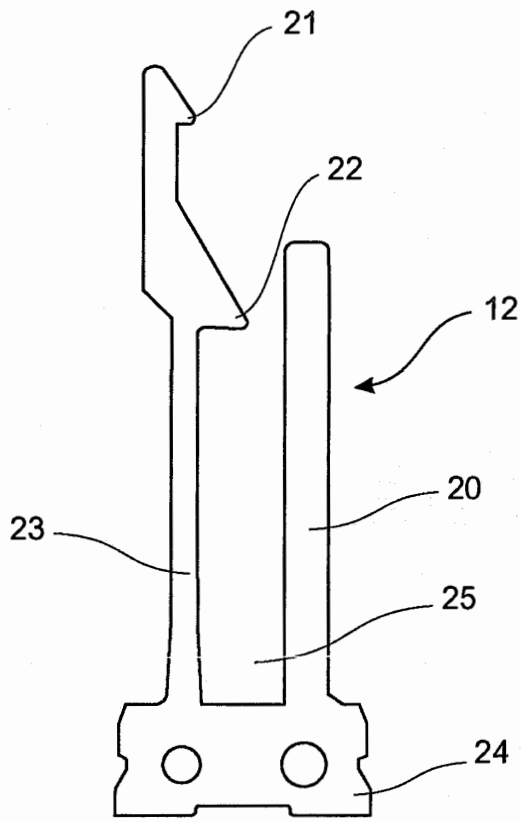

FIGURE 7

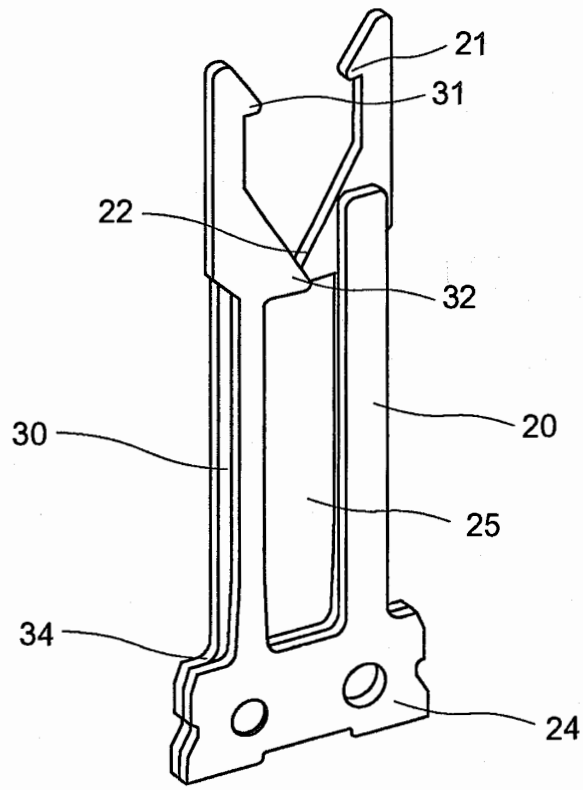

REPLACEMENT SHEET
11 APR 2005

FIGURE 8

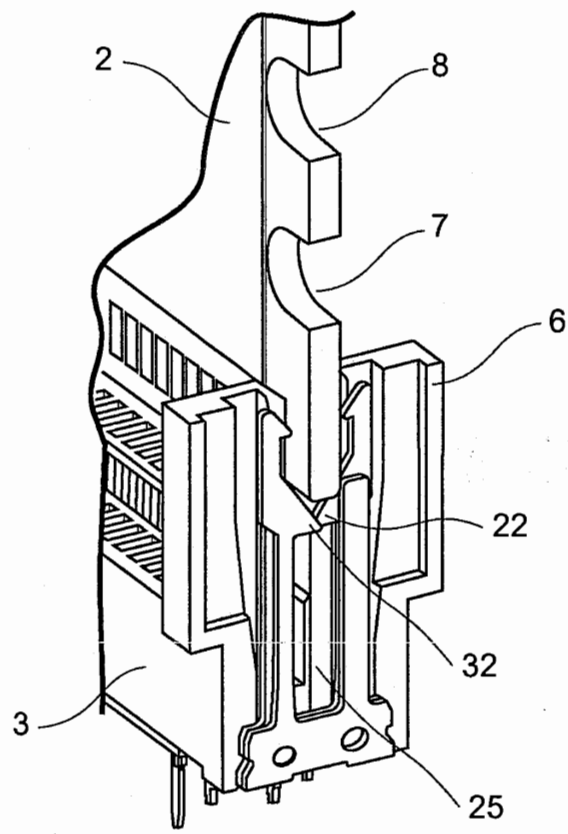

FIGURE 9

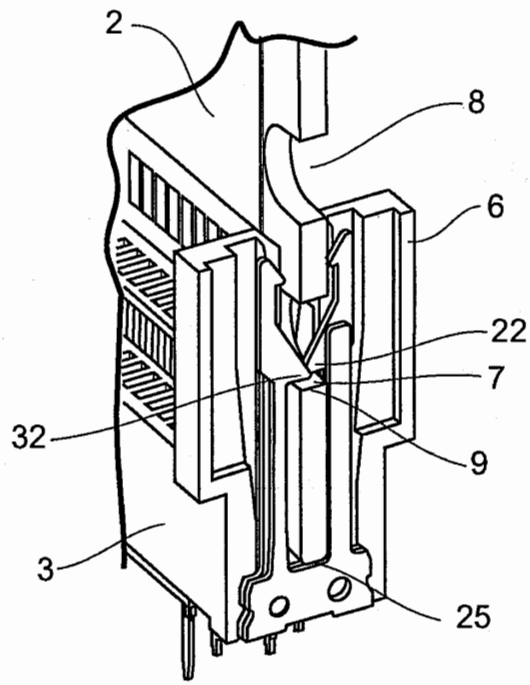

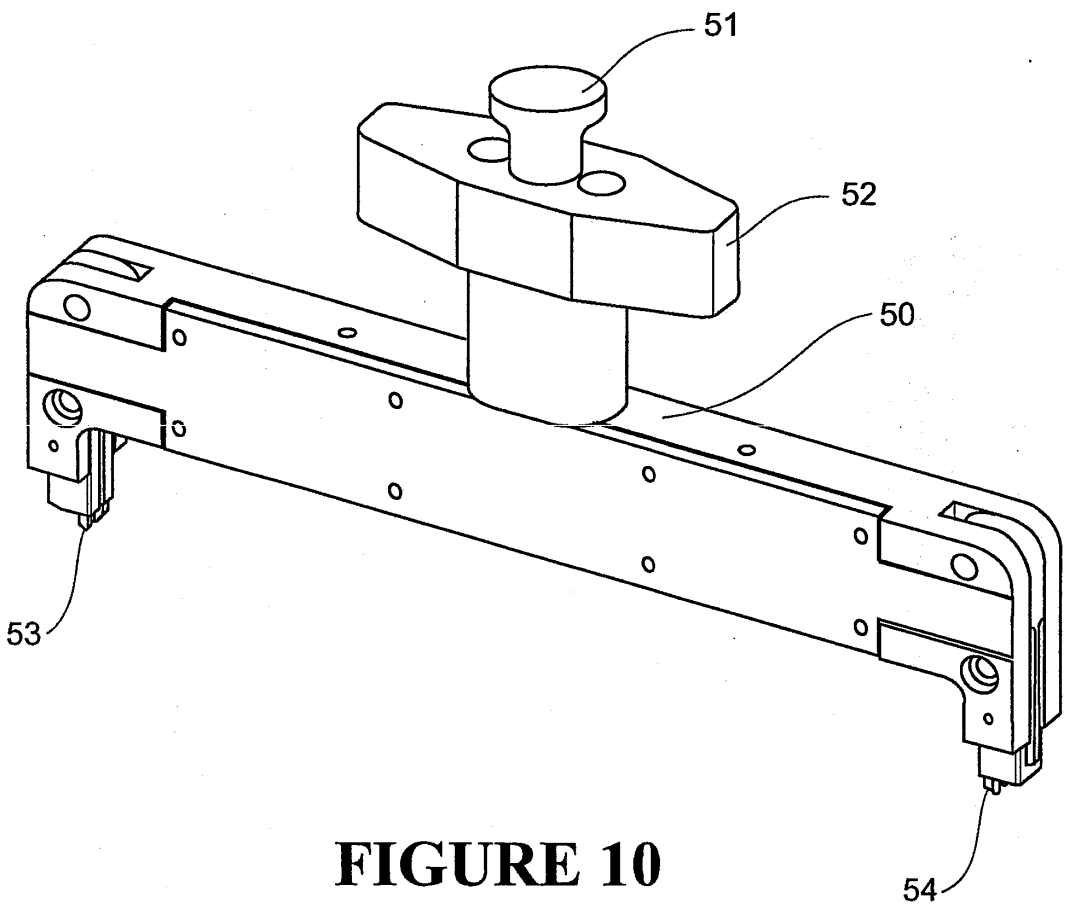

FIGURE 10

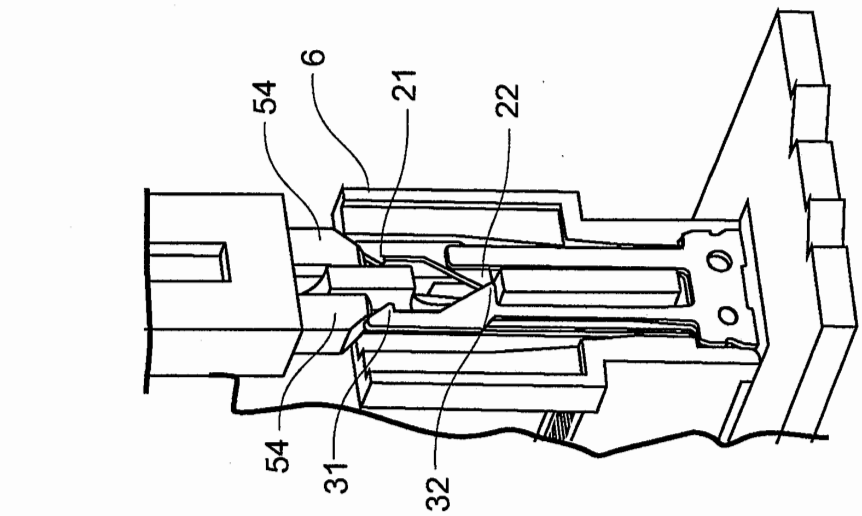

FIGURE 11B

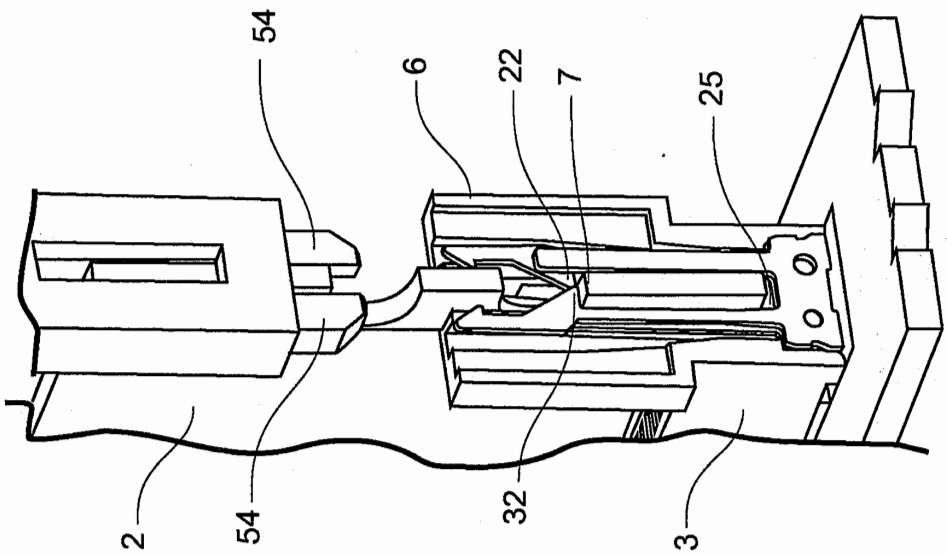

FIGURE 11A

REPLACEMENT SHEET

11 APR 2005

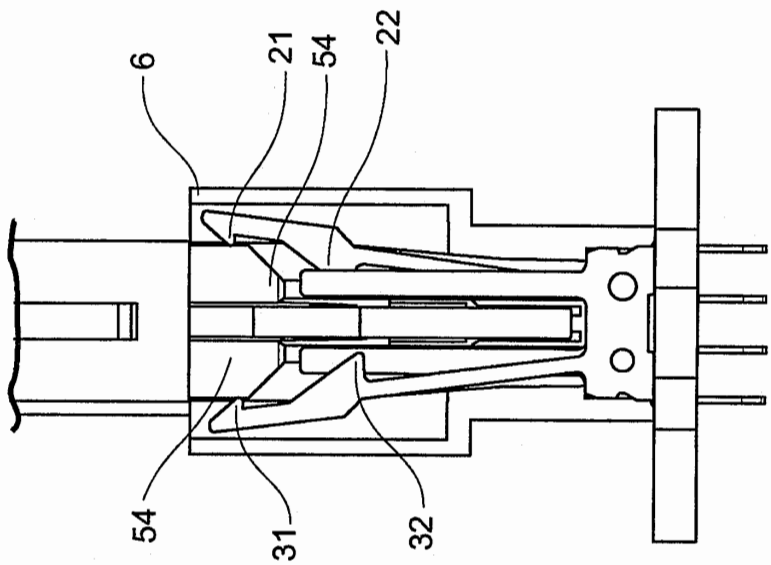

FIGURE 11D

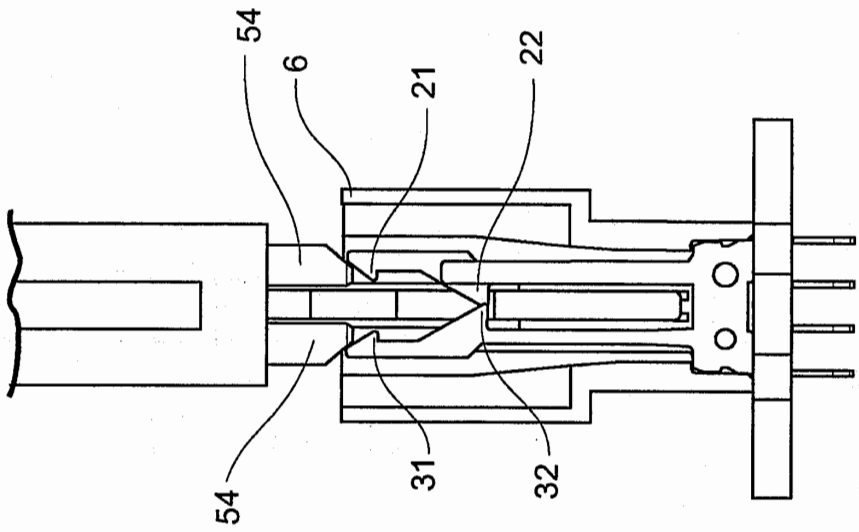

FIGURE 11C