Fig 1

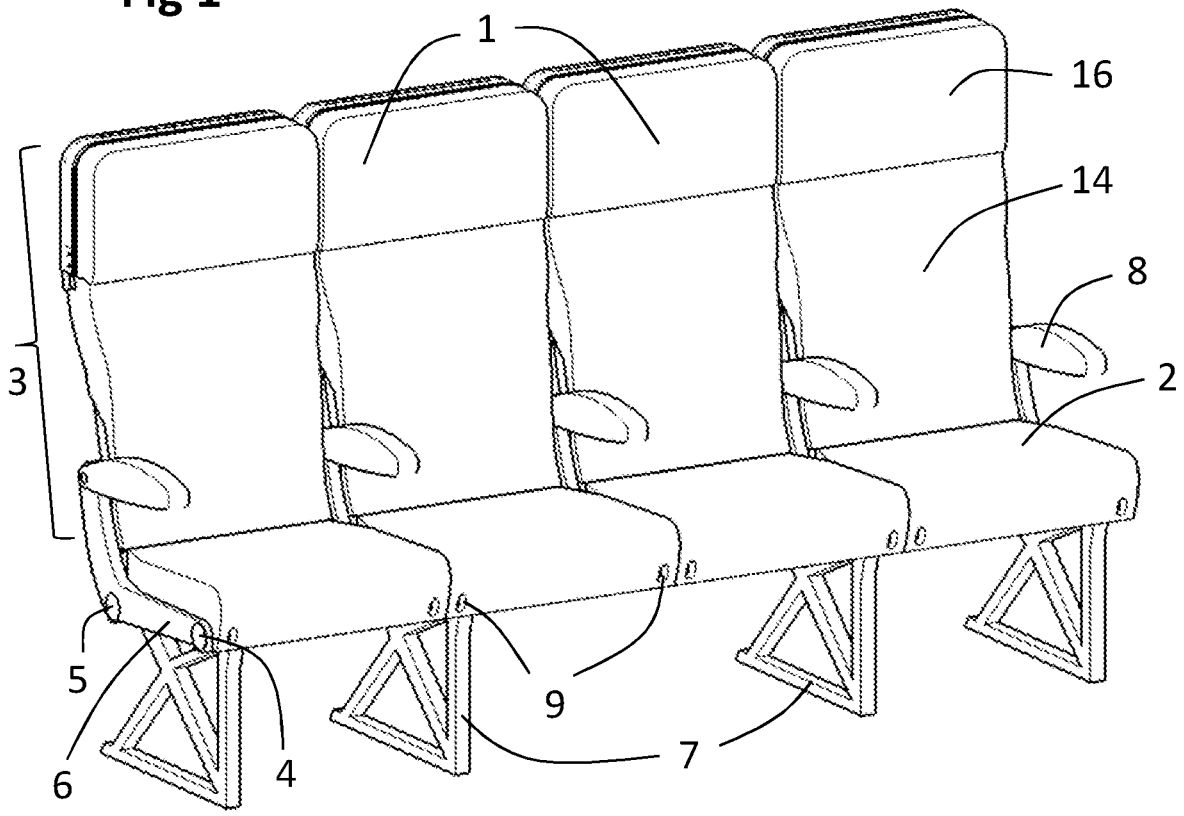

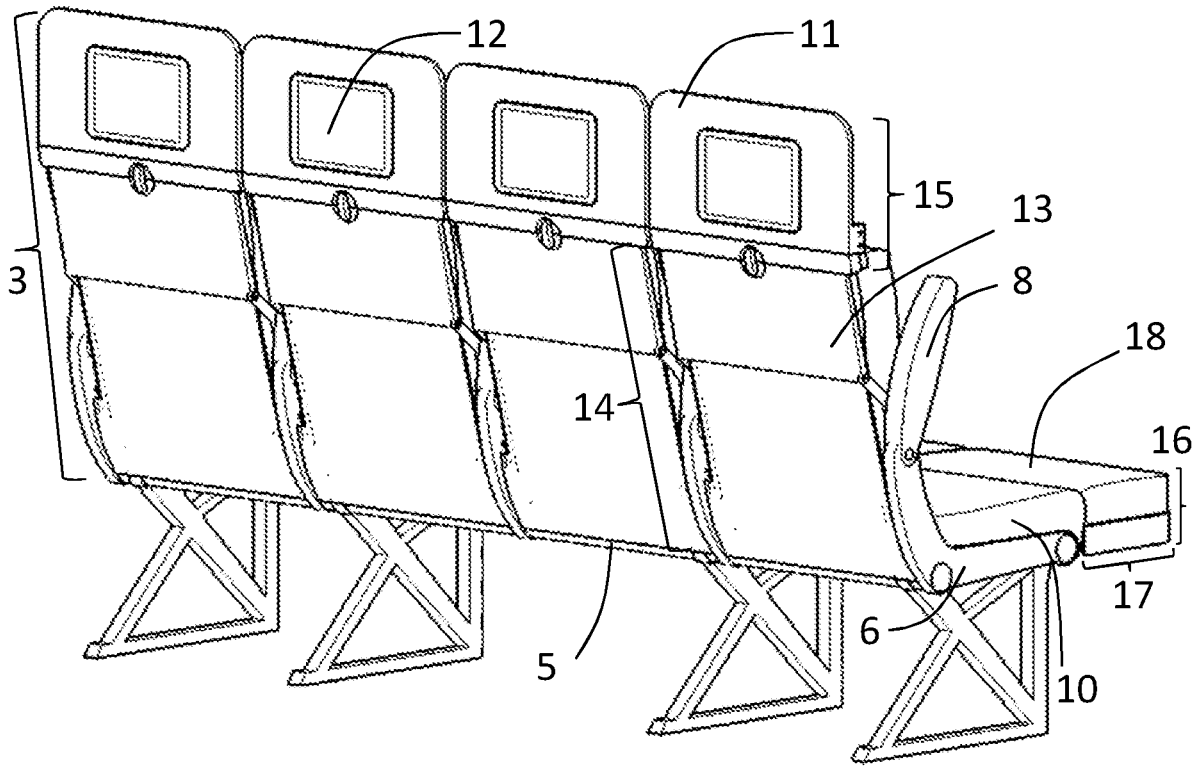

Fig 2

Fig 3

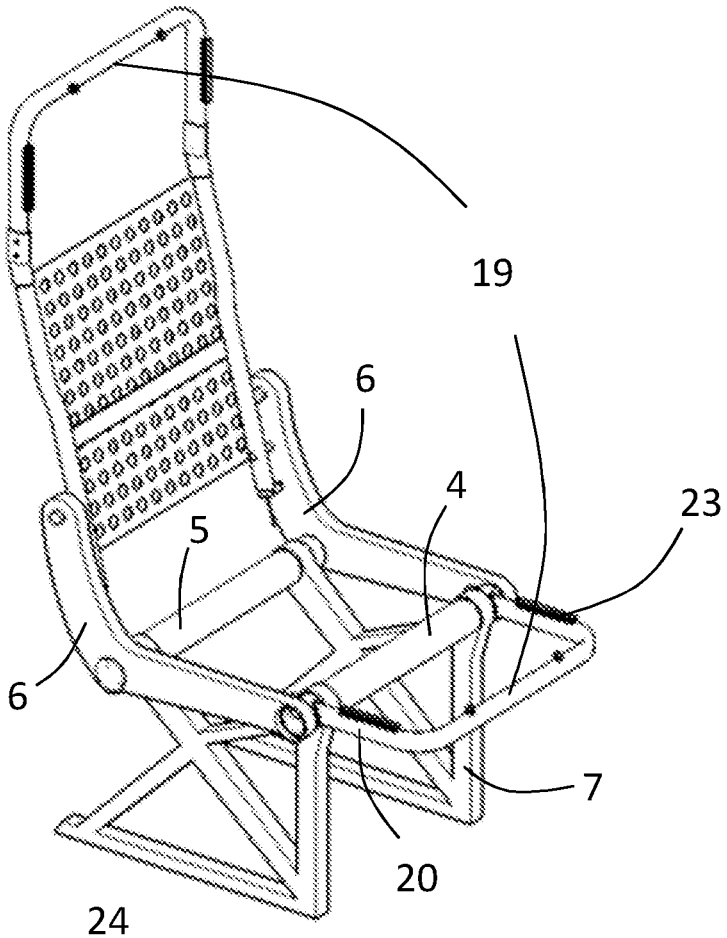

Fig 4

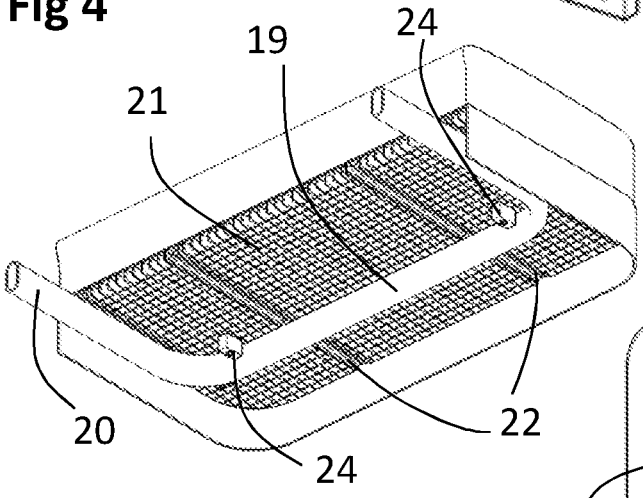

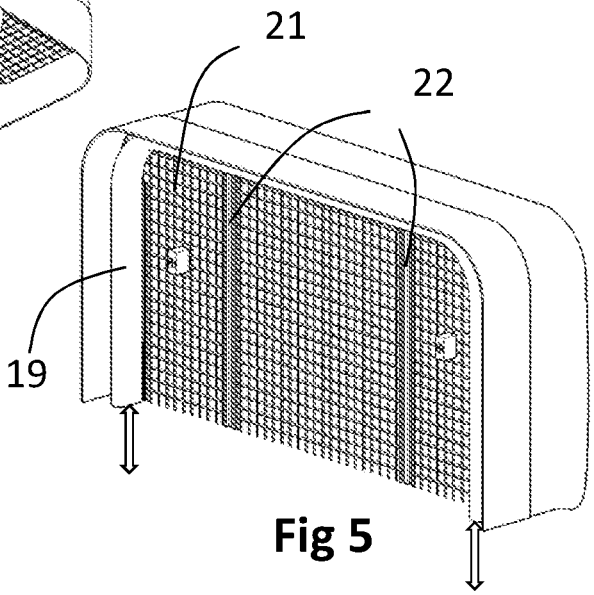

Fig 5

Fig 6

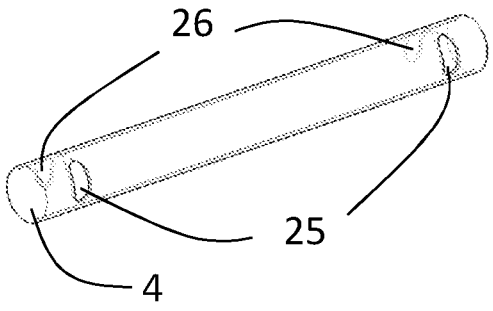

Fig 7

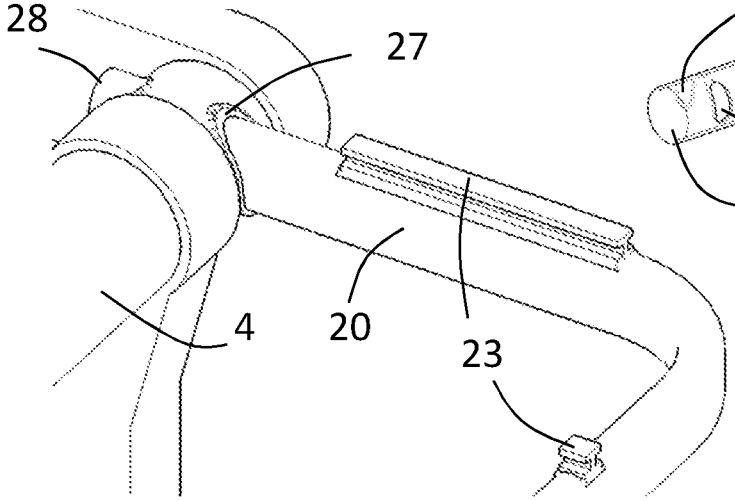

Fig 8

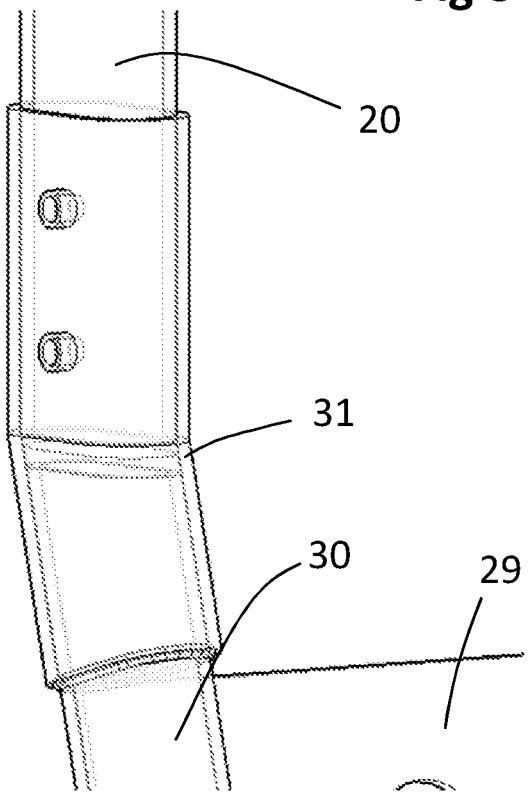

Fig 9

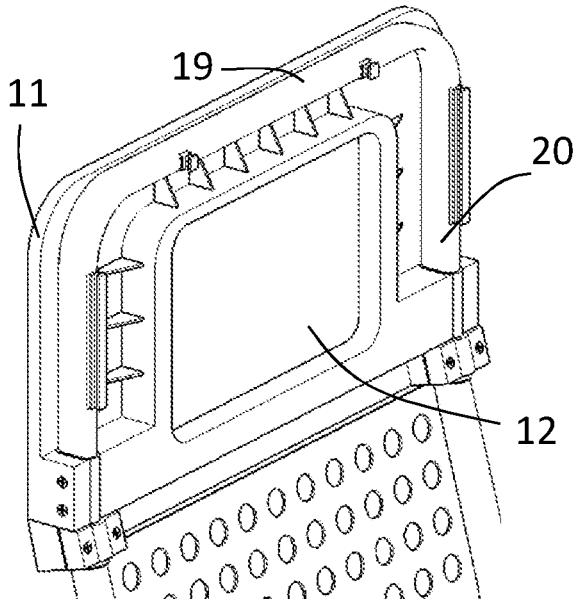

Fig 10

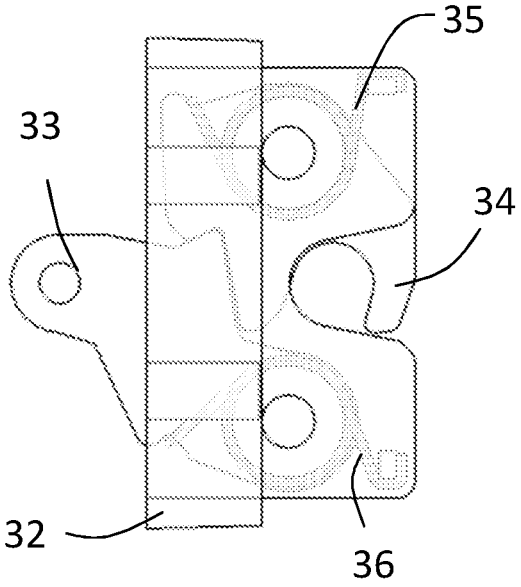

Fig 11

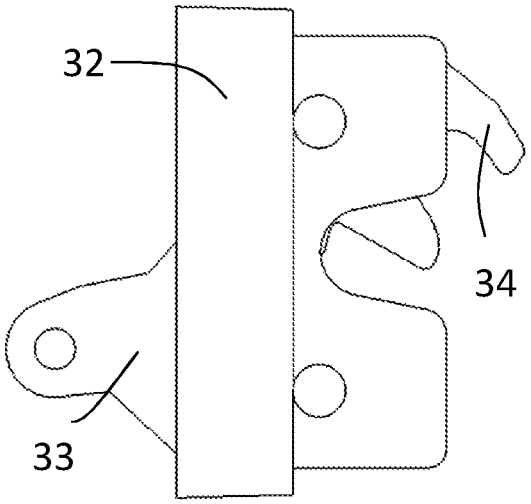

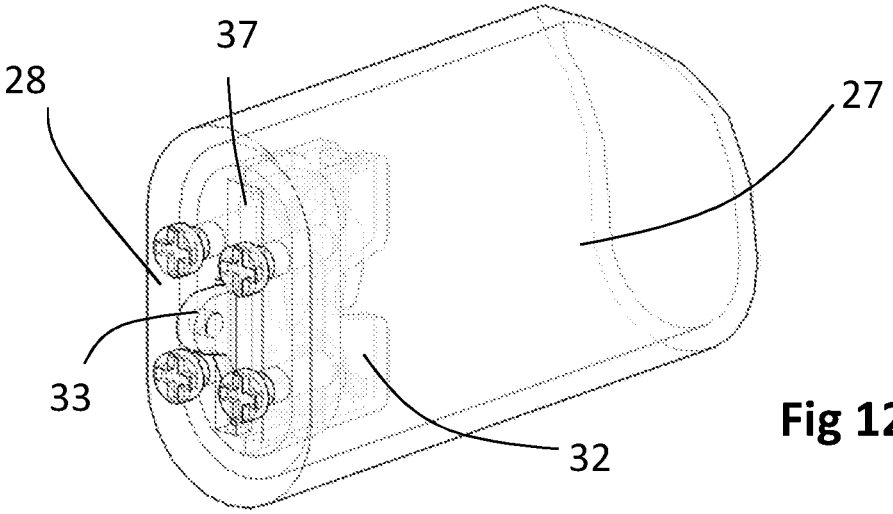

Fig 12

Fig 13

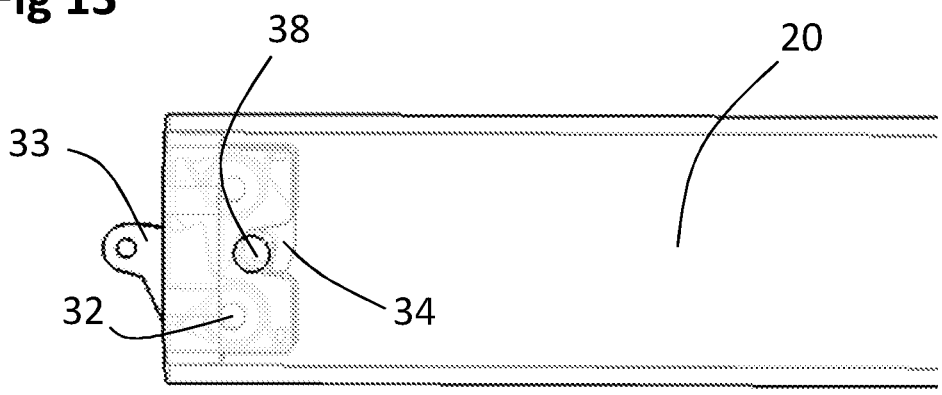

Fig 14

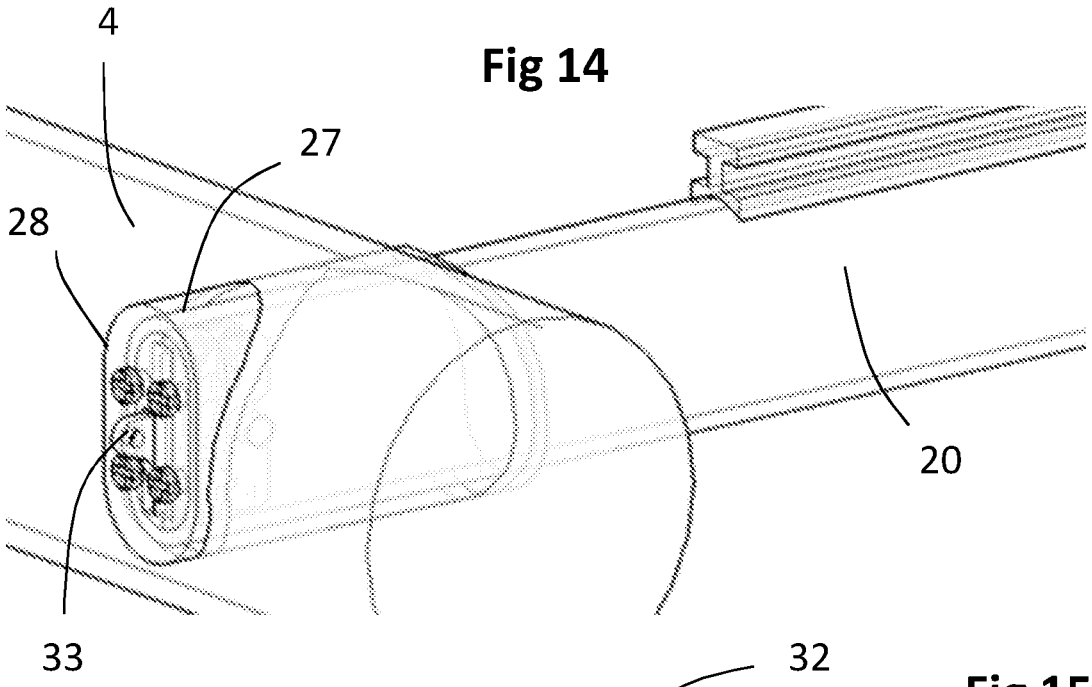

Fig 15

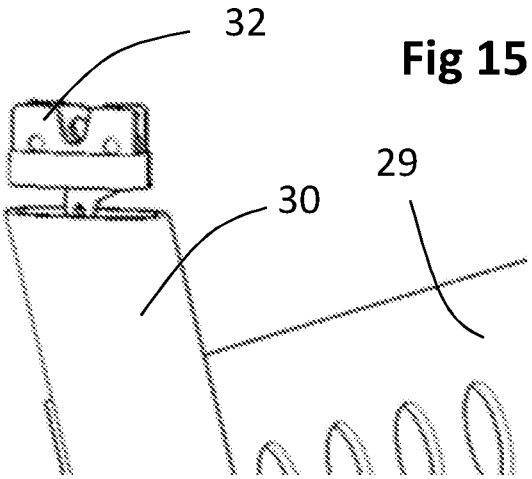

Fig 16

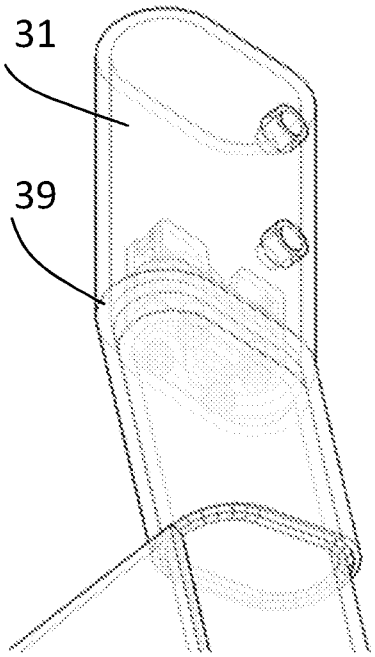

Fig 17

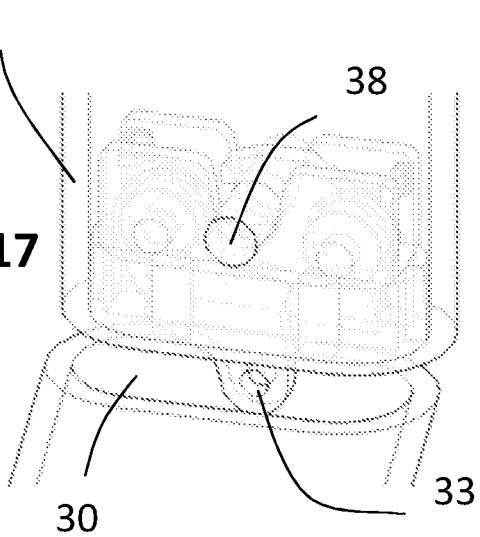

Fig 18

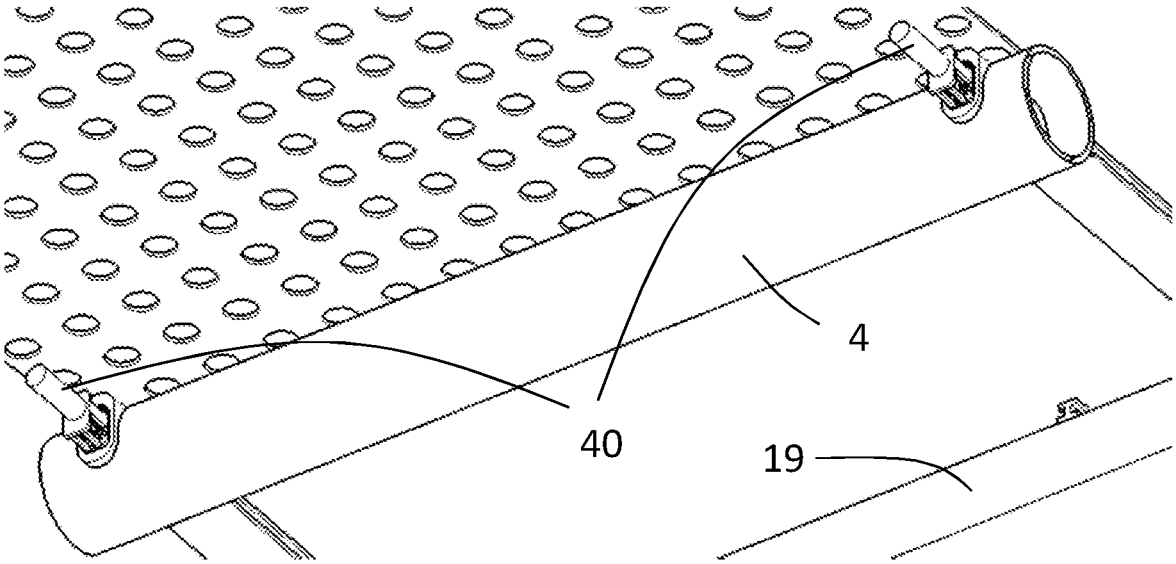

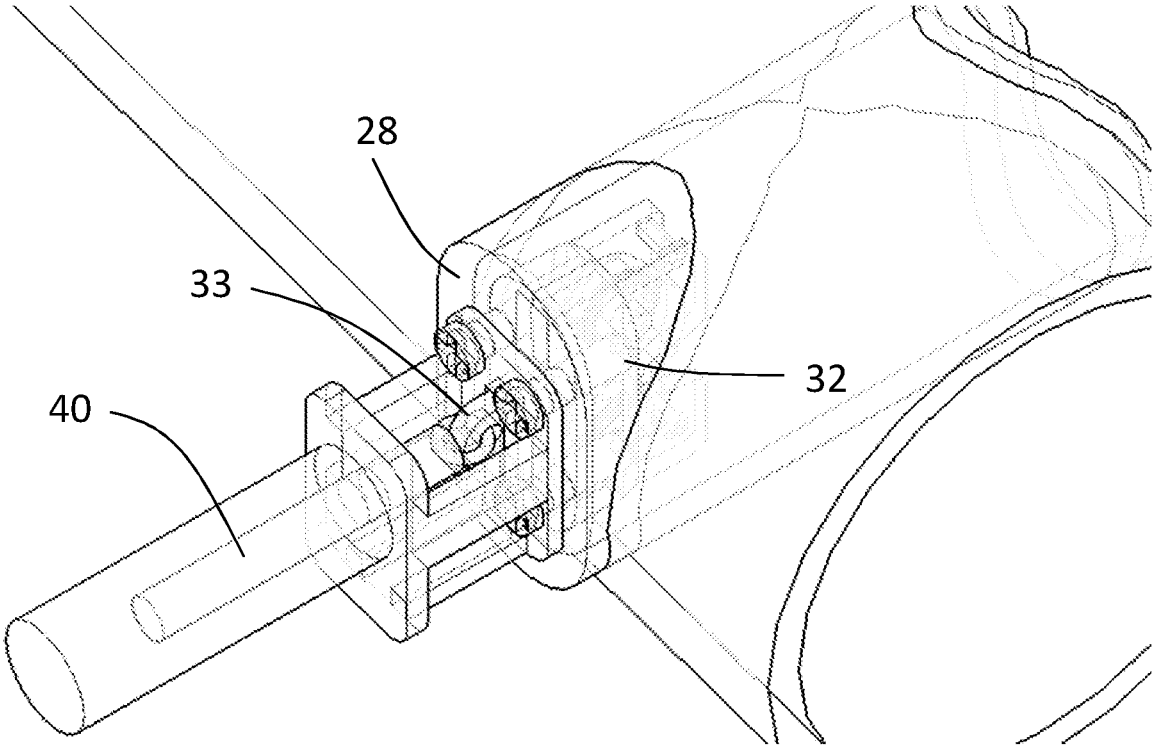

Fig 19

Fig 20

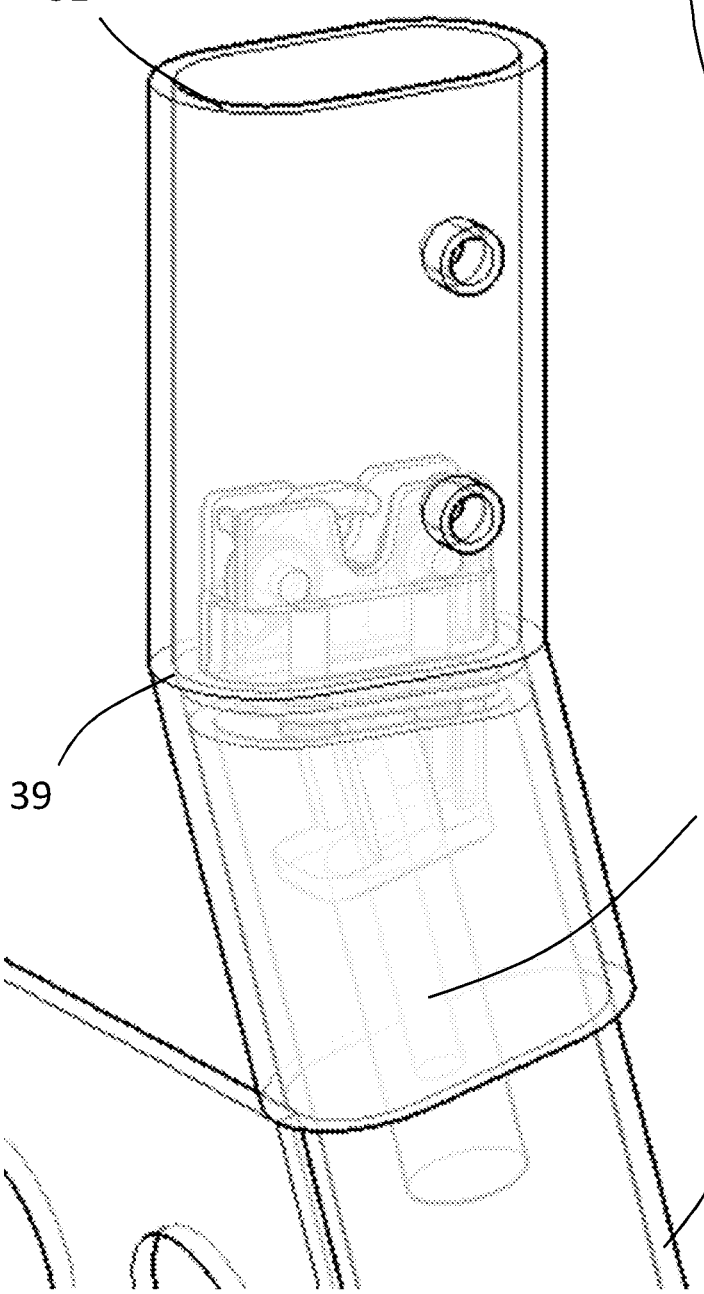

Fig 21

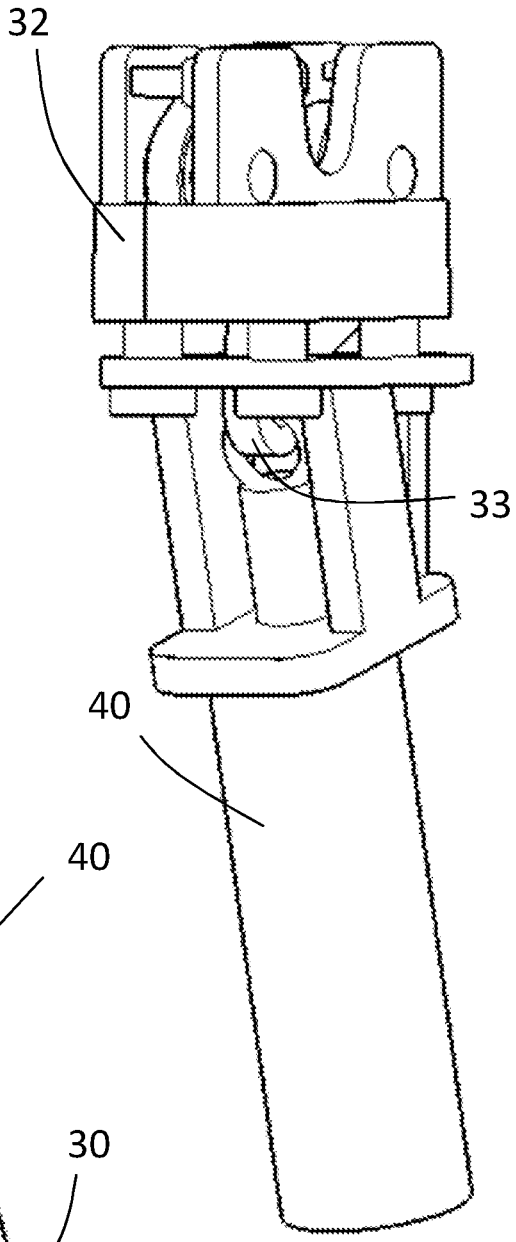

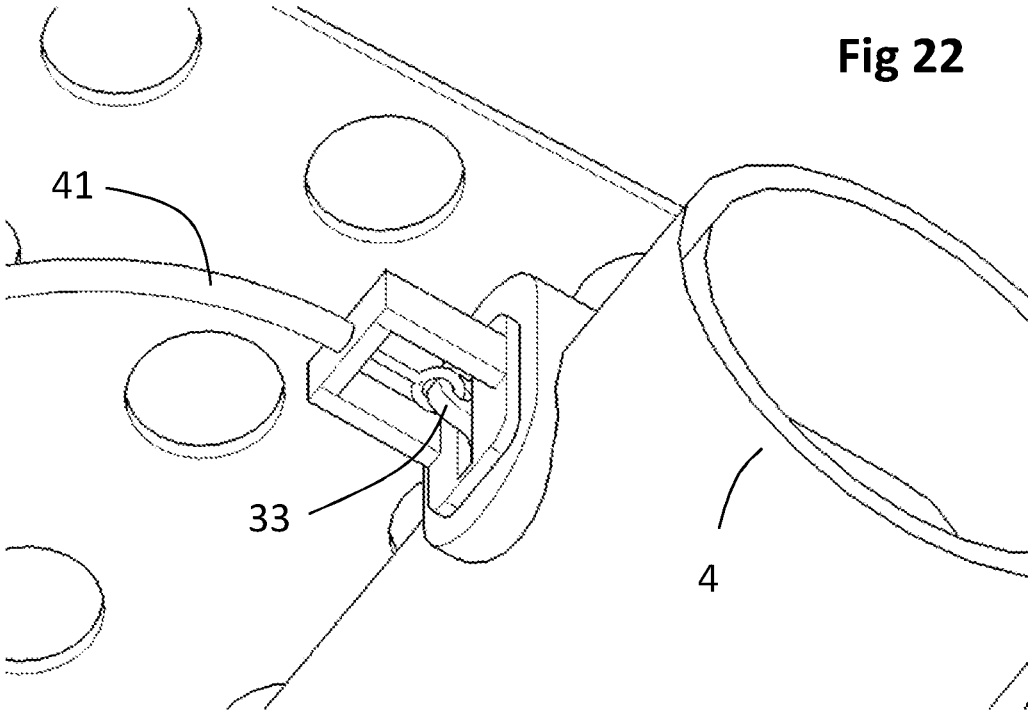

Fig 22

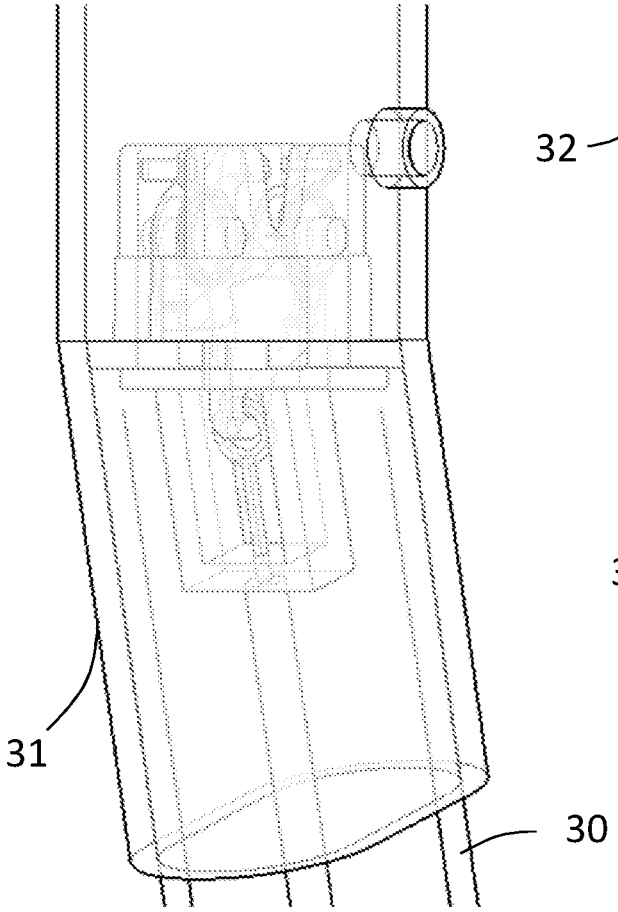

Fig 23

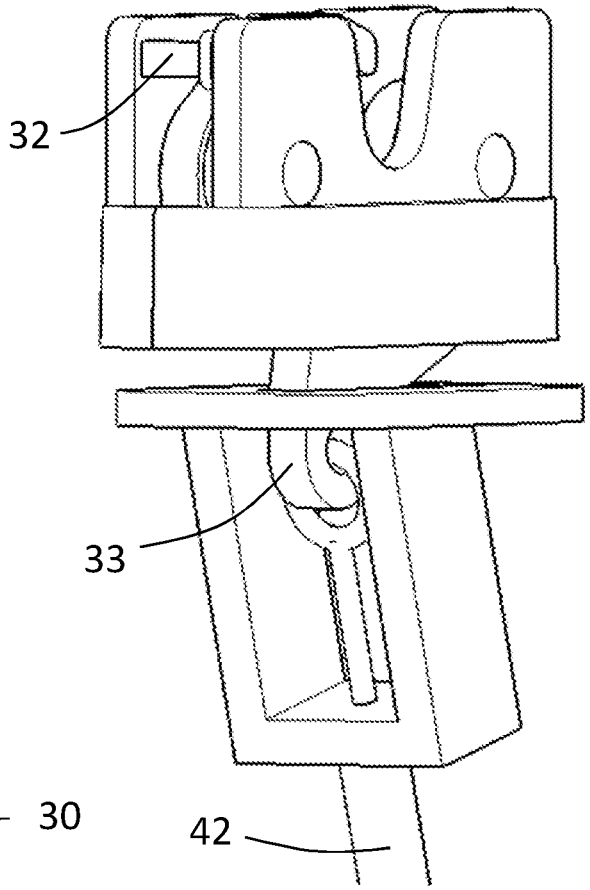

Fig 24

Fig 25

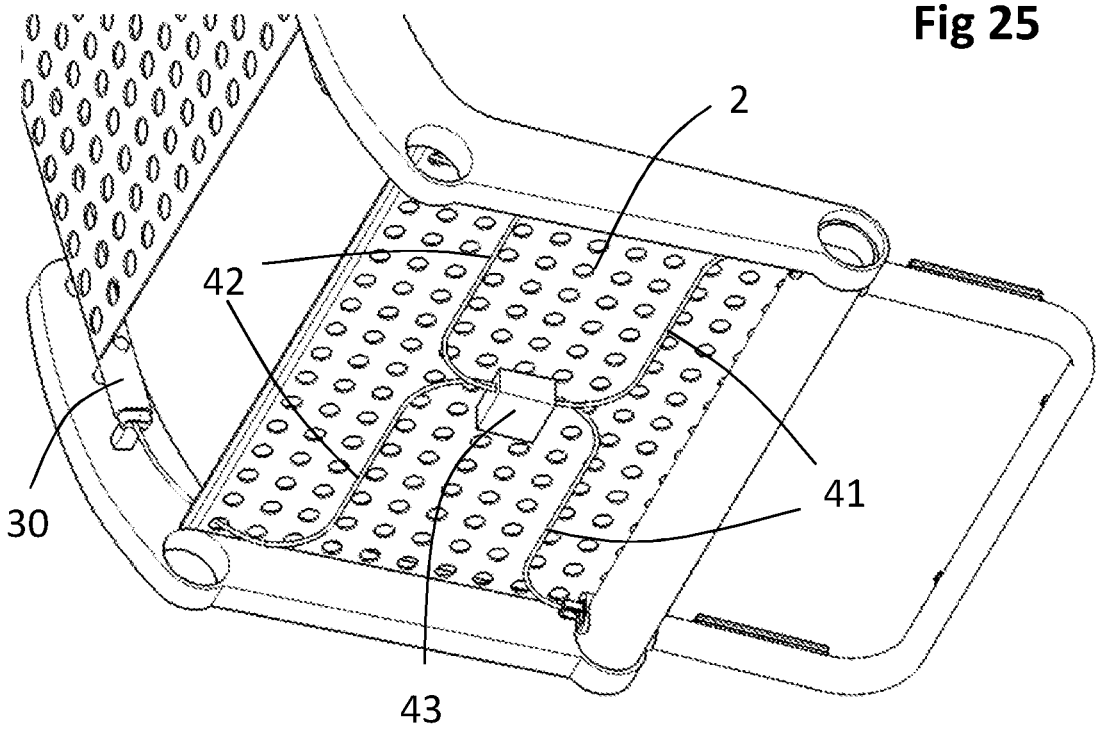

Fig 26

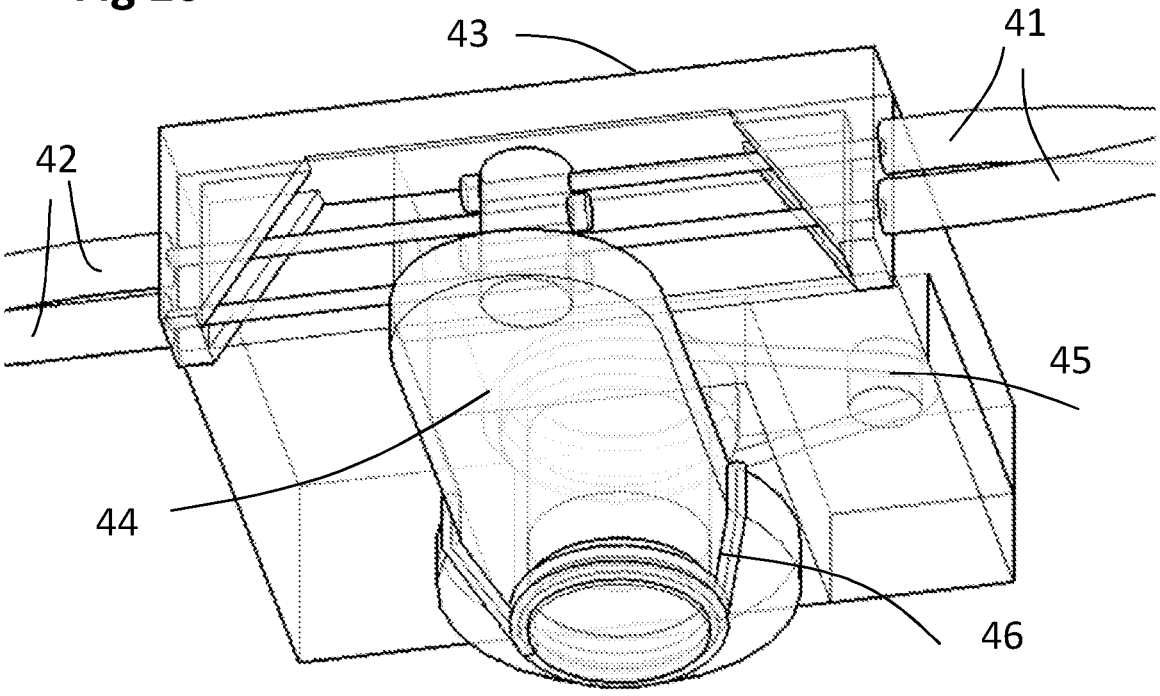

Fig 27

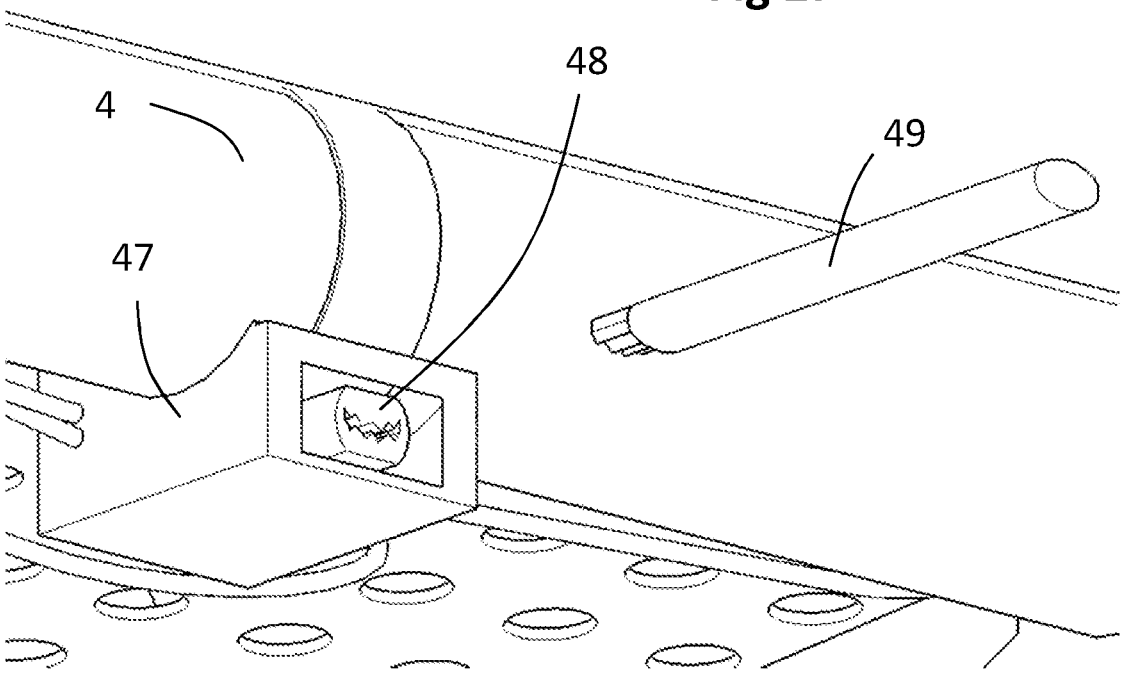

Fig 28

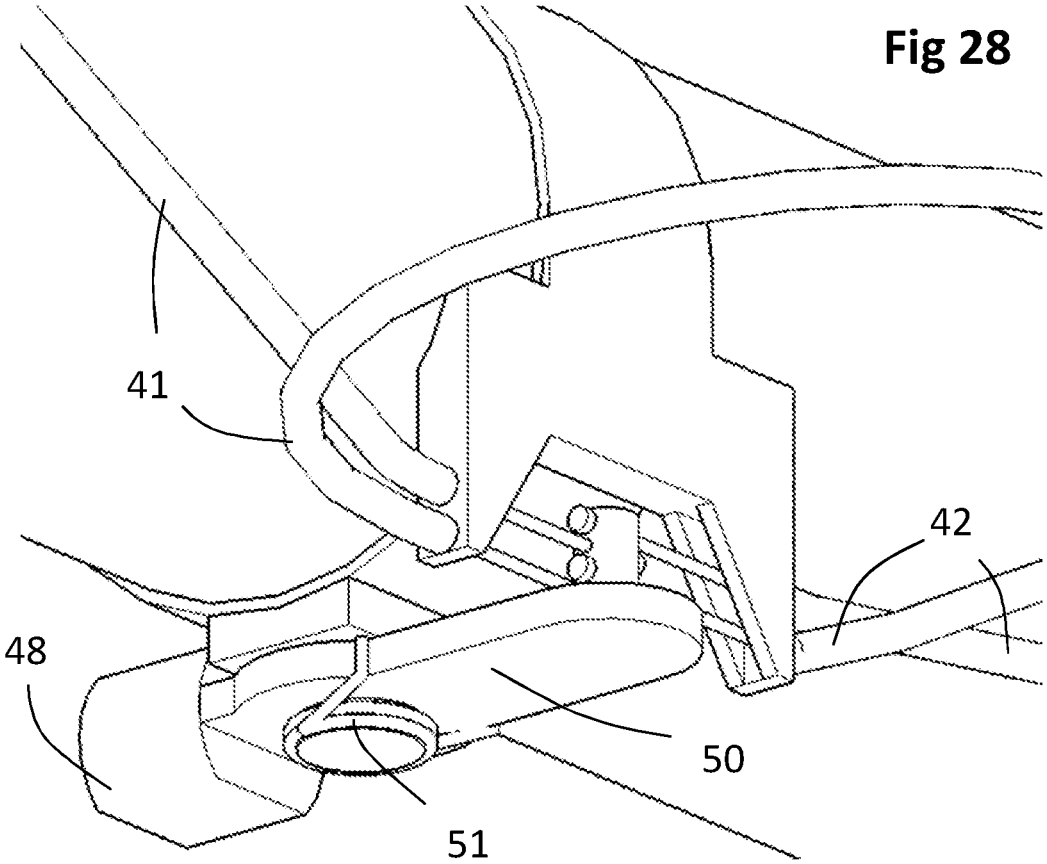

Fig 29

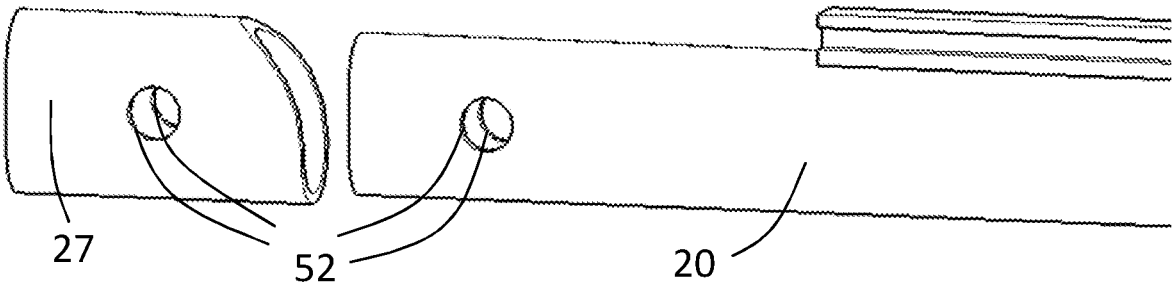

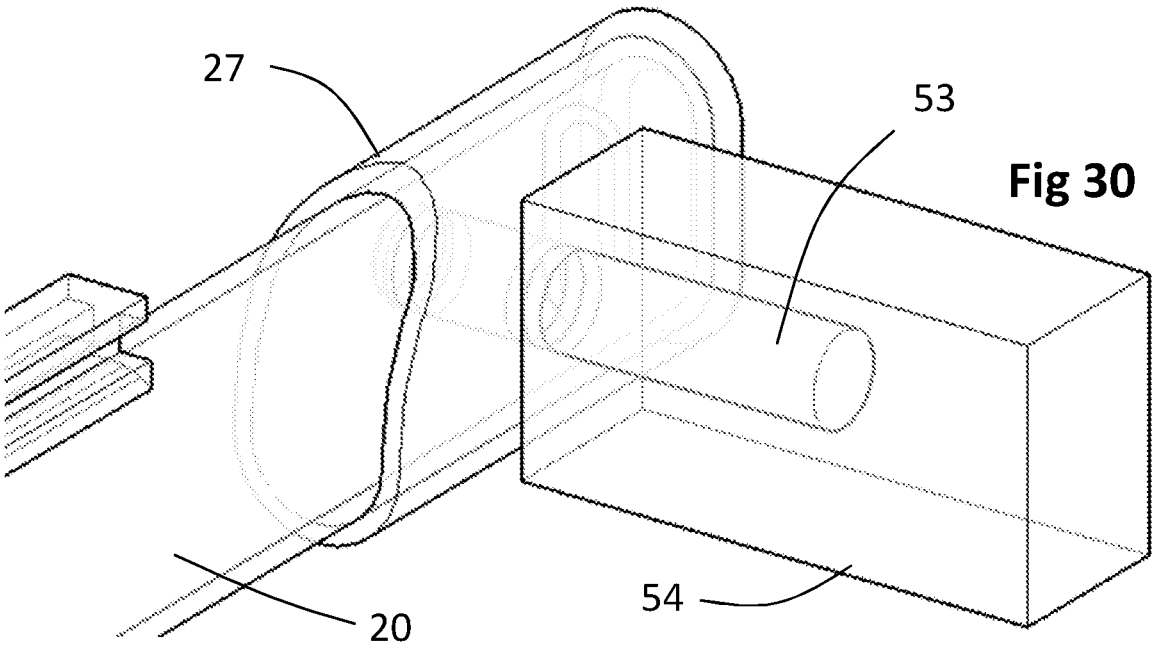

Fig 30

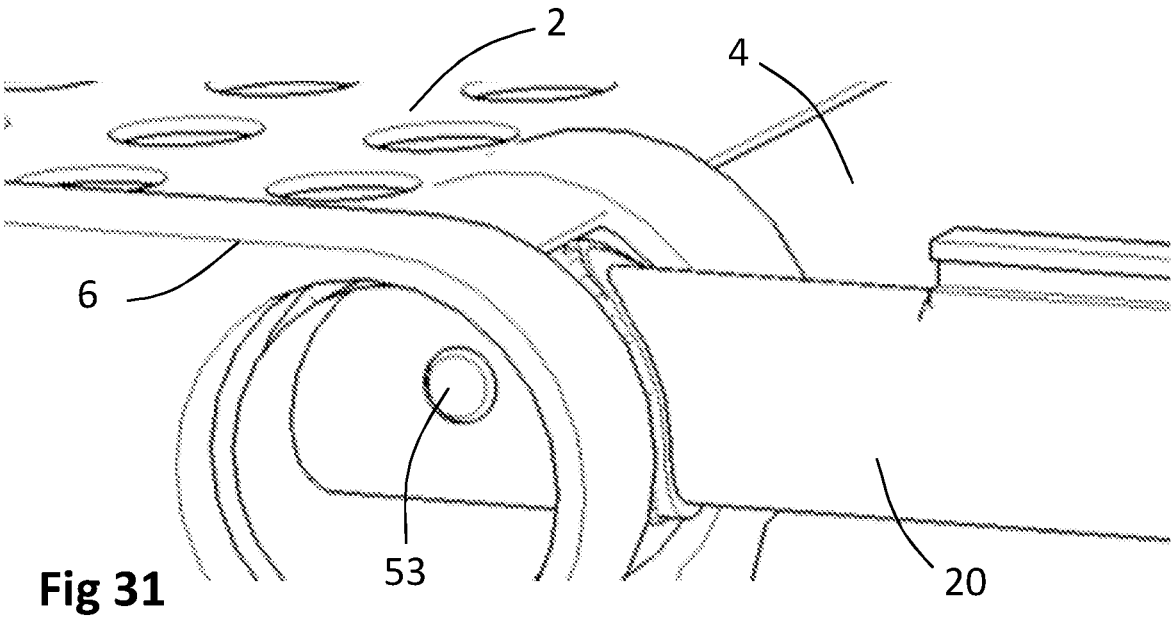

Fig 31

Fig 32

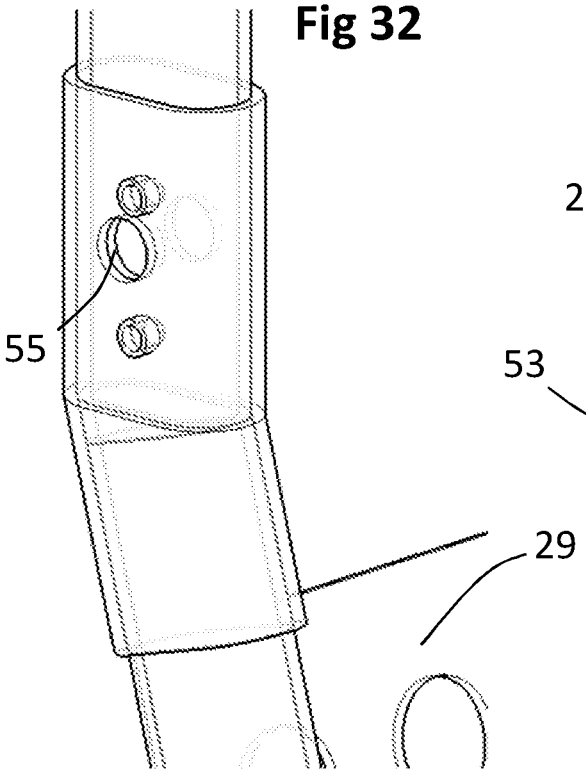

Fig 33

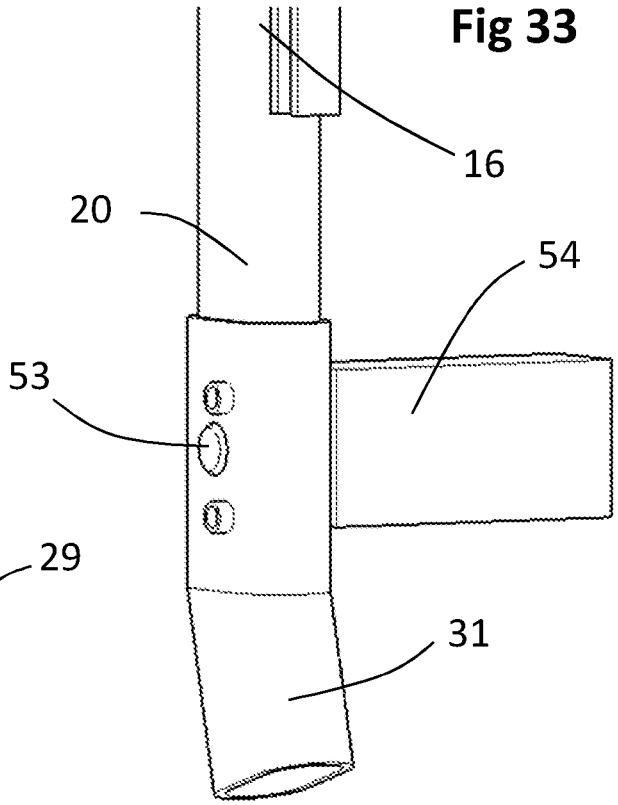

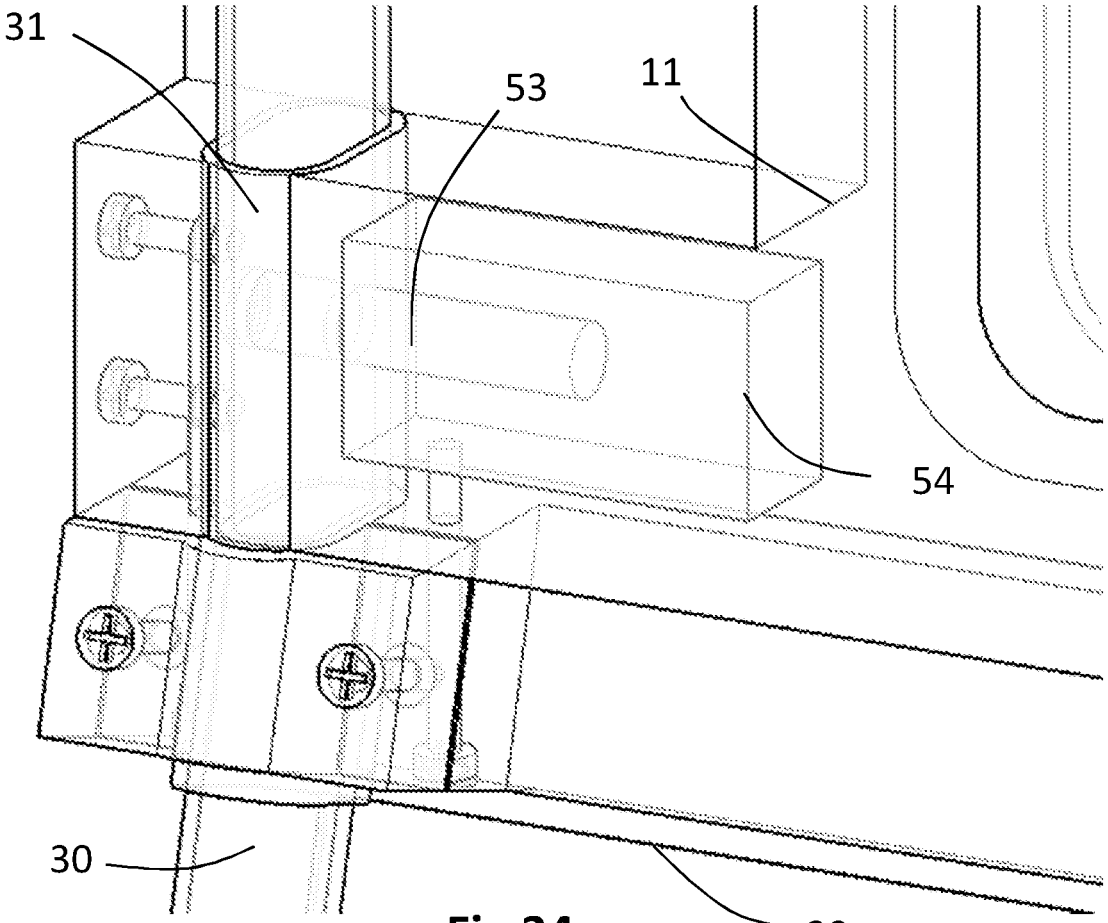

Fig 34

Fig 35

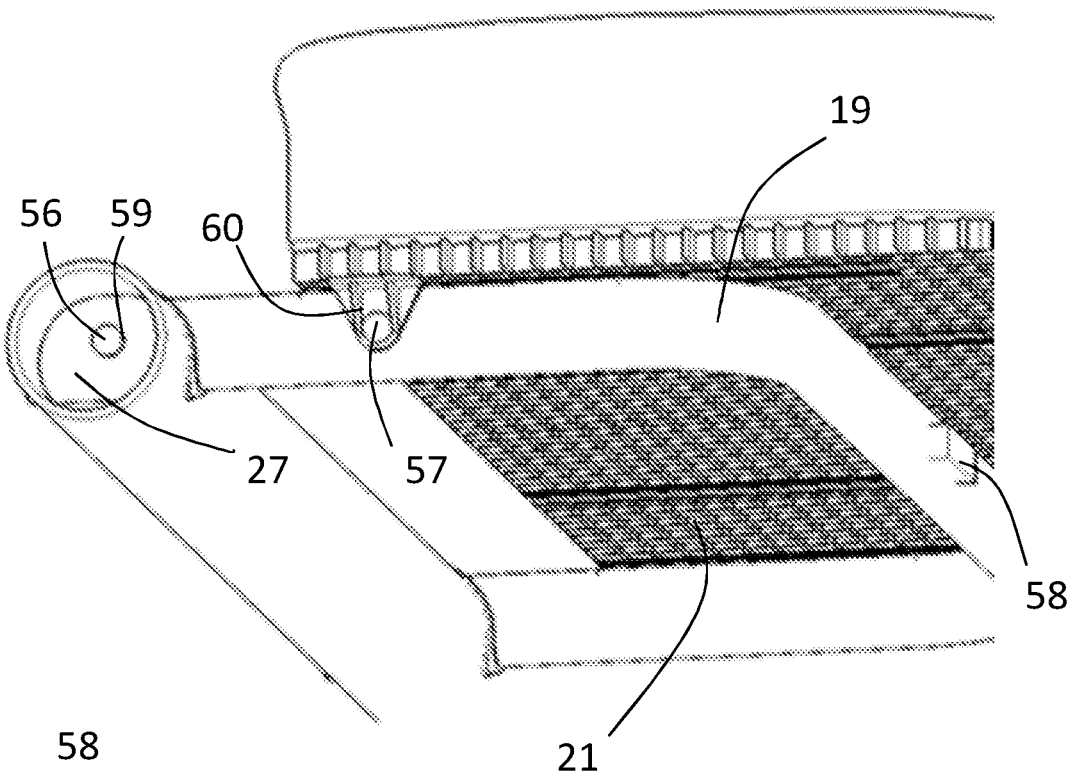

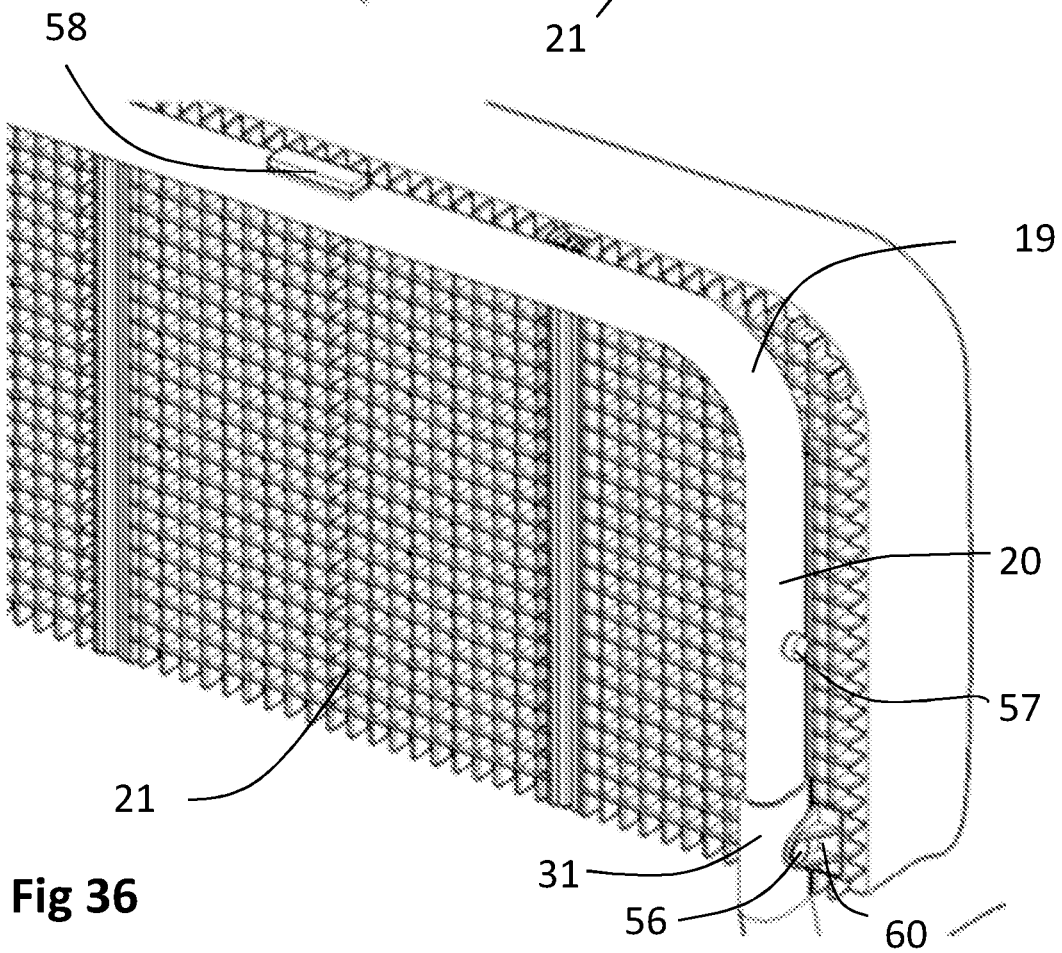

Fig 36

Fig 37

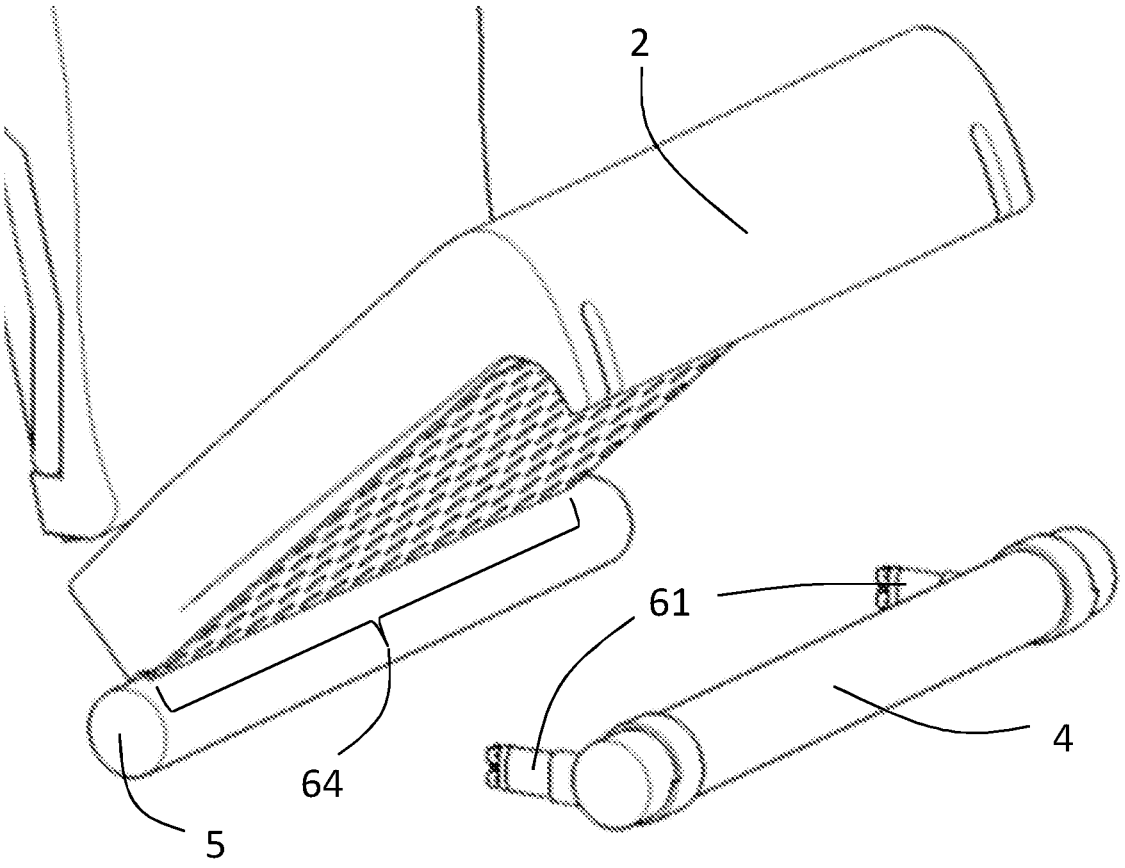

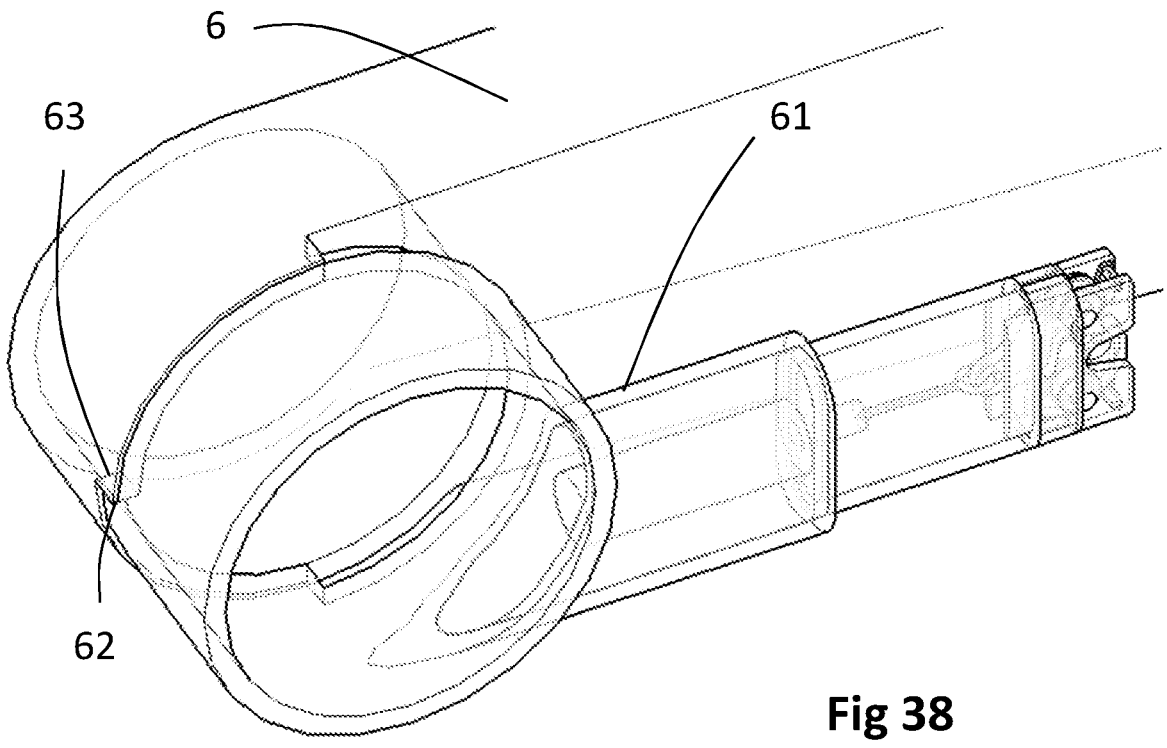

Fig 38

Fig 39

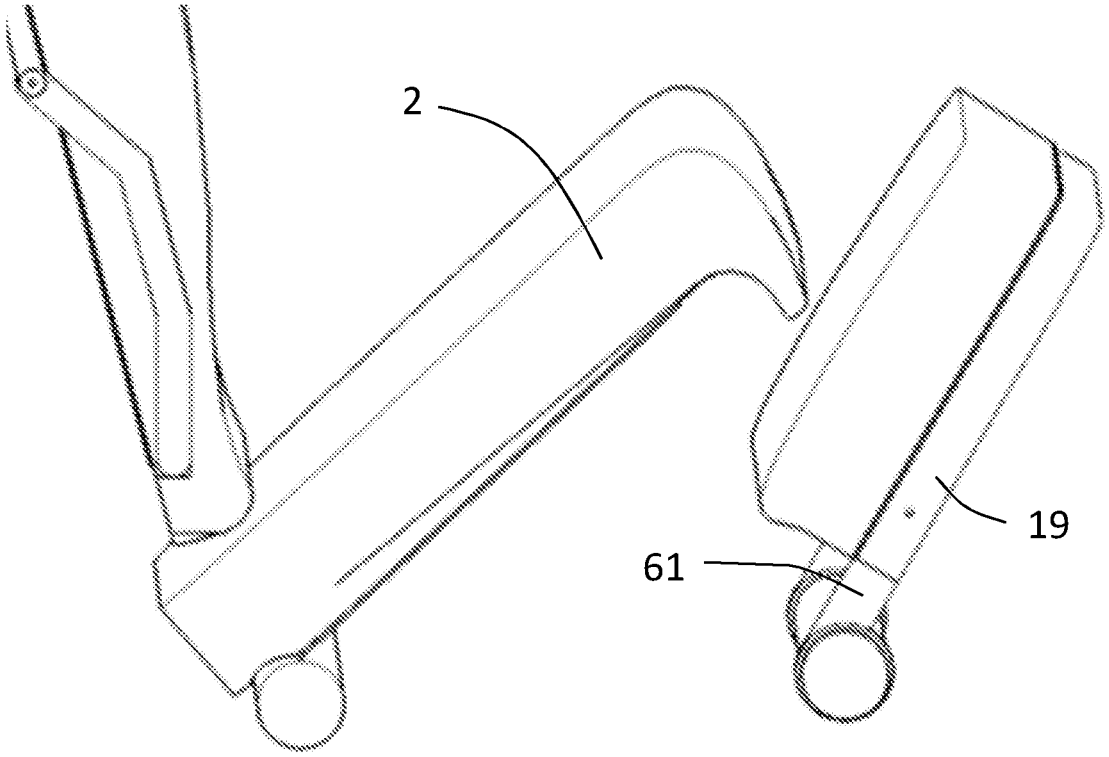

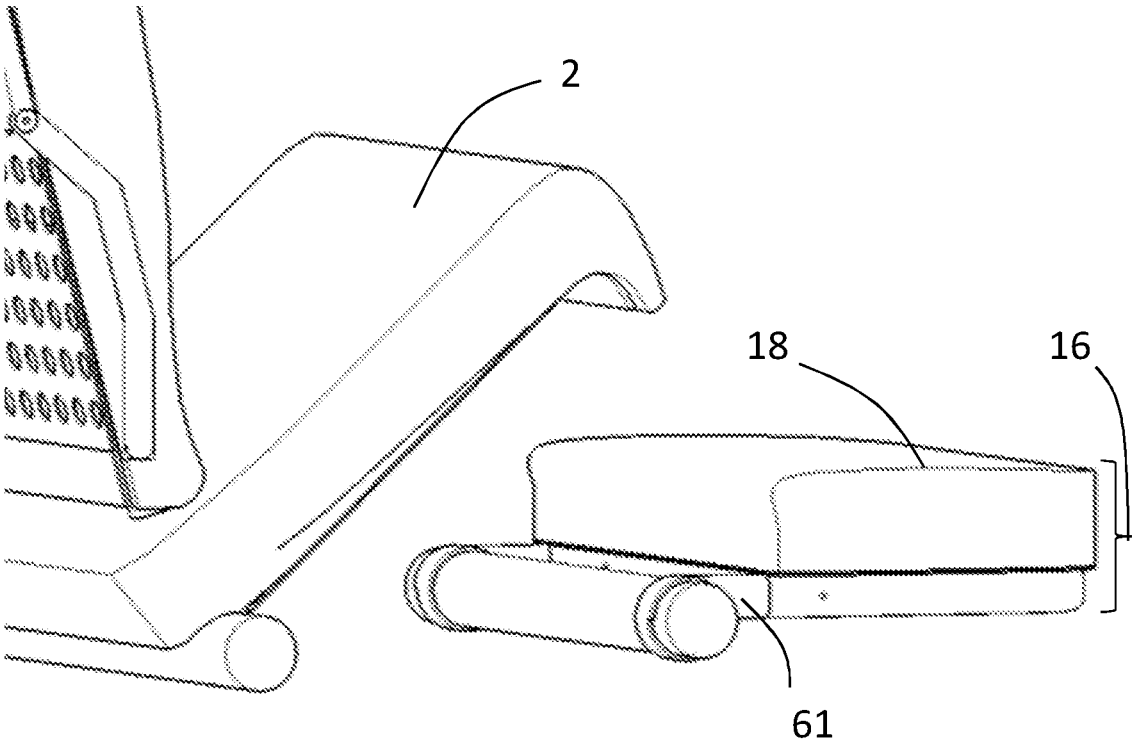

Fig 40

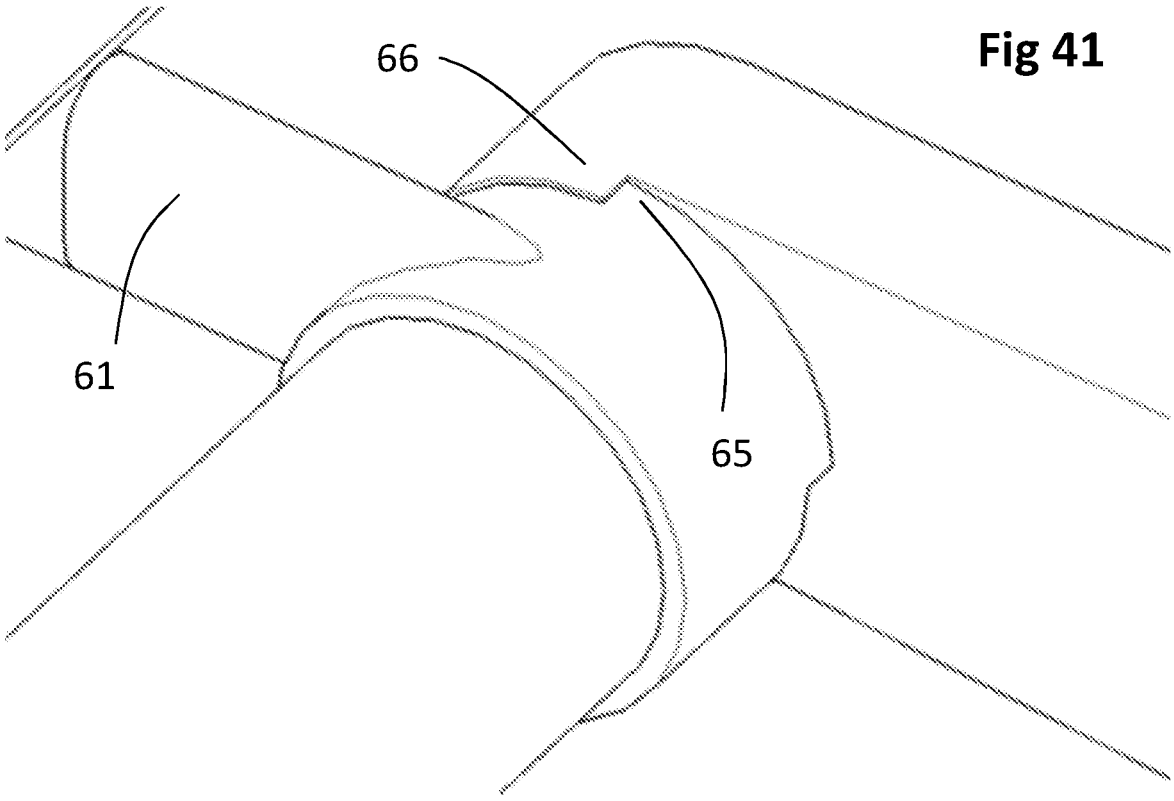

Fig 41

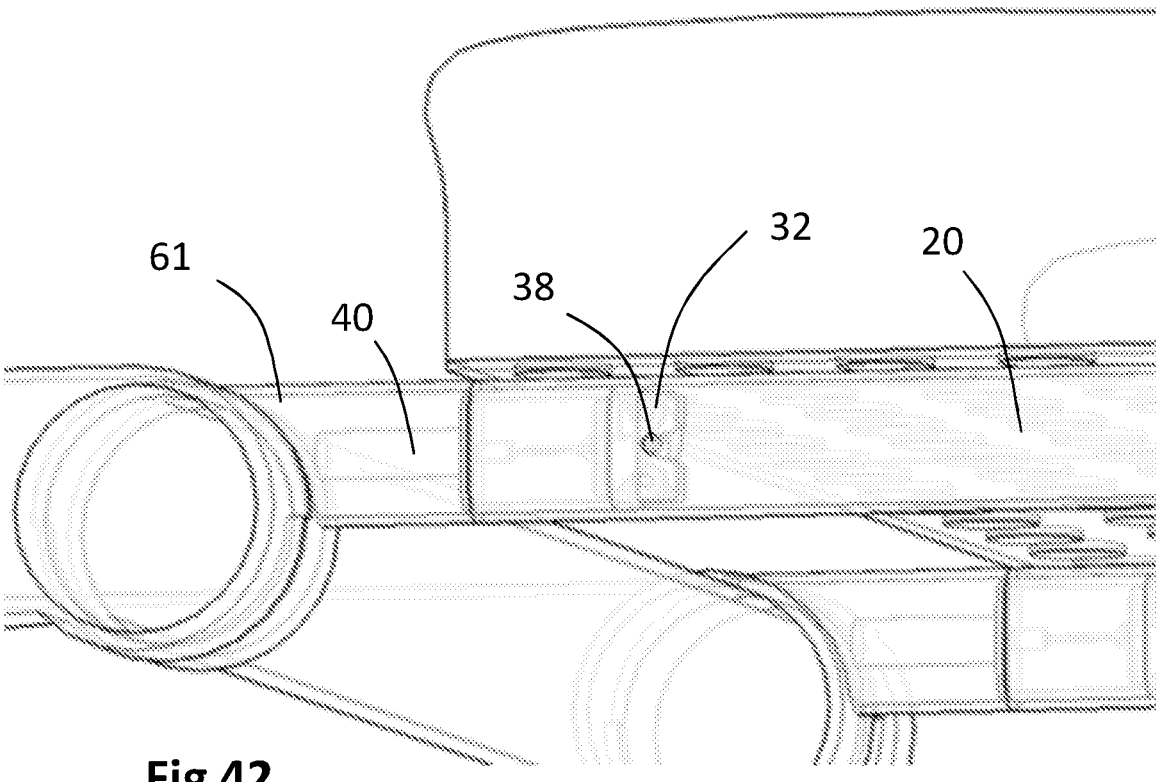

Fig 42

Fig 43

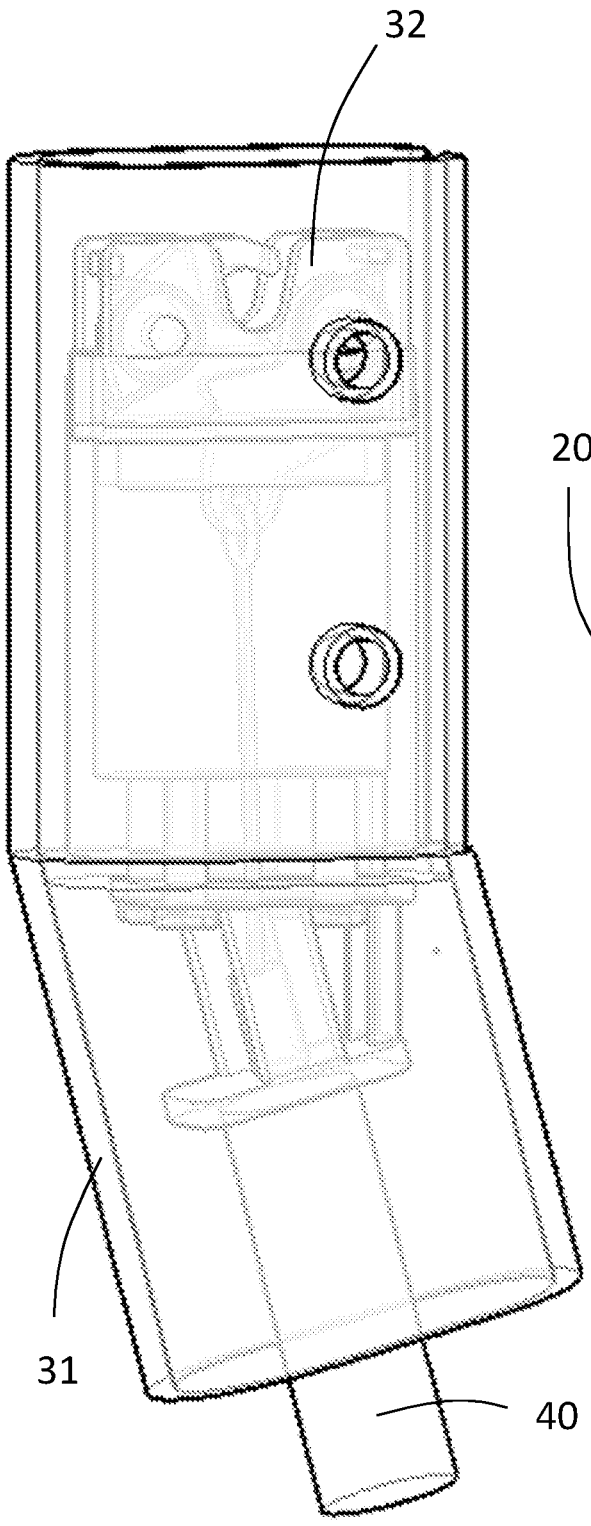

Fig 44

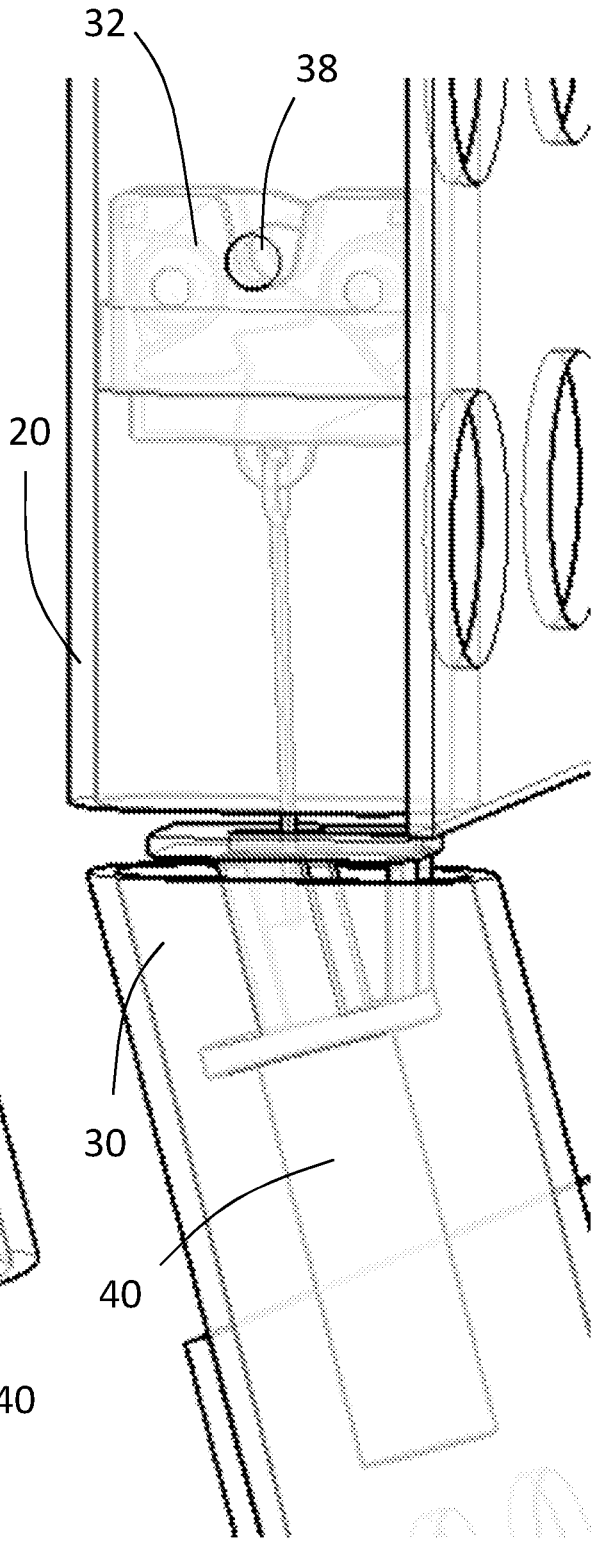

Fig 45

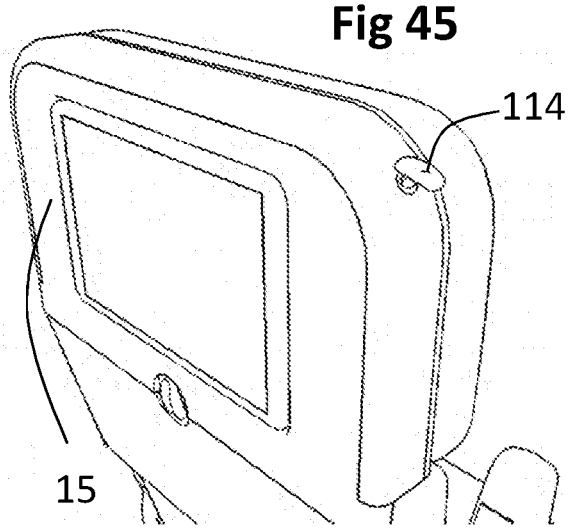

Fig 46

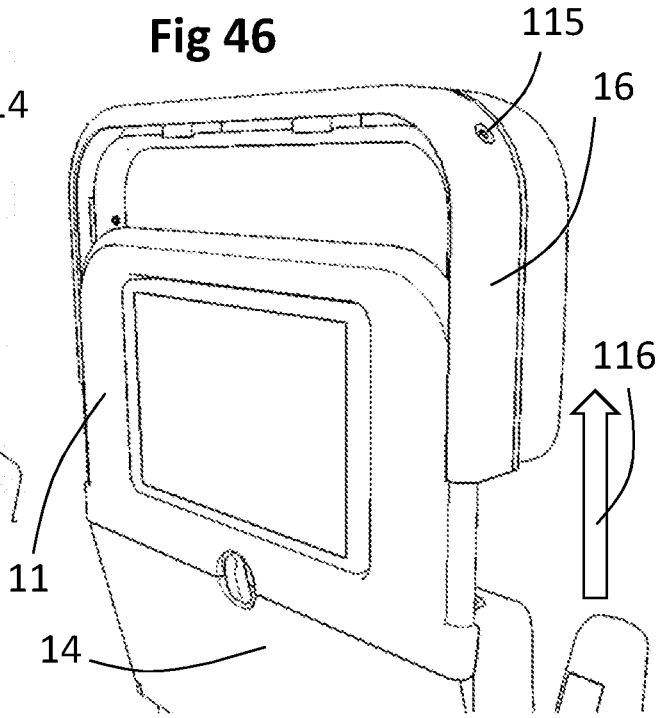

Fig 47

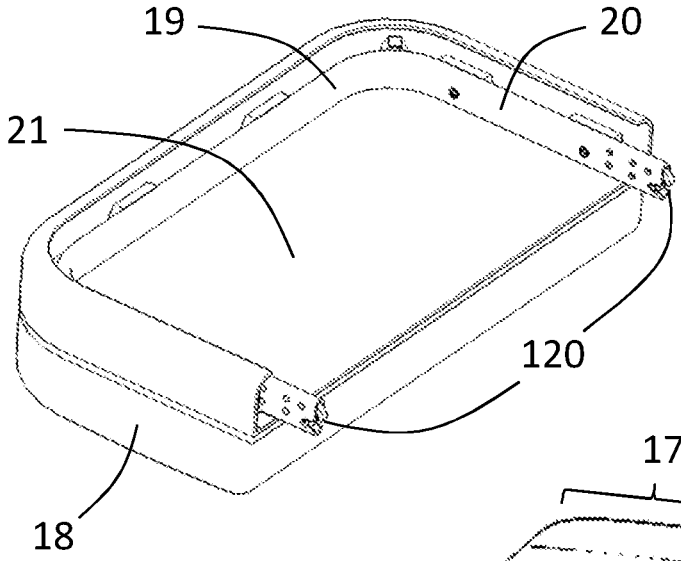

Fig 48

Fig 49

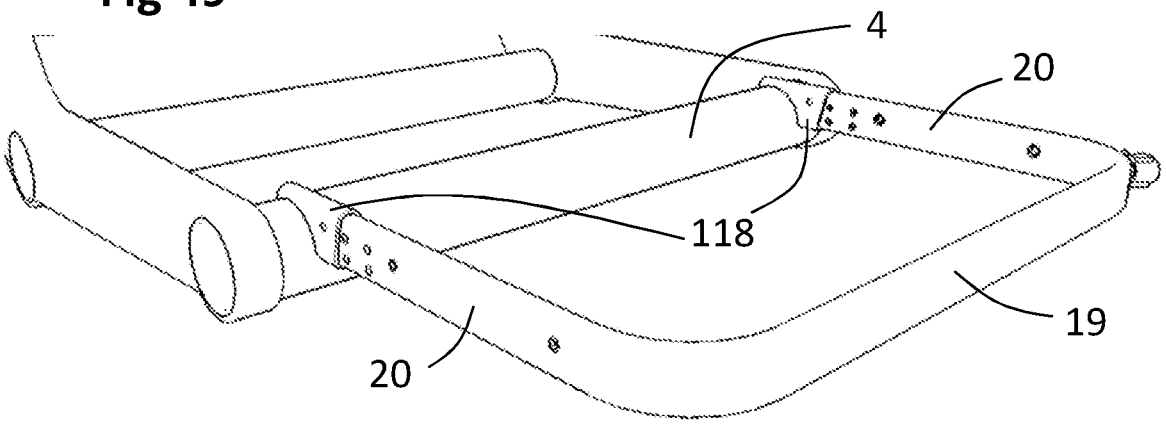

Fig 50

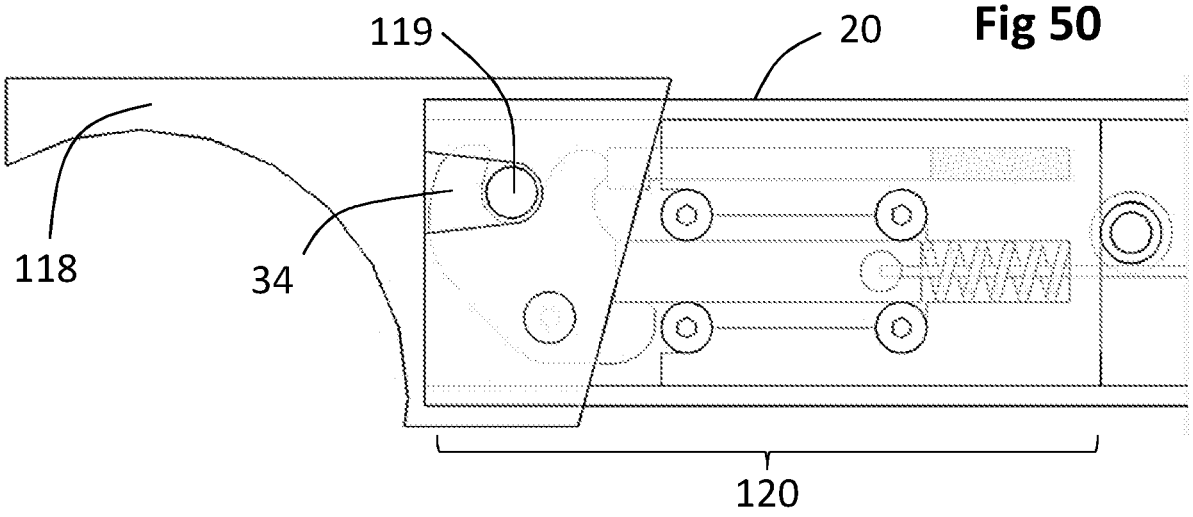

Fig 51

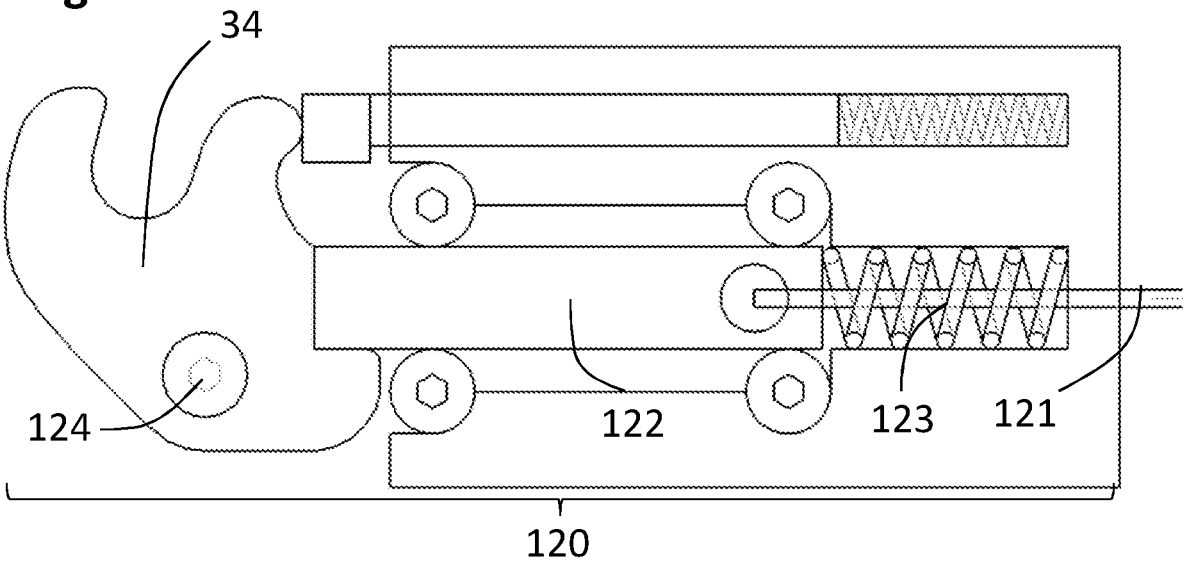

Fig 52

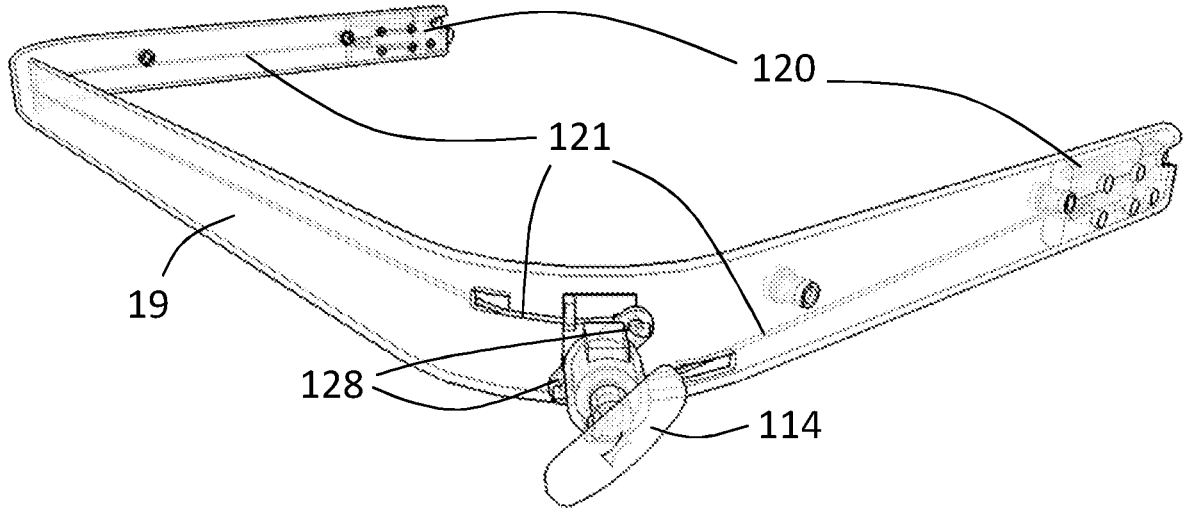

Fig 53

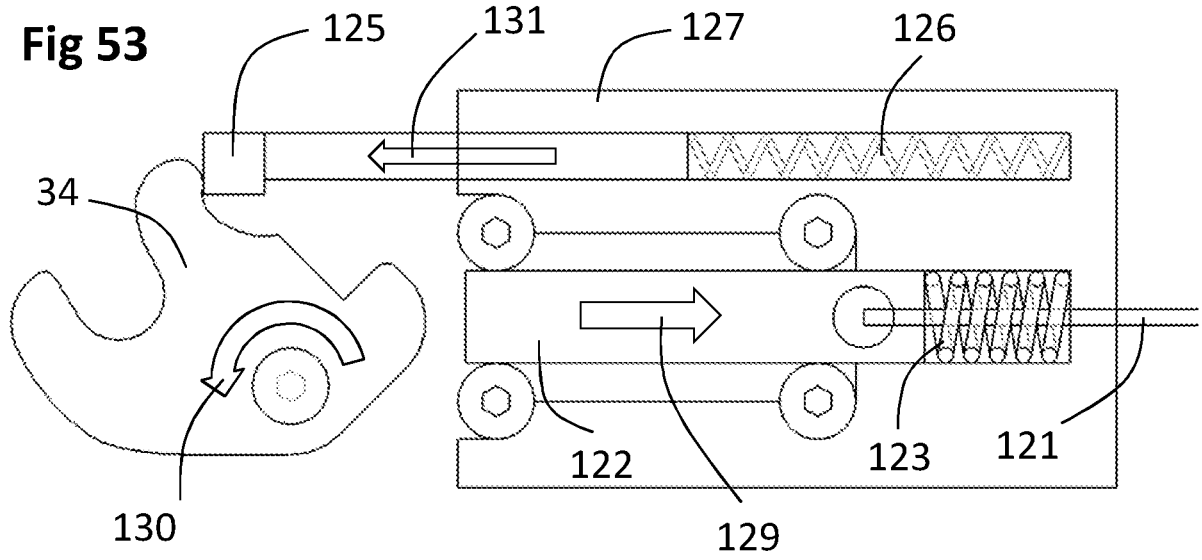

Fig 54

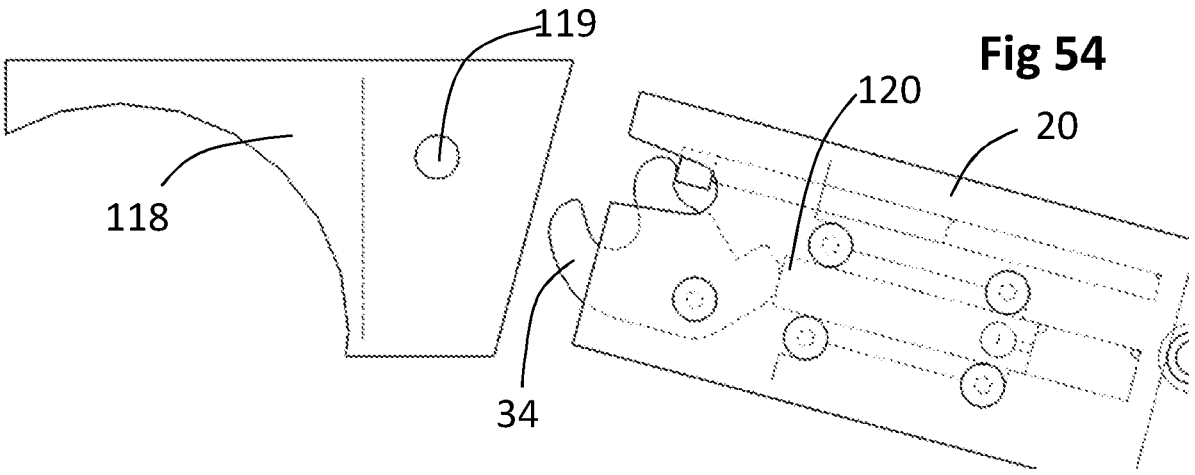

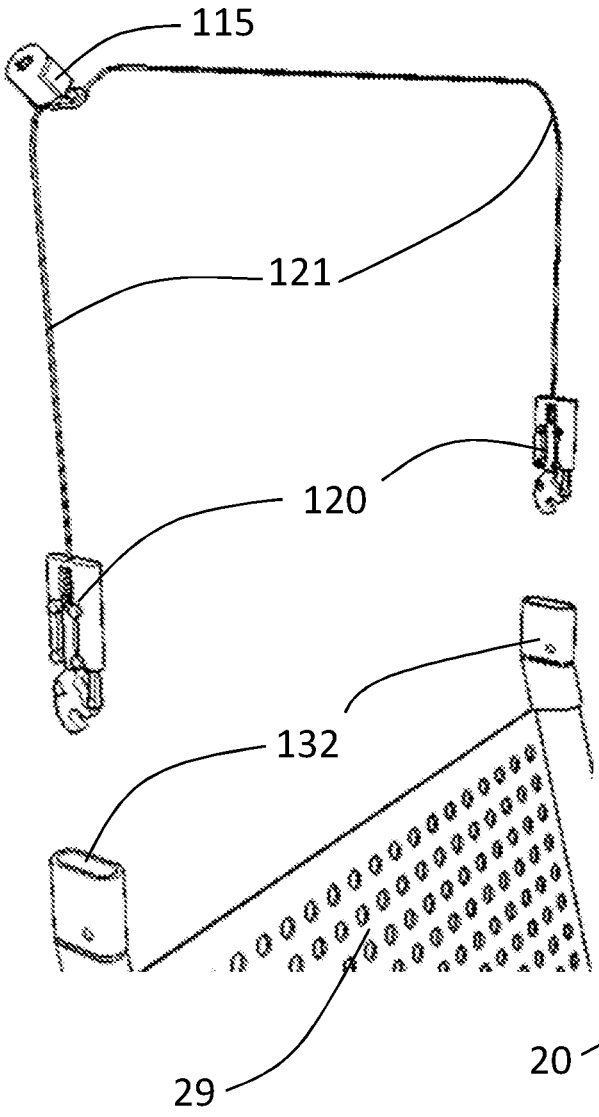

Fig 55

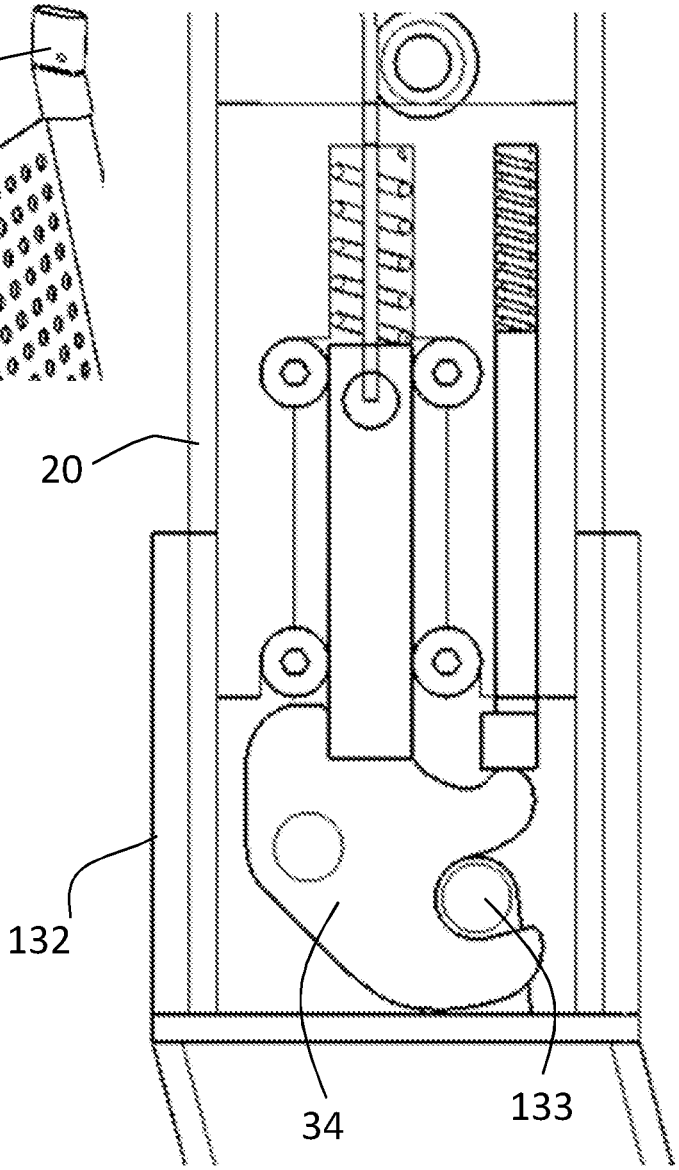

Fig 56

Fig 57

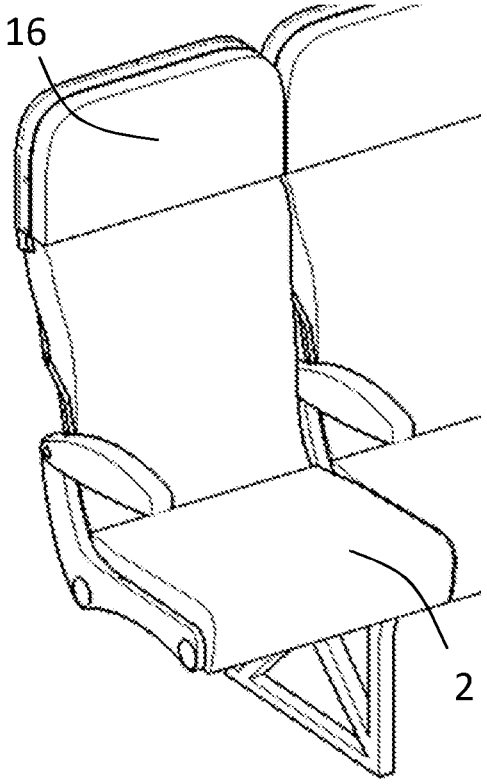

Fig 58

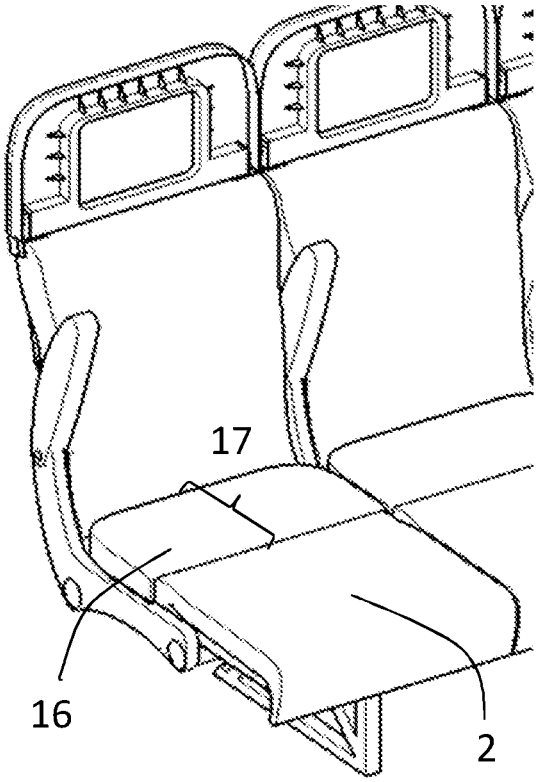

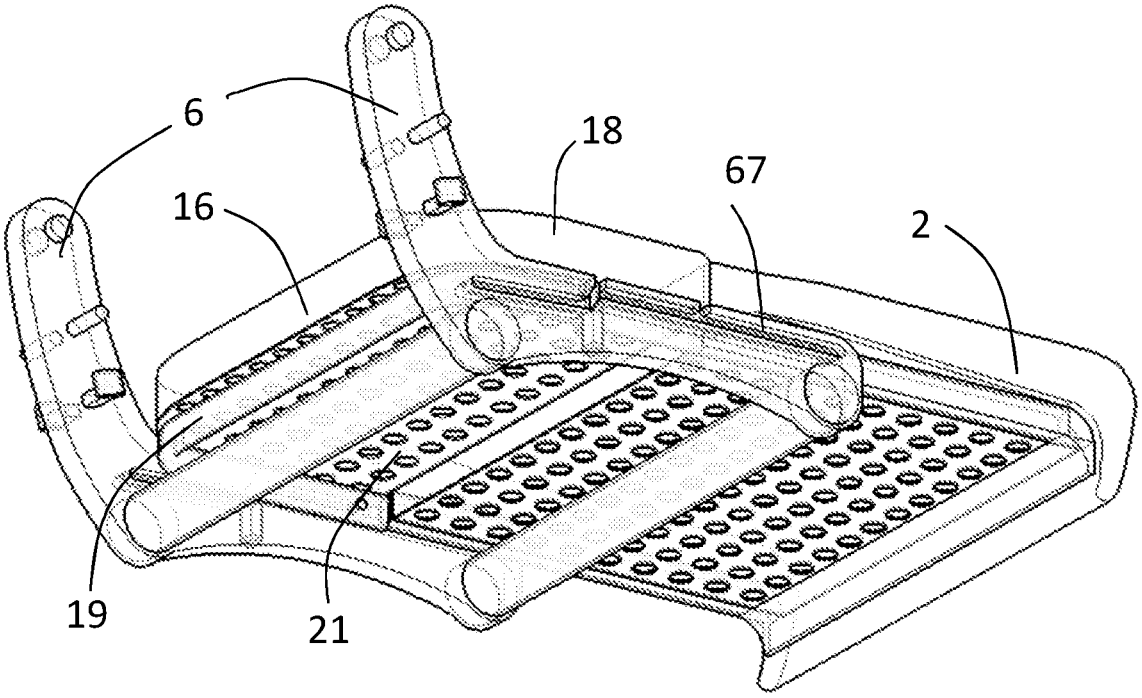

Fig 59

Fig 60a

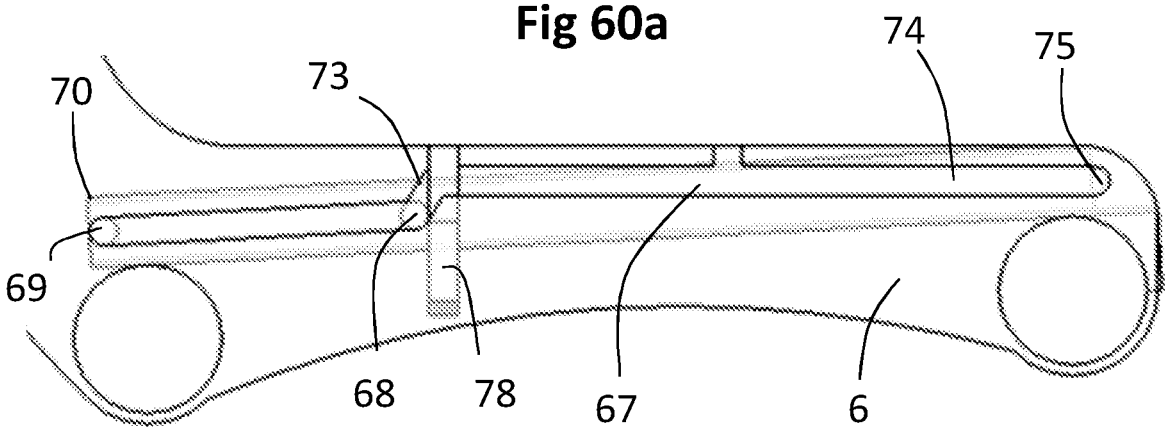

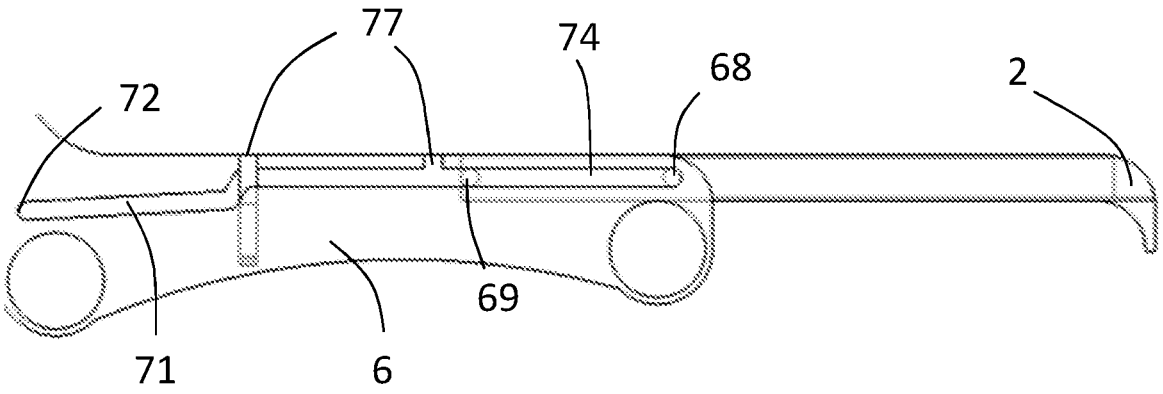

Fig 60b

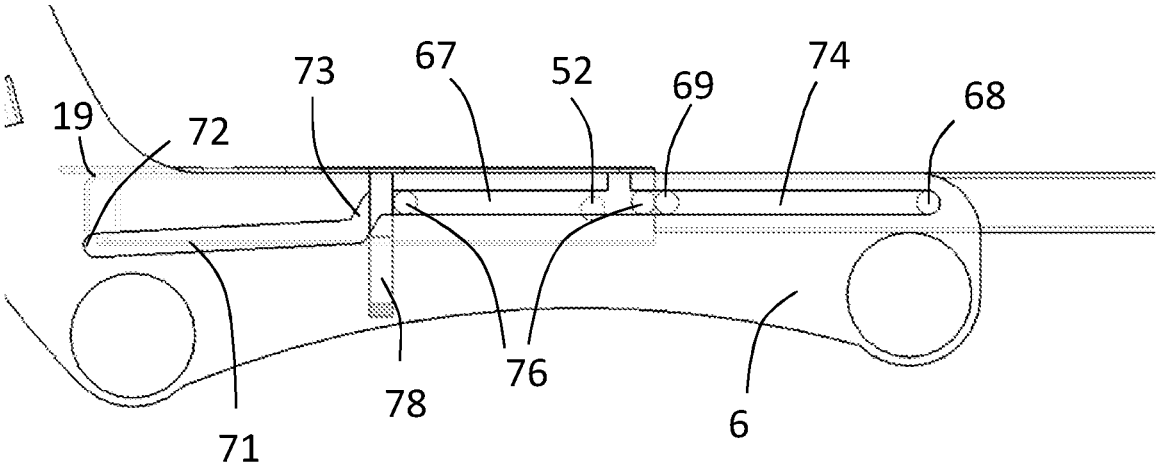

Fig 60c

Fig 61

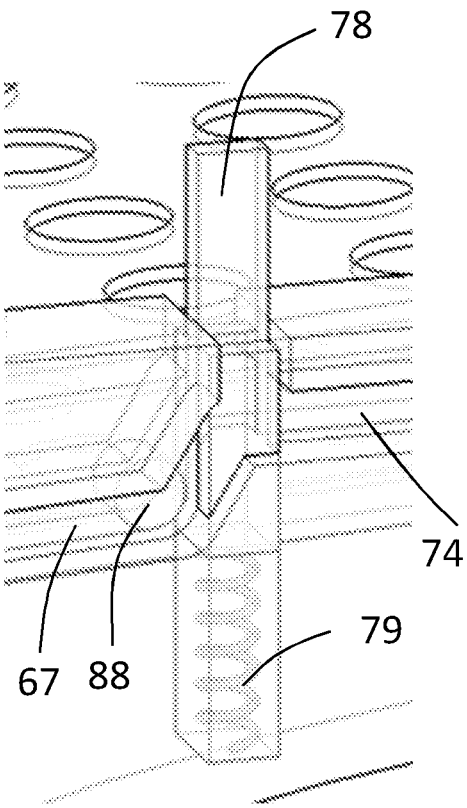

Fig 62

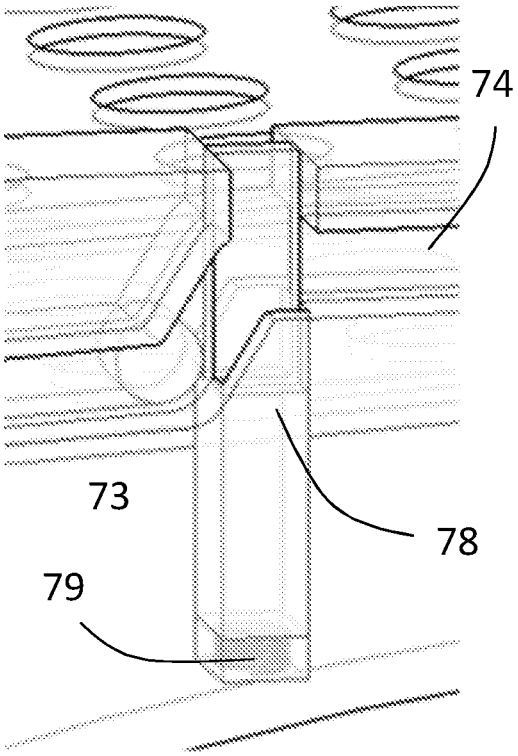

Fig 63

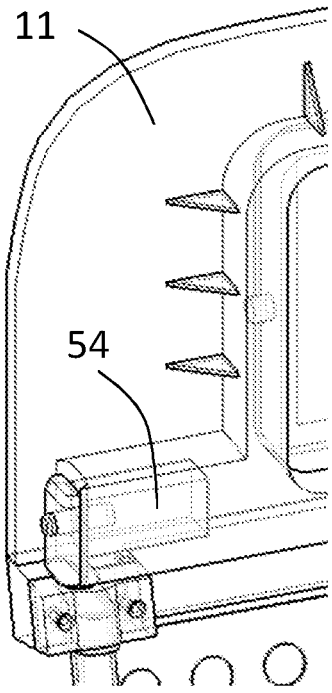

Fig 64

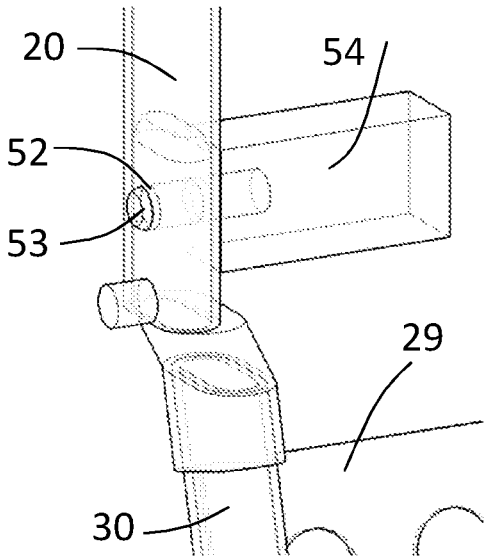

Fig 65

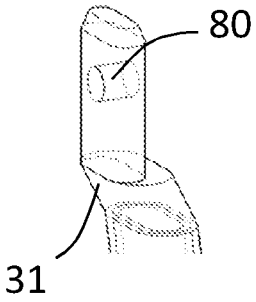

Fig 66

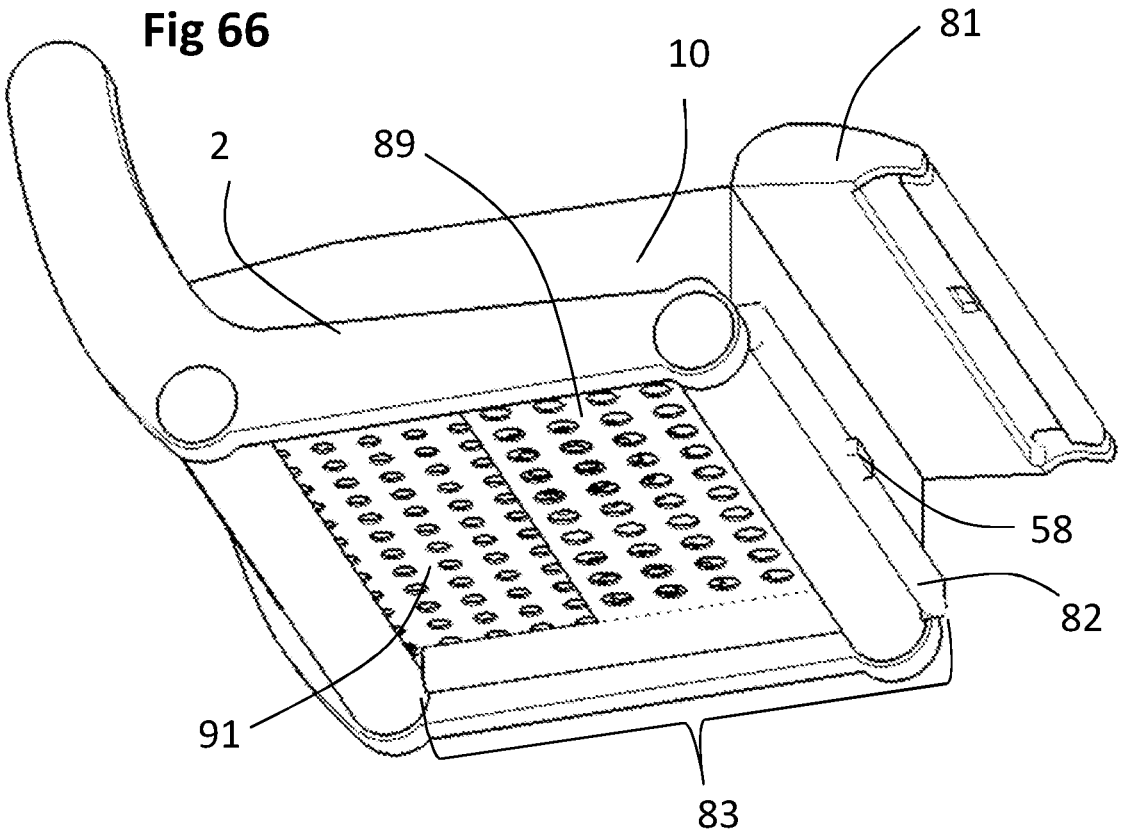

Fig 67

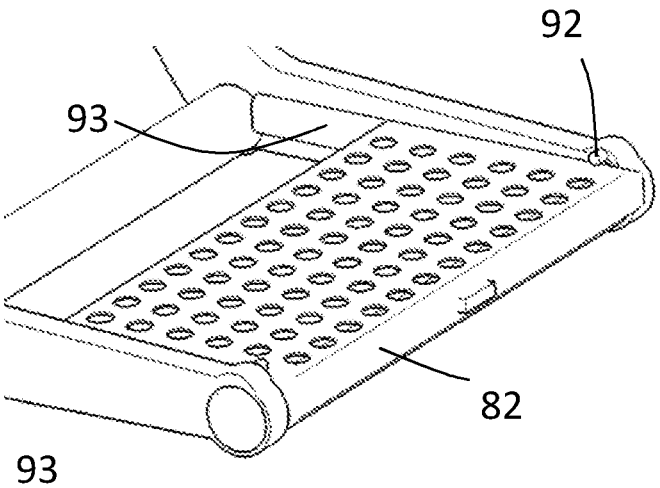

Fig 68

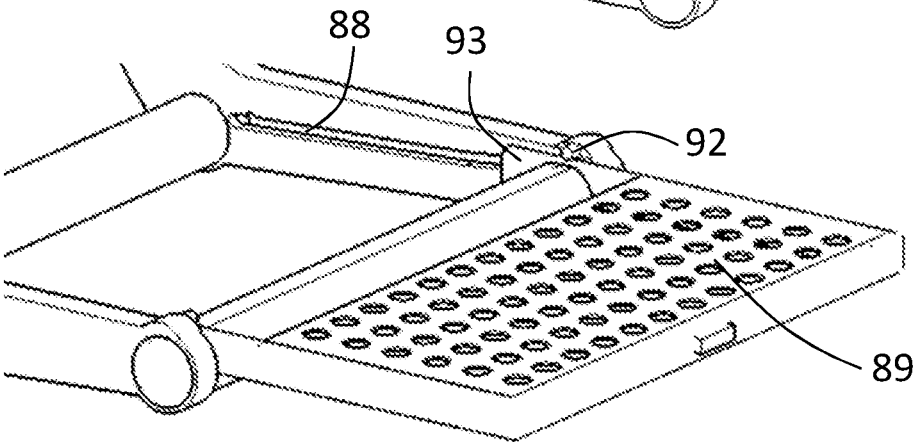

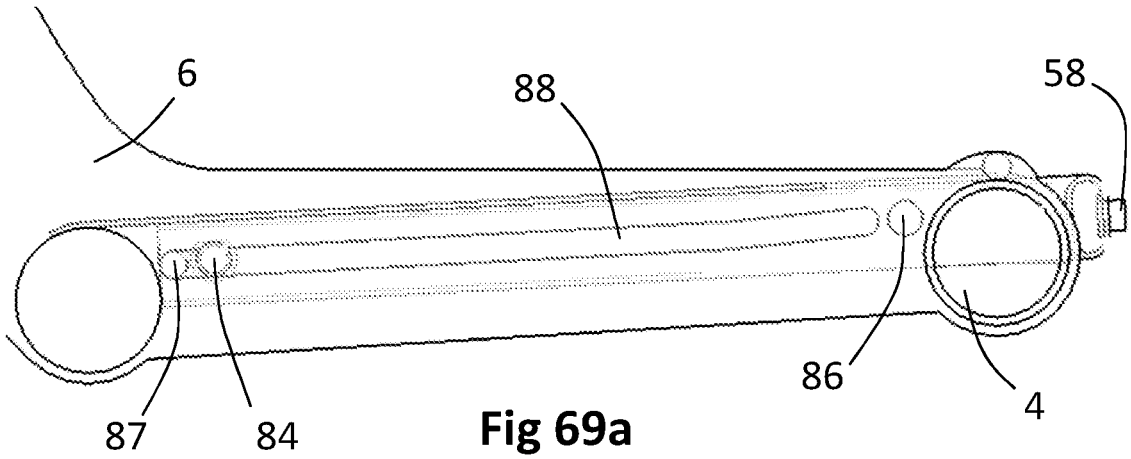

Fig 69a

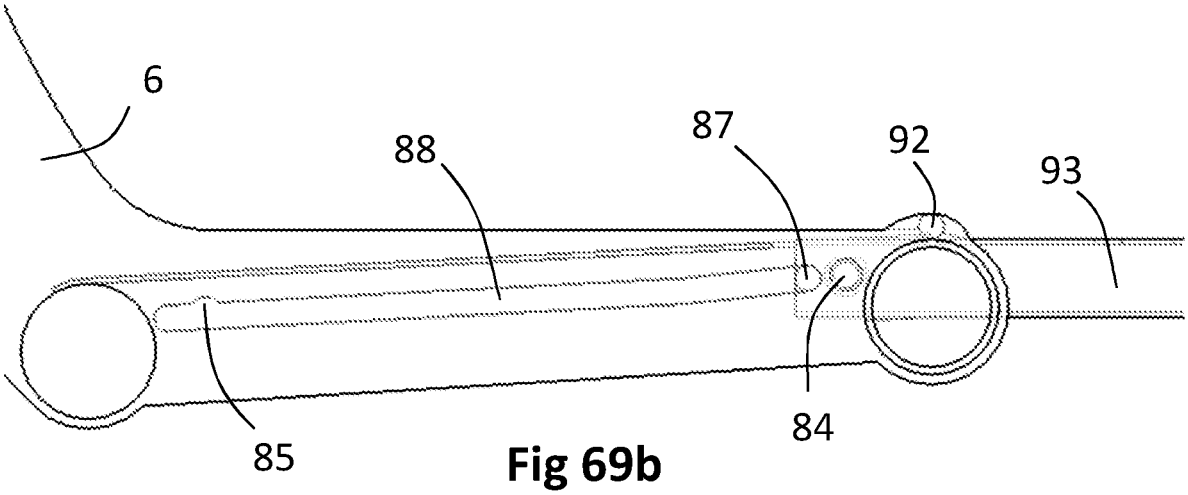

Fig 69b

Fig 69c

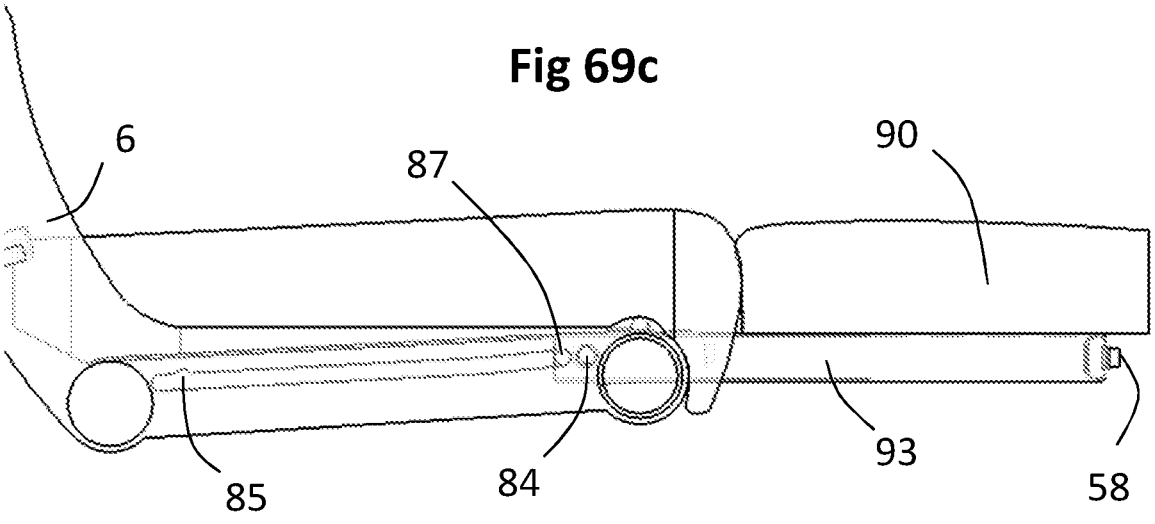

Fig 70

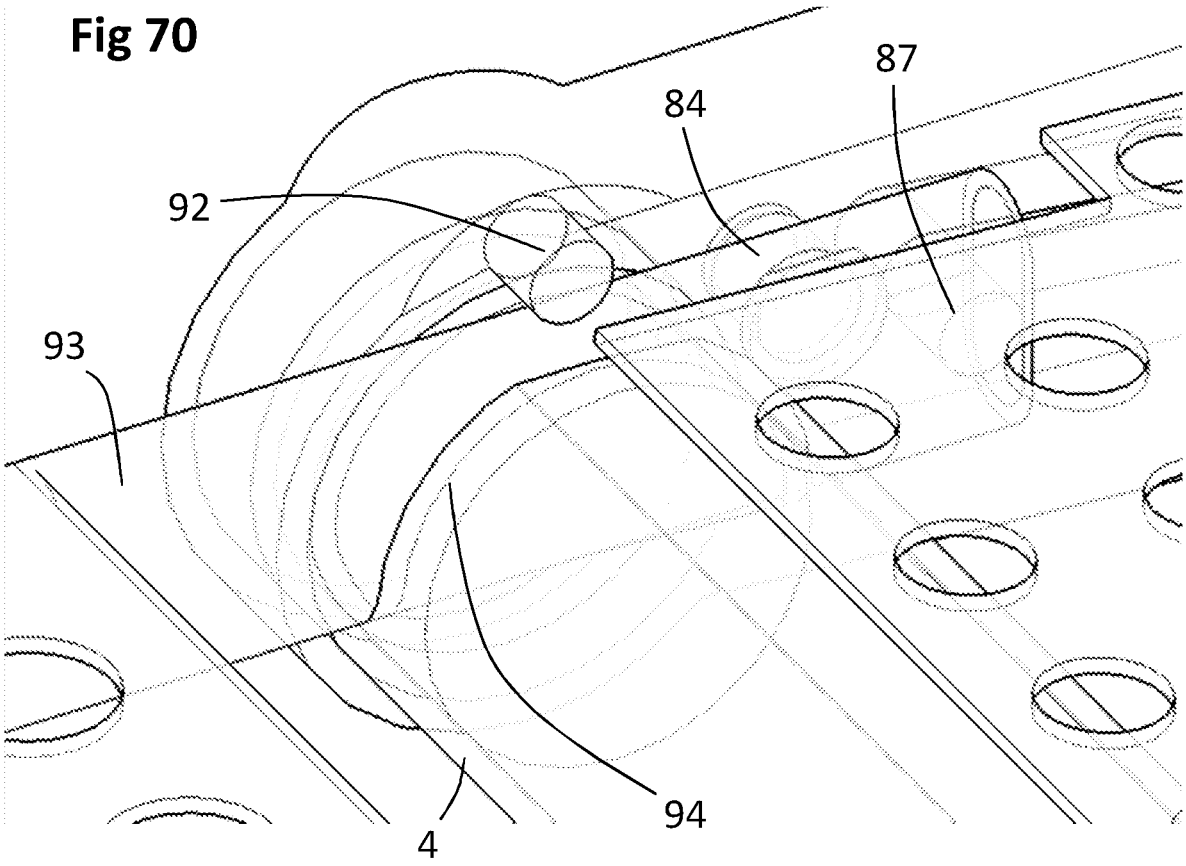

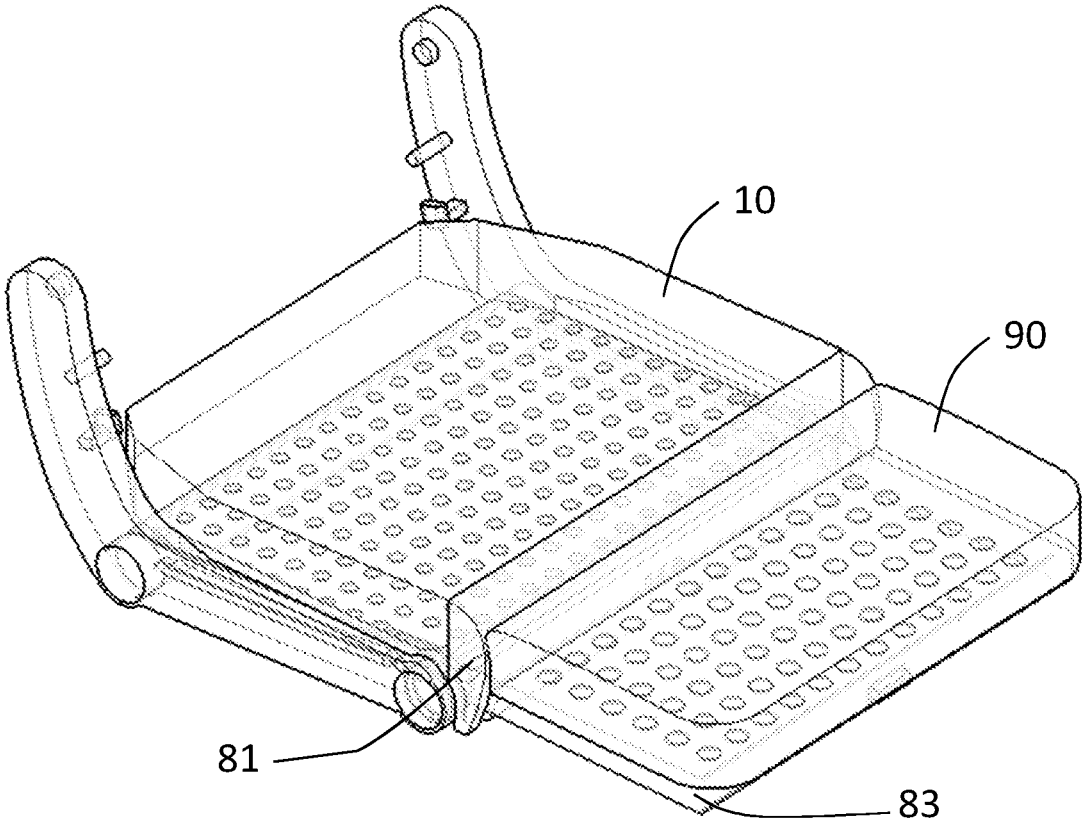

Fig 71

Fig 72

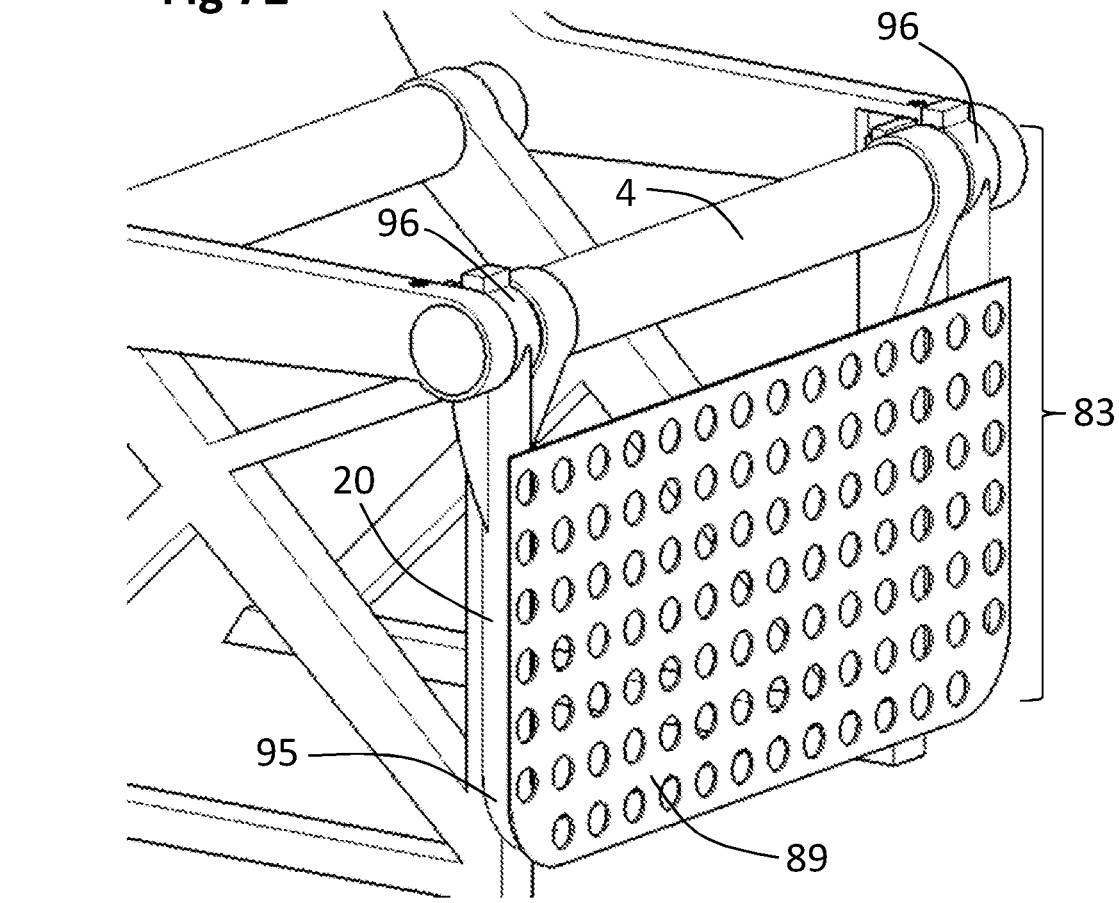

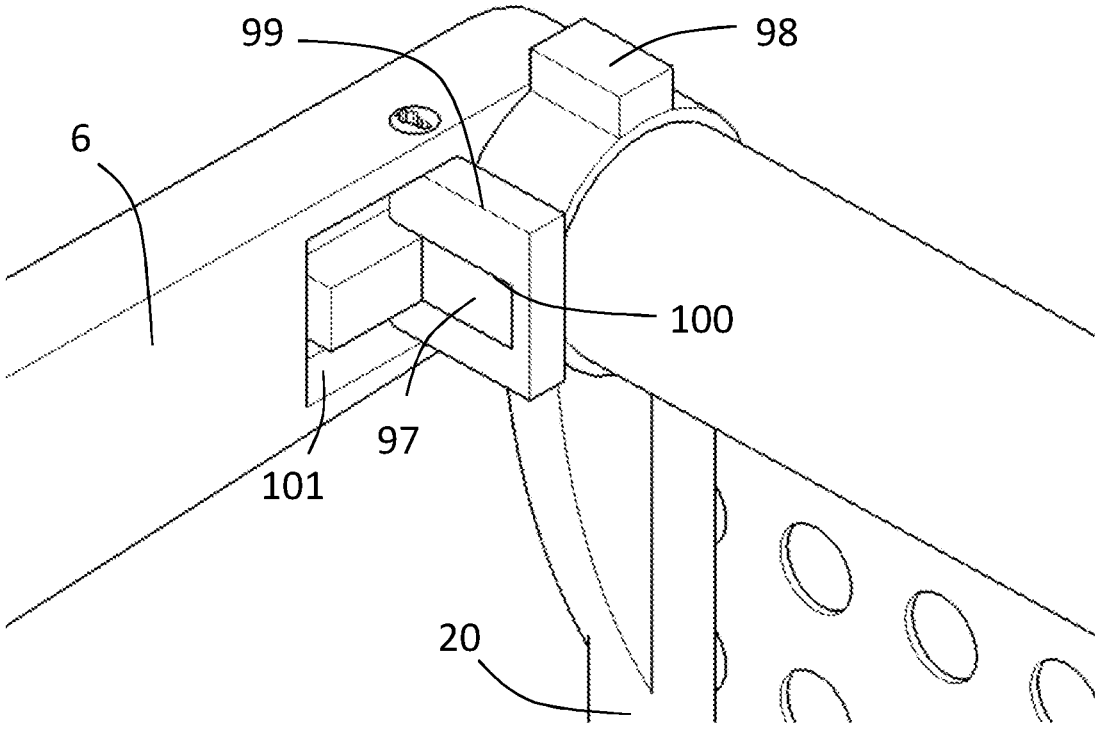

Fig 73

Fig 74

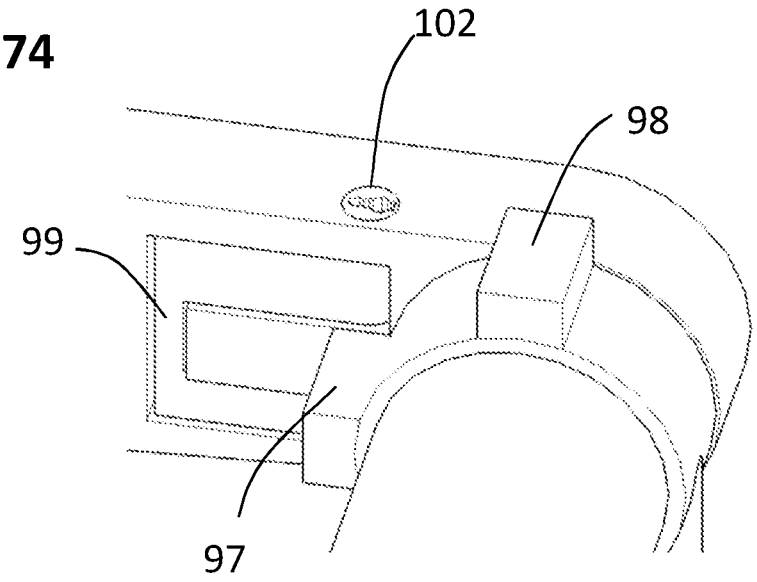

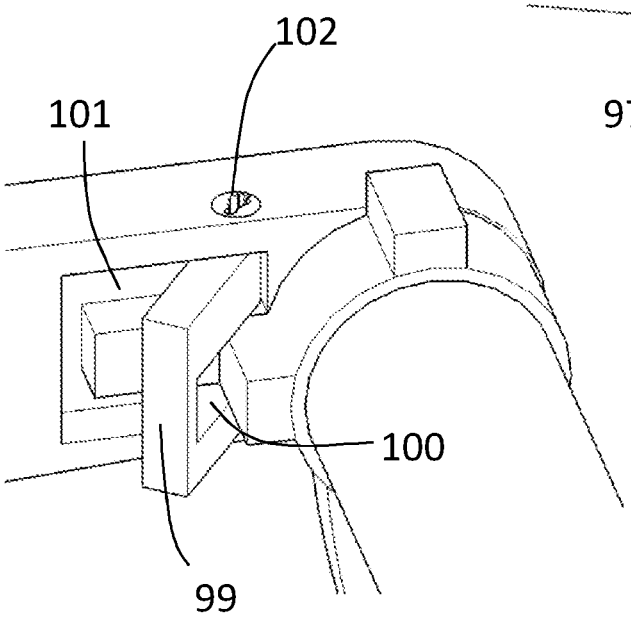

Fig 75

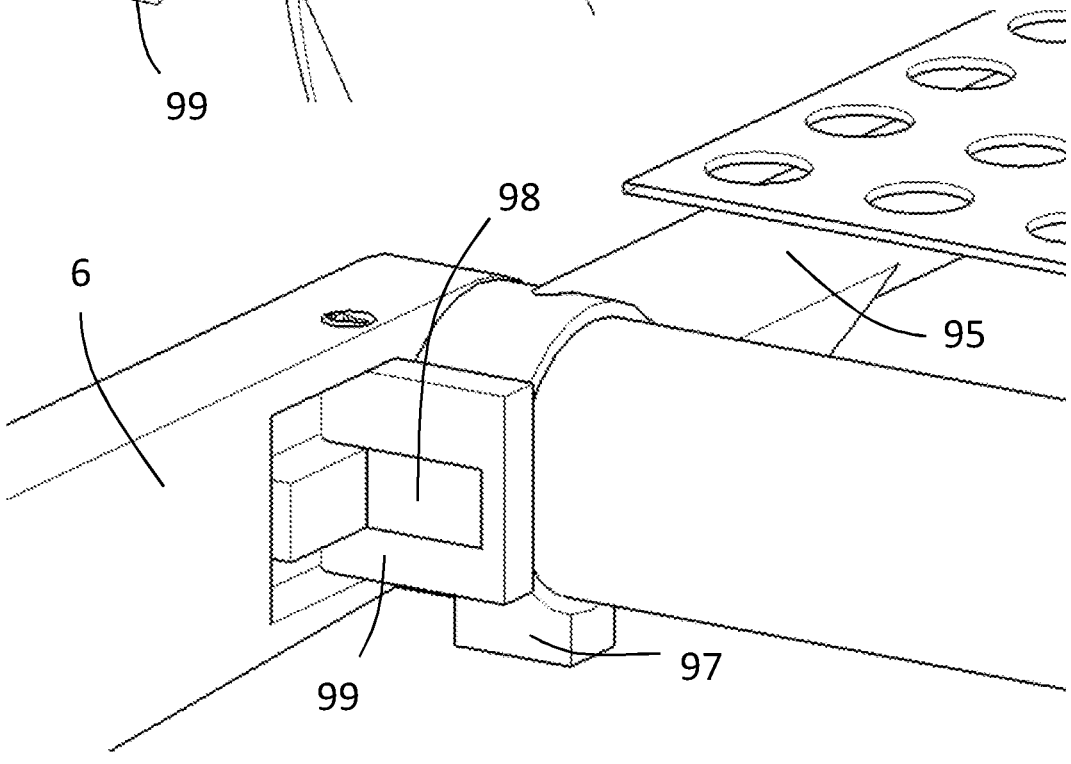

Fig 76

Fig 77

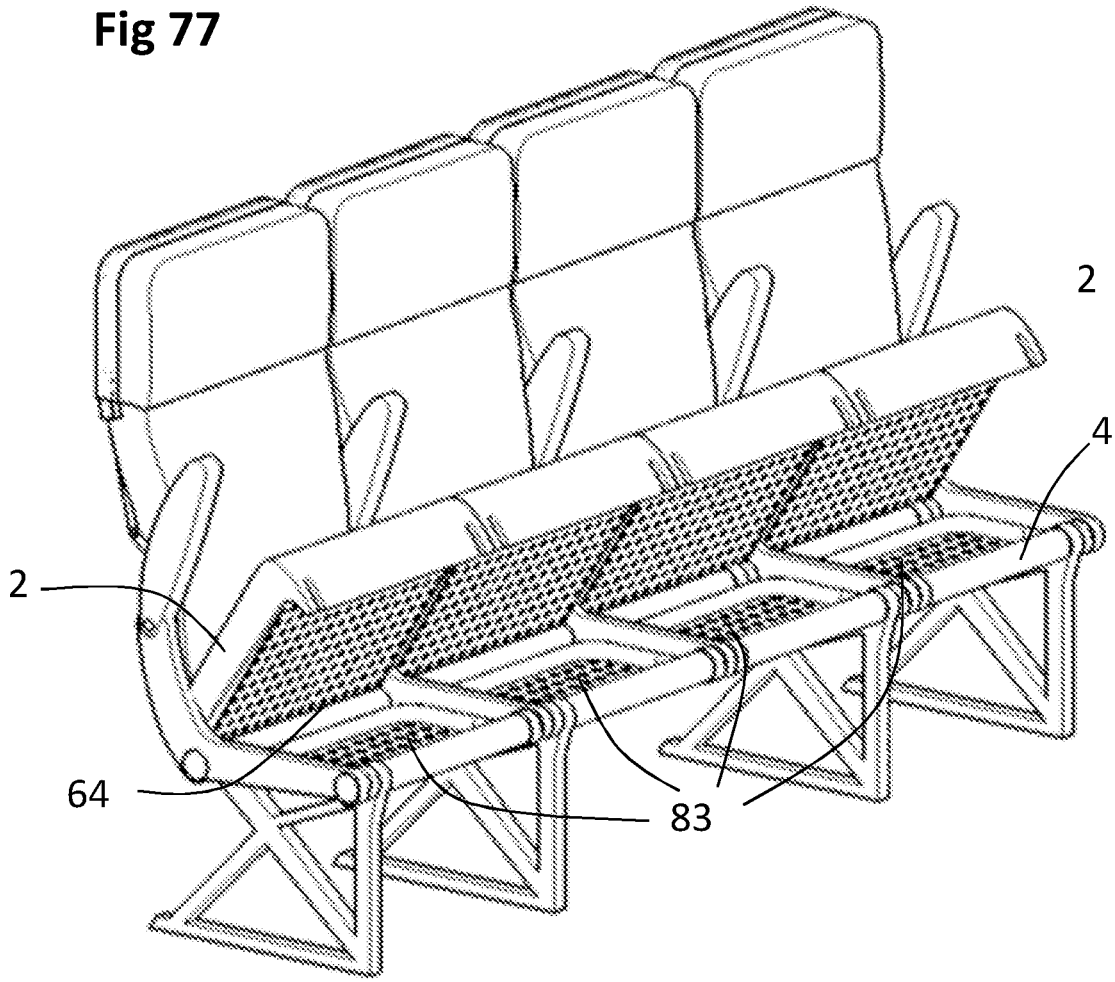

Fig 78

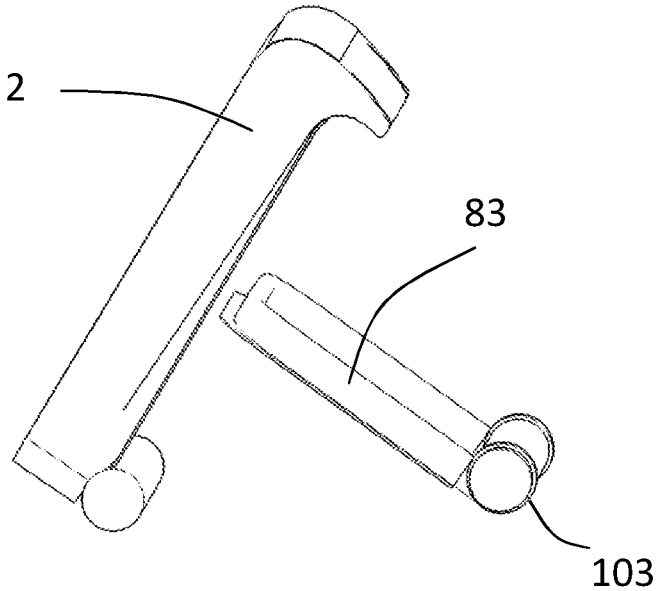

Fig 79

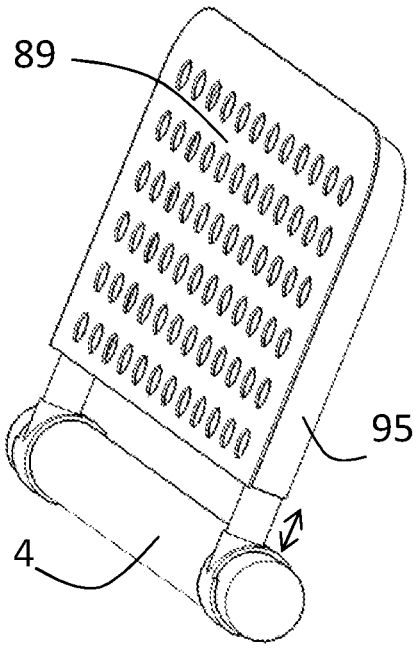

Fig 80

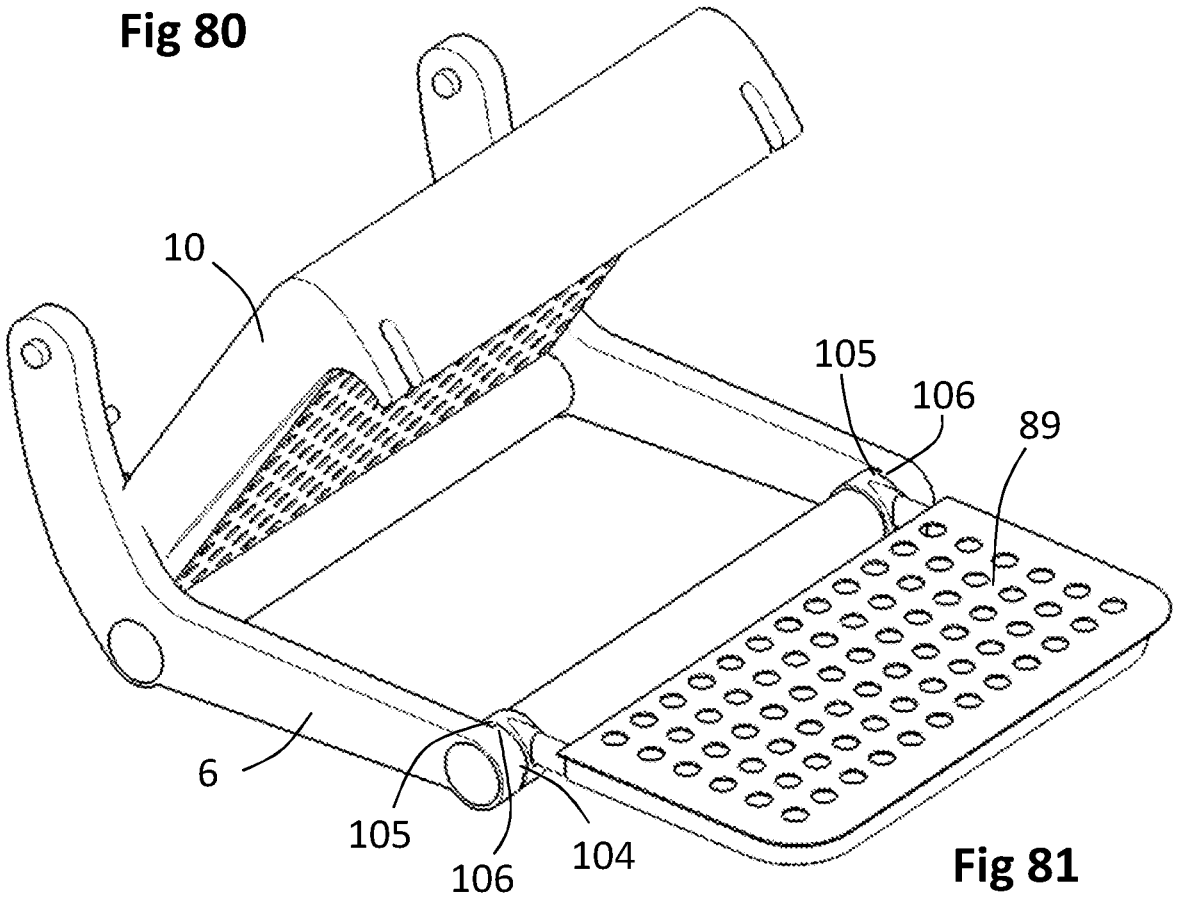

Fig 81

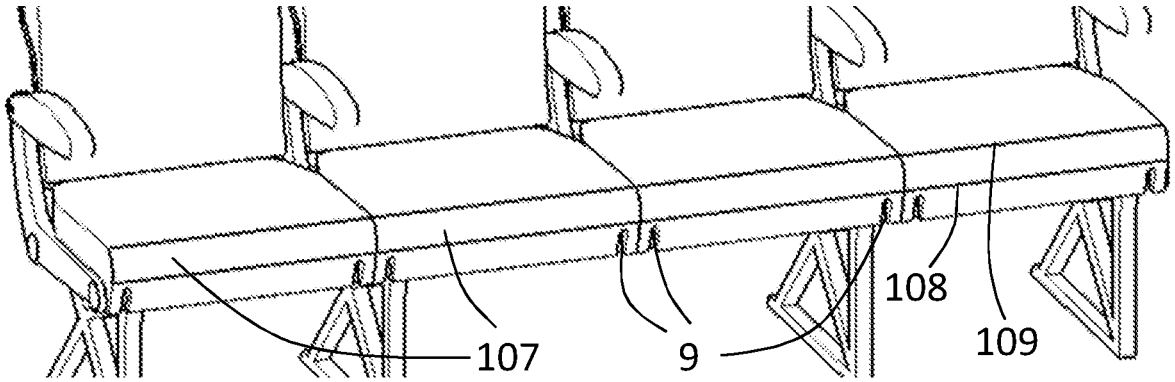

Fig 82

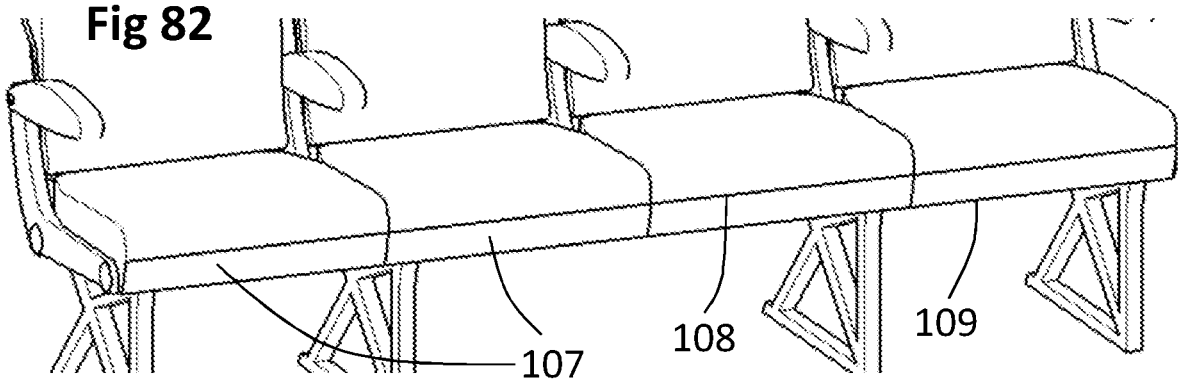

Fig 83

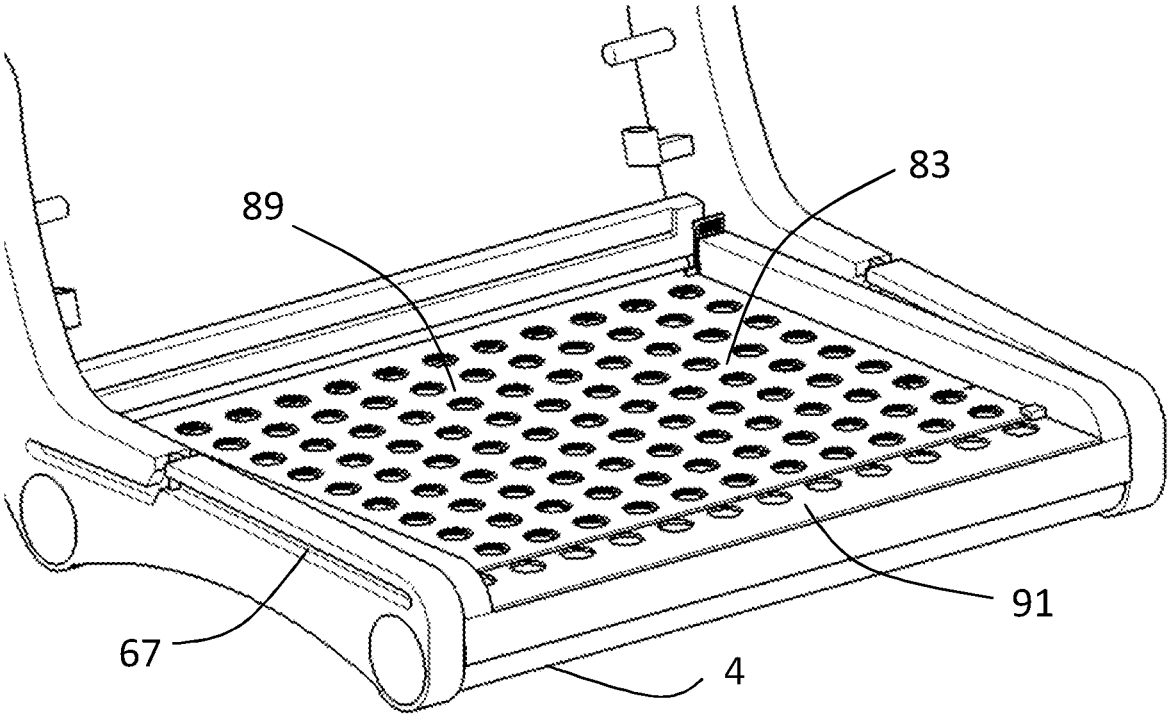

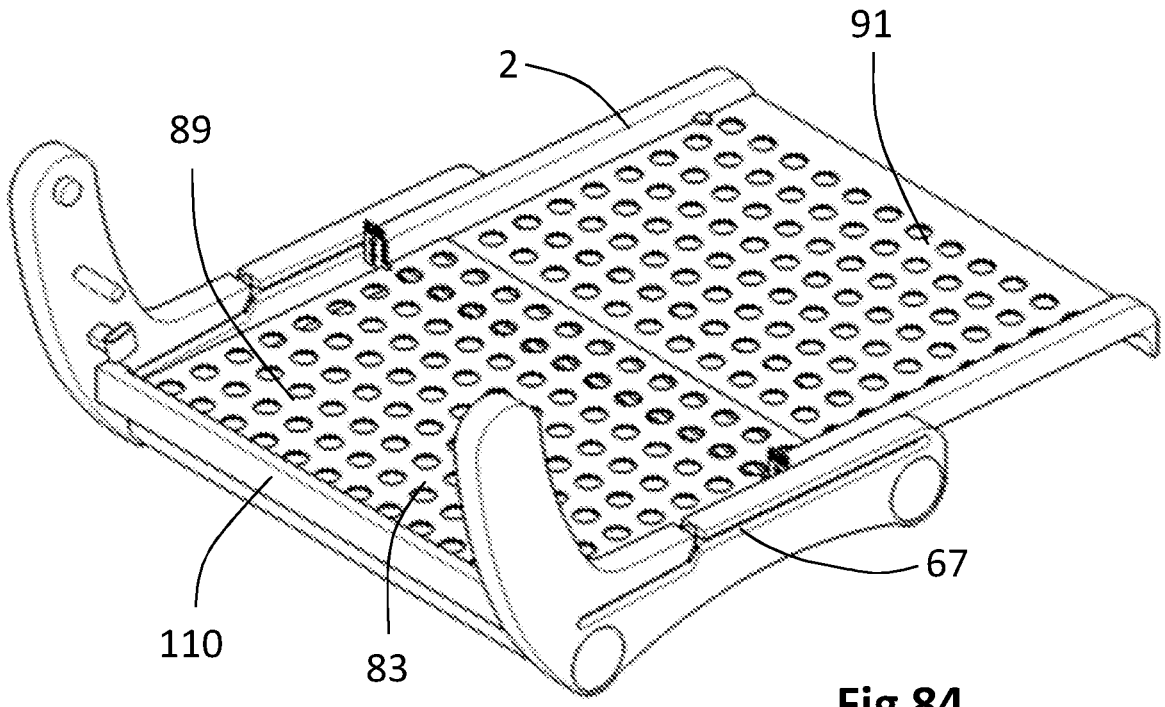

Fig 84

Fig 85

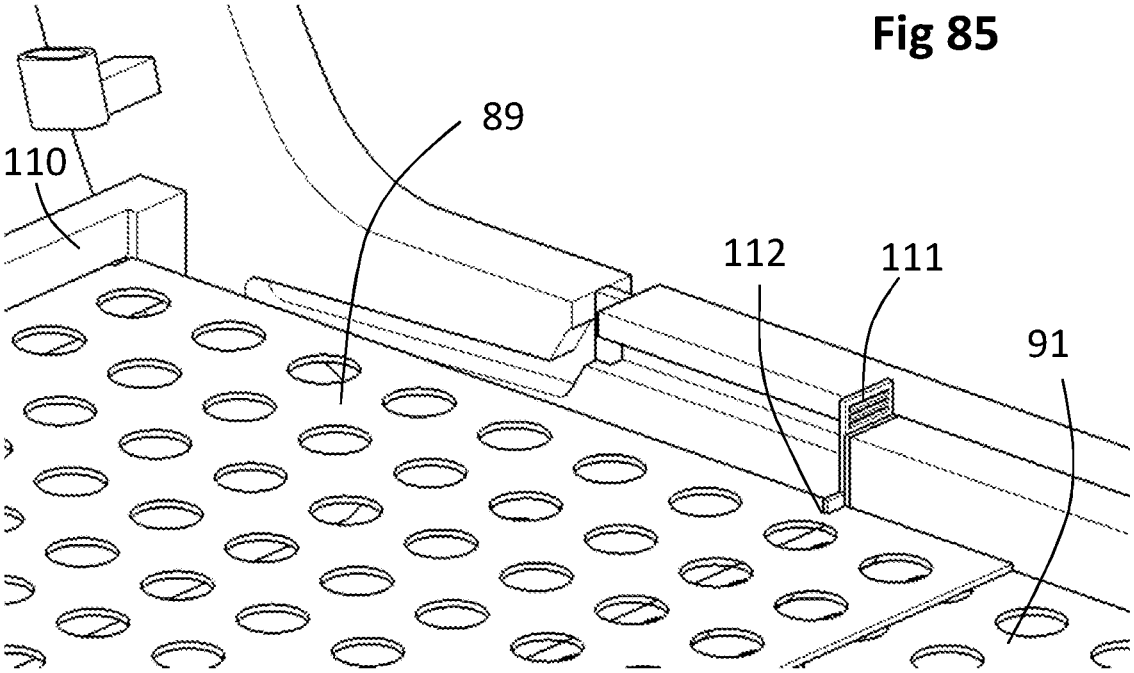

Fig 86

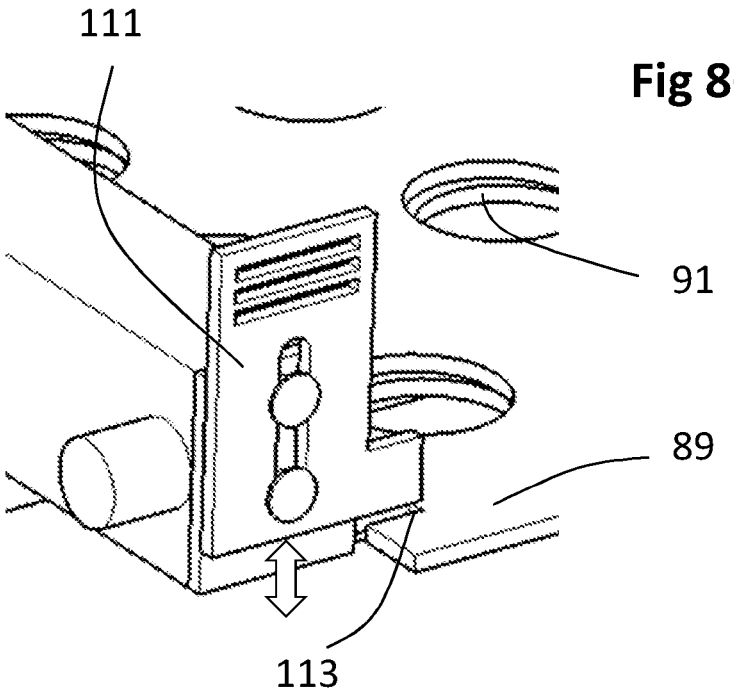

Fig 87a

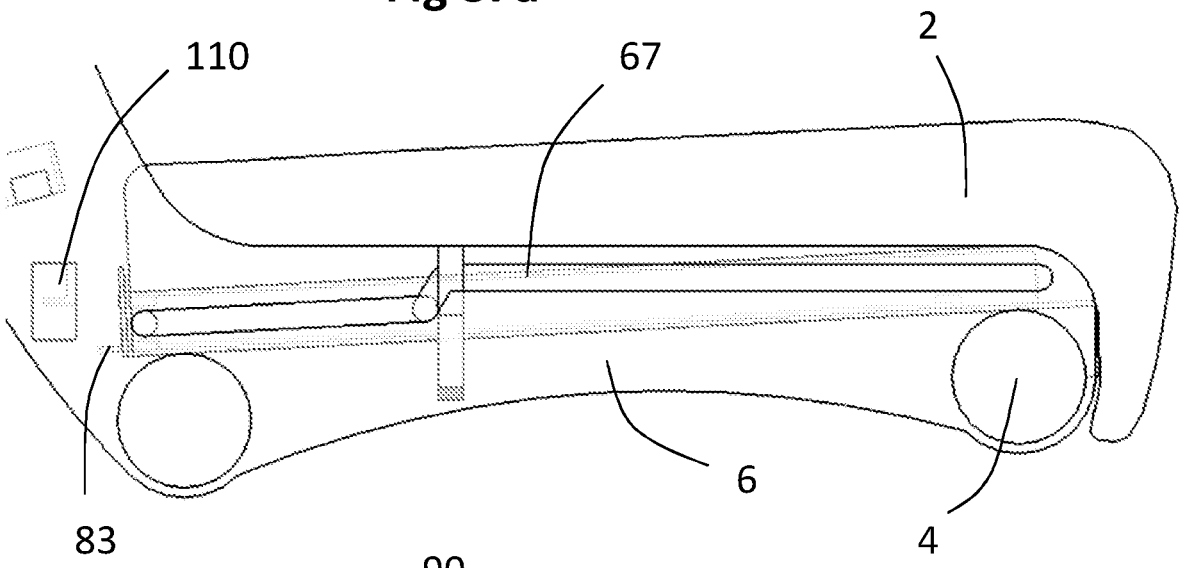

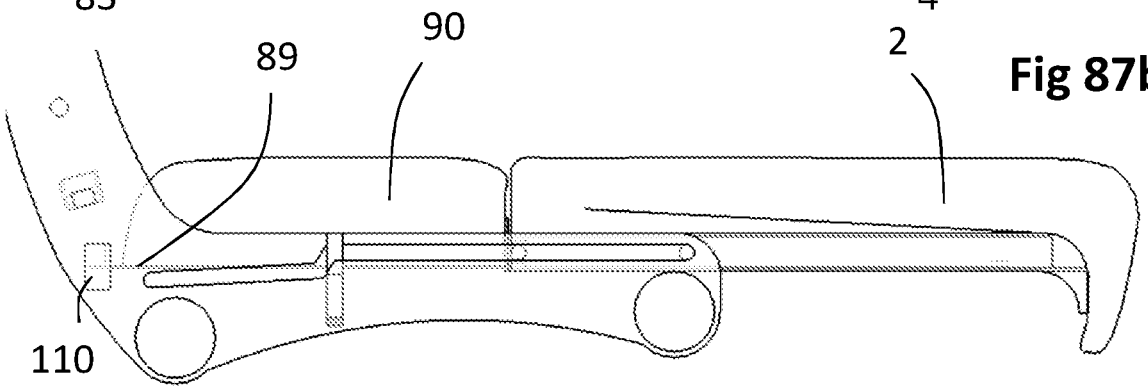

Fig 87b

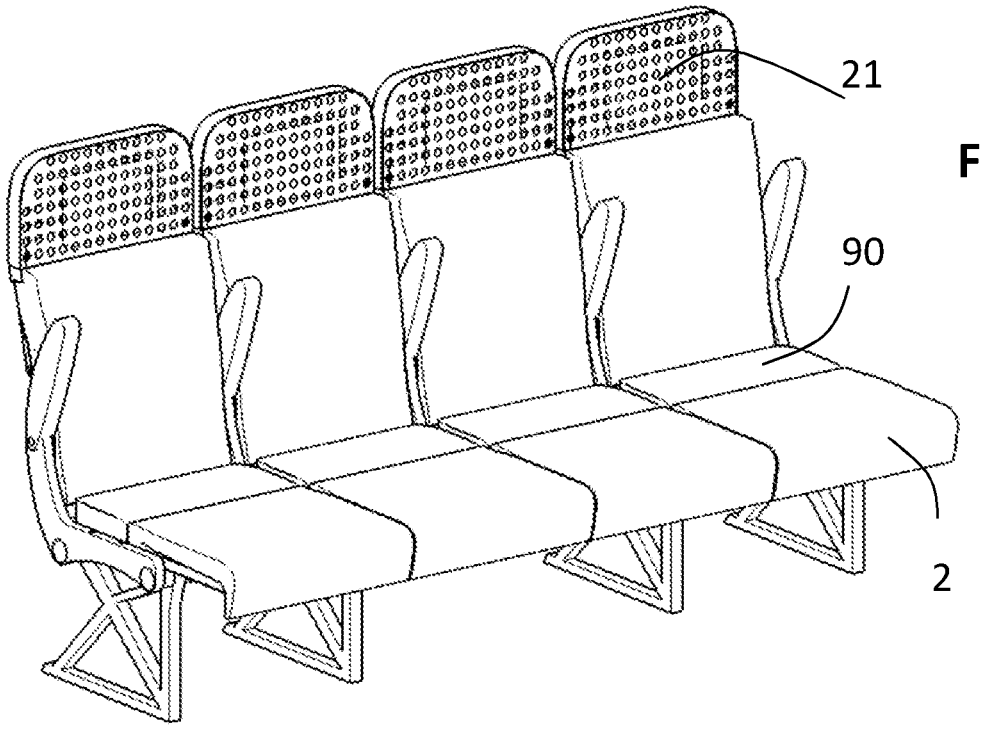

Fig 88