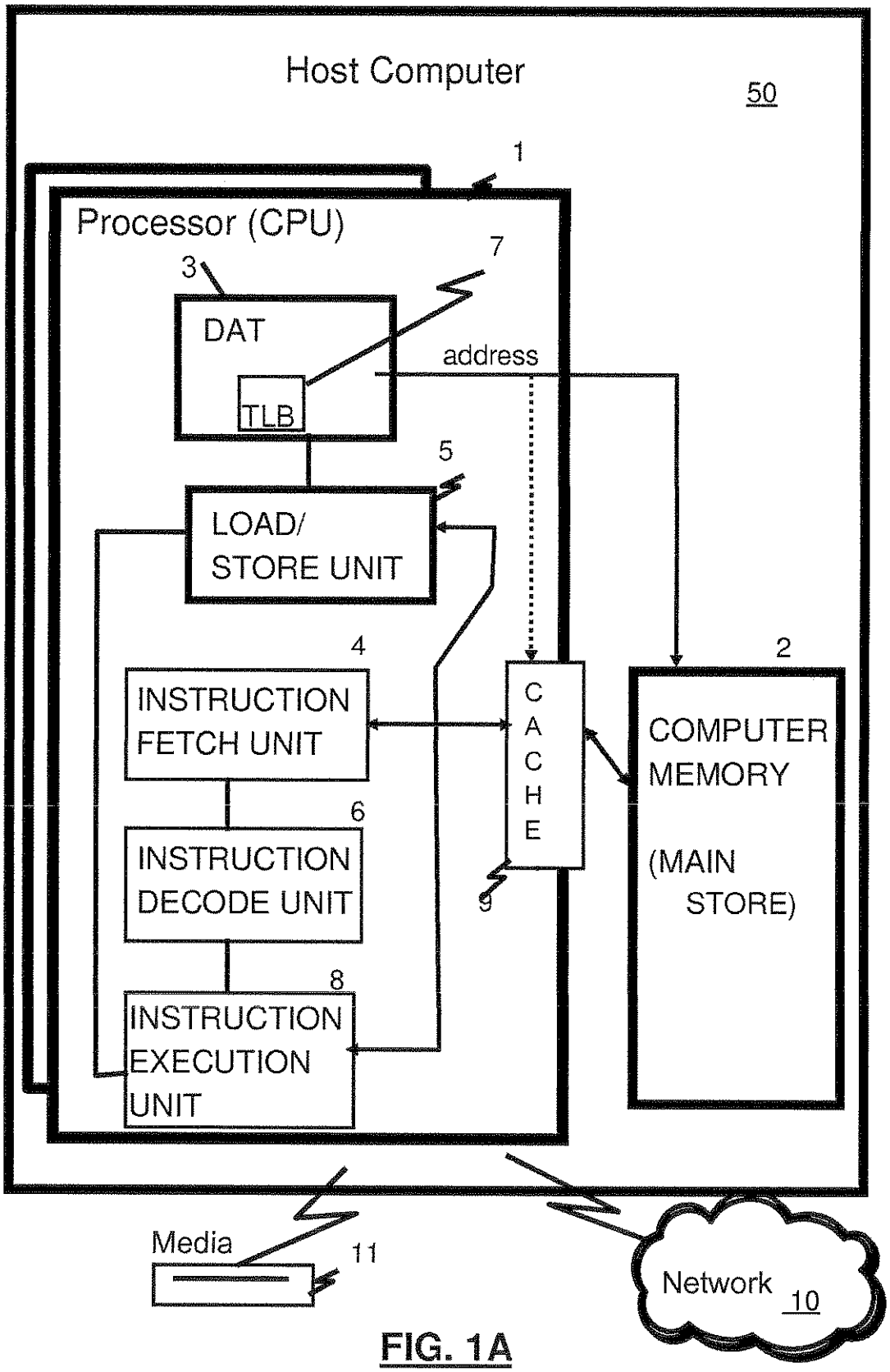
Host Computer
50
1
Processor (CPU)
7
3
DAT
address
TLB
5
LOAD/
STORE UNIT
4
2
INSTRUCTION
FETCH UNIT
C
A
C
H
E
COMPUTER
MEMORY
(MAIN
STORE)
6
INSTRUCTION
DECODE UNIT
9
8
INSTRUCTION
EXECUTION
UNIT
Media
11
Network
10

FIG. 1A

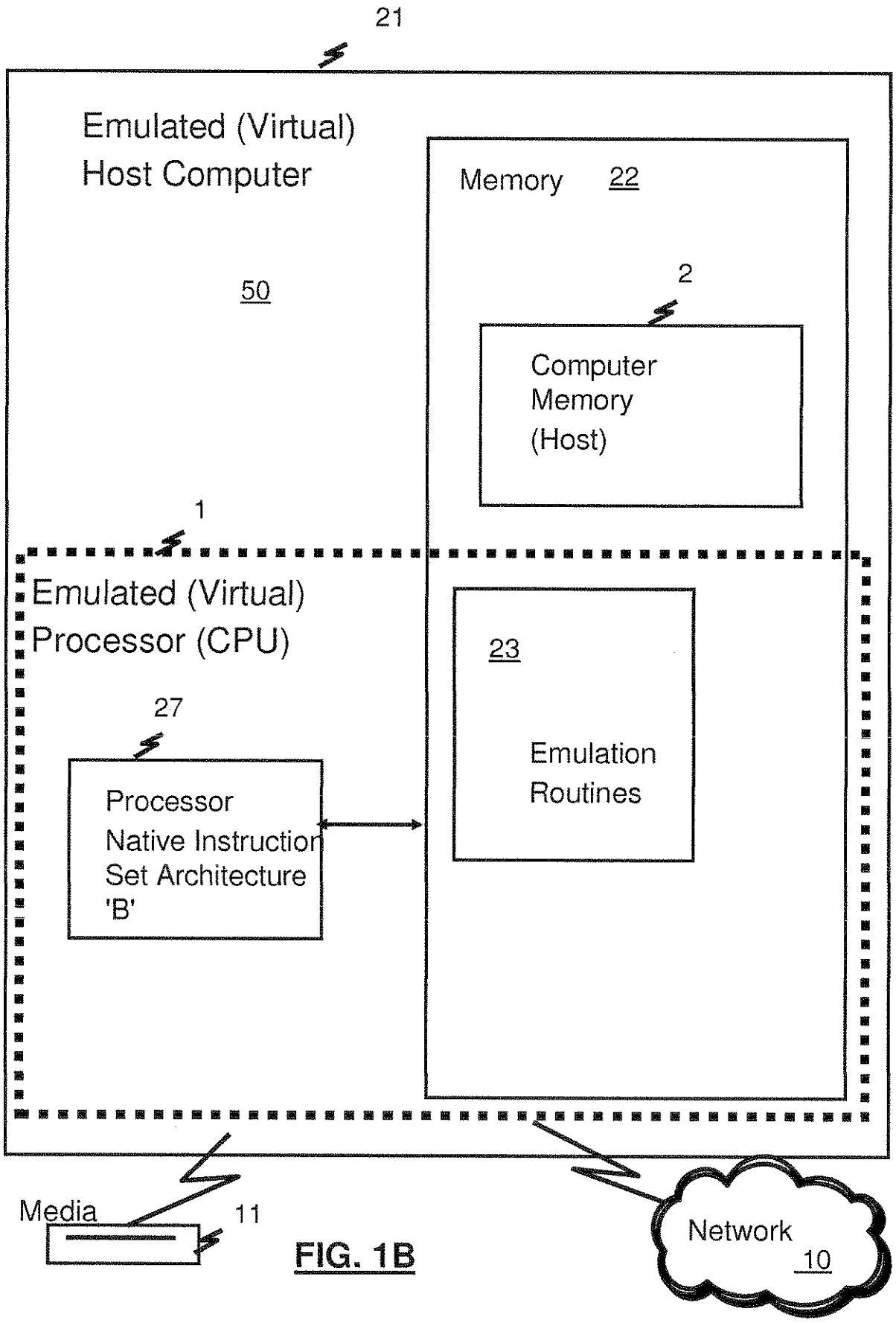
21
Emulated (Virtual)
Host Computer
Memory 22
50
2
Computer
Memory
(Host)
1
Emulated (Virtual)
Processor (CPU)
23
Emulation
Routines
27
Processor
Native Instruction
Set Architecture
'B'
Media
11
Network
10

FIG. 1B

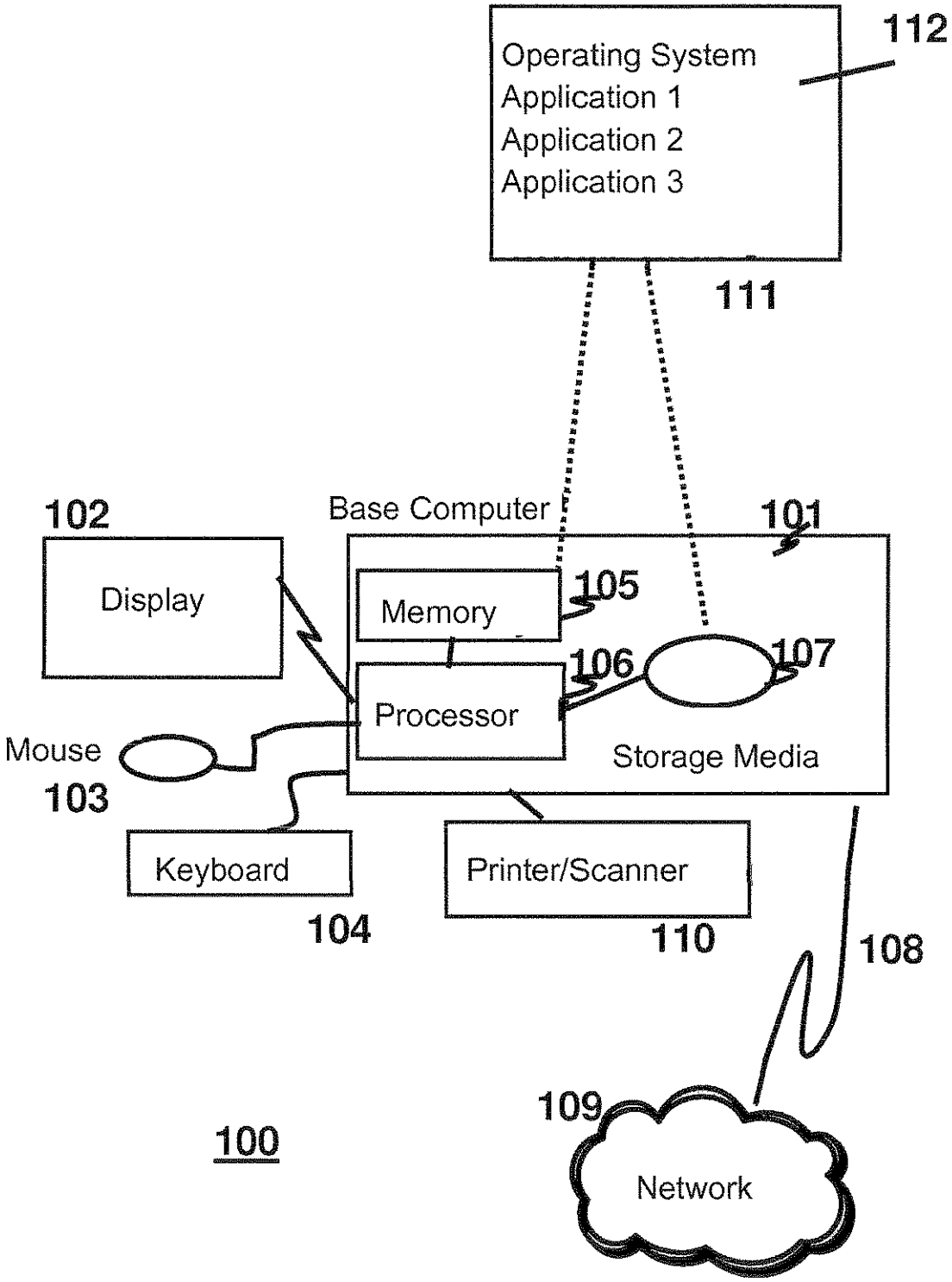
Operating System
Application 1
Application 2
Application 3
112
111
102
Base Computer
101
Display
Memory
105
106
107
Processor
Storage Media
Mouse
103
Keyboard
104
Printer/Scanner
110
108
109
Network
100

FIG. 1C

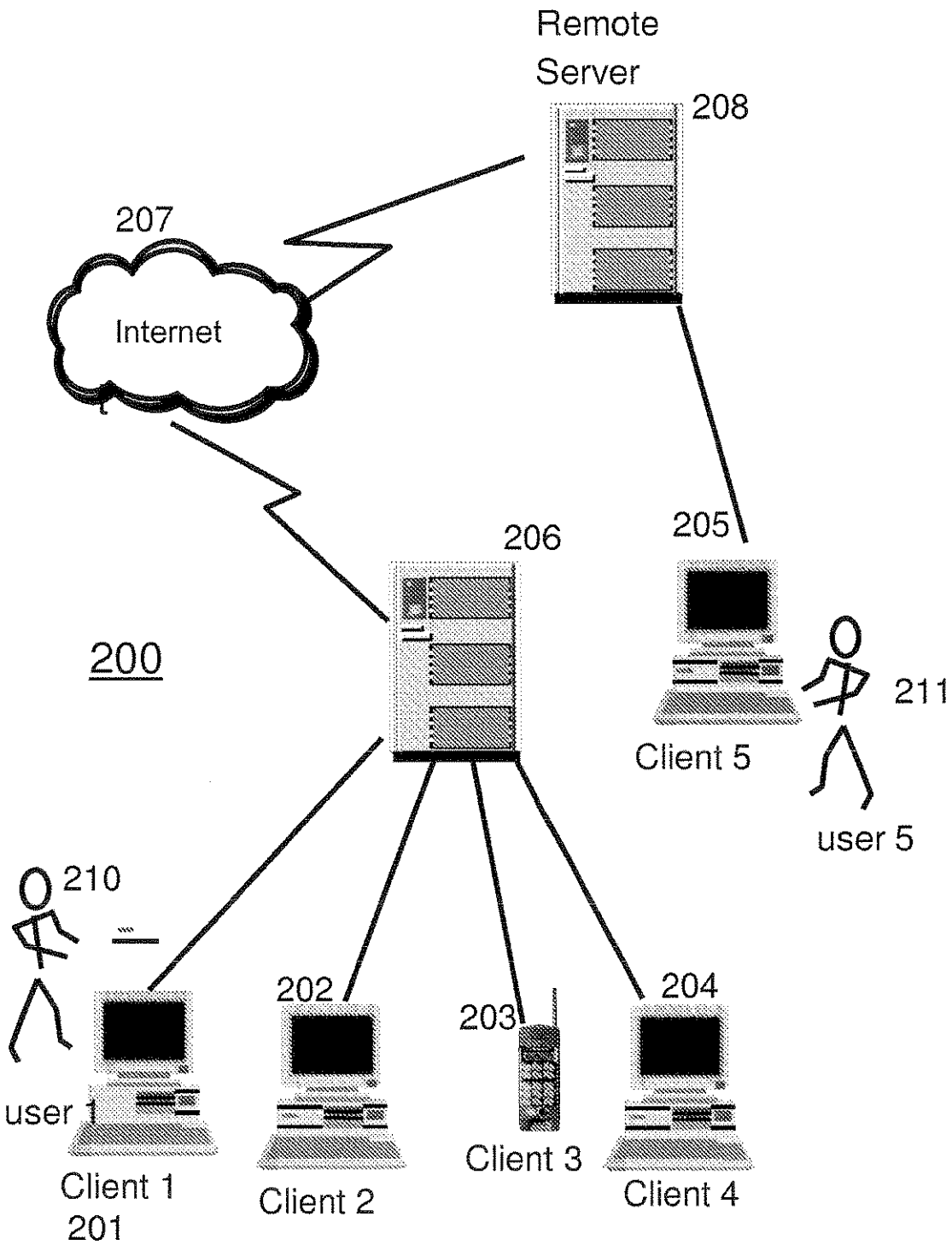
Remote
Server
208
207
Internet
206
205
200
211
Client 5
user 5
210
202
203
204
user 1
Client 1
201
Client 2
Client 3
Client 4

FIG. 2

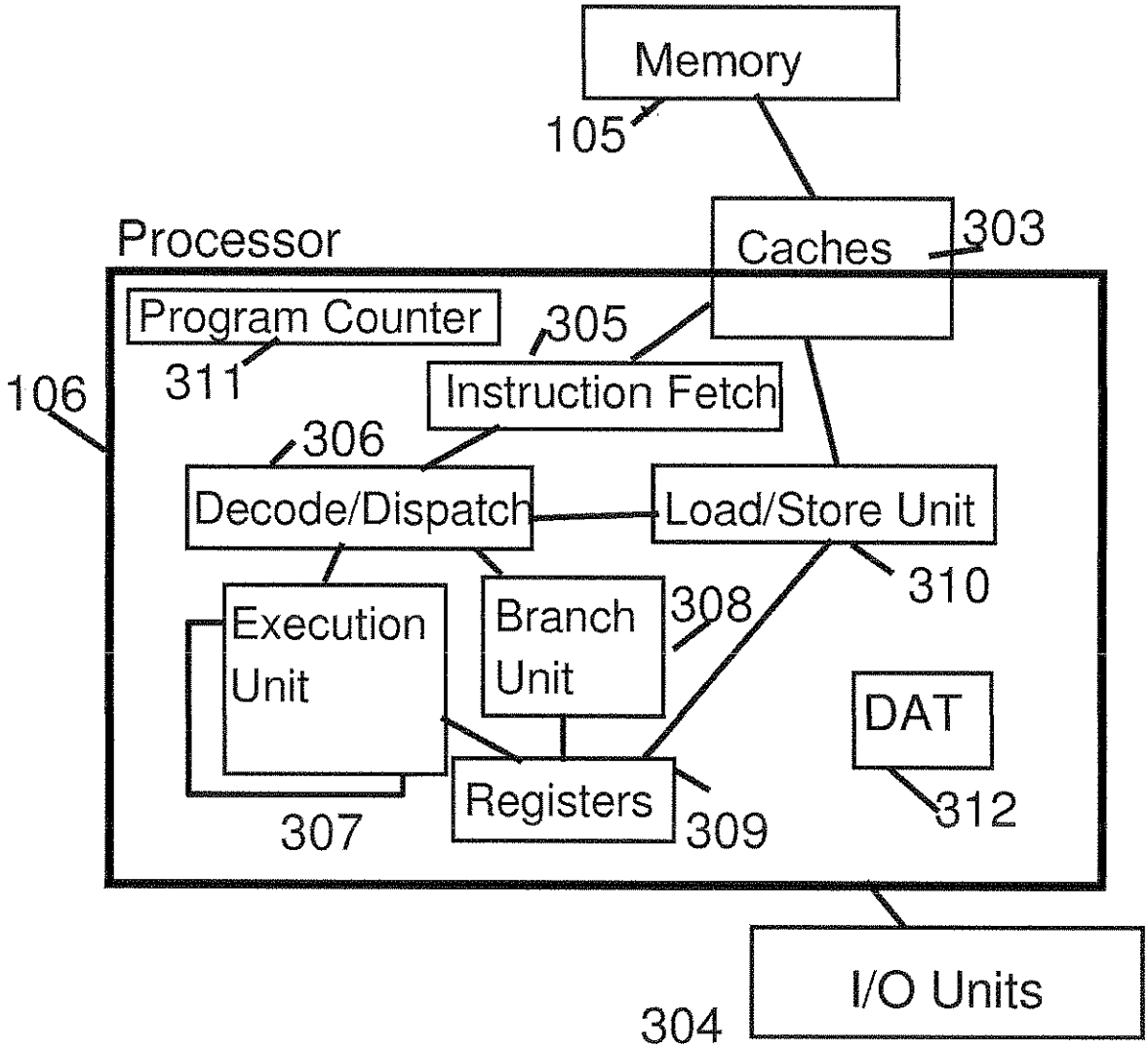
Memory
105
Caches
303
Processor
Program Counter
311
305
106
Instruction Fetch
306
Decode/Dispatch
Load/Store Unit
310
Execution Unit
Branch Unit
308
DAT
Registers
309
312
307
I/O Units
304

FIG. 3

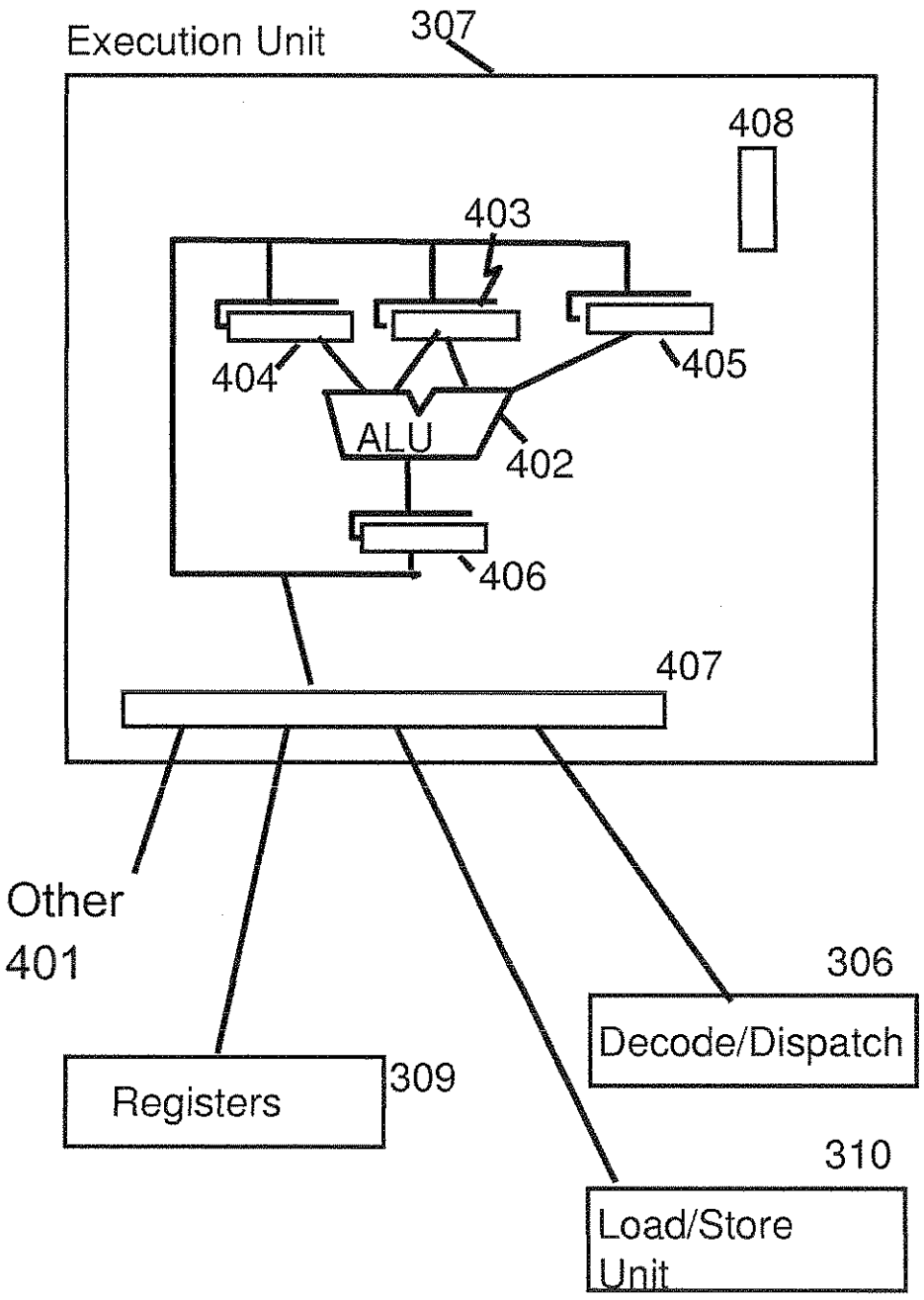
Execution Unit
307
408
403
404
405
ALU
402
406
407
Other
401
306
Decode/Dispatch
Registers
309
310
Load/Store
Unit

FIG. 4A

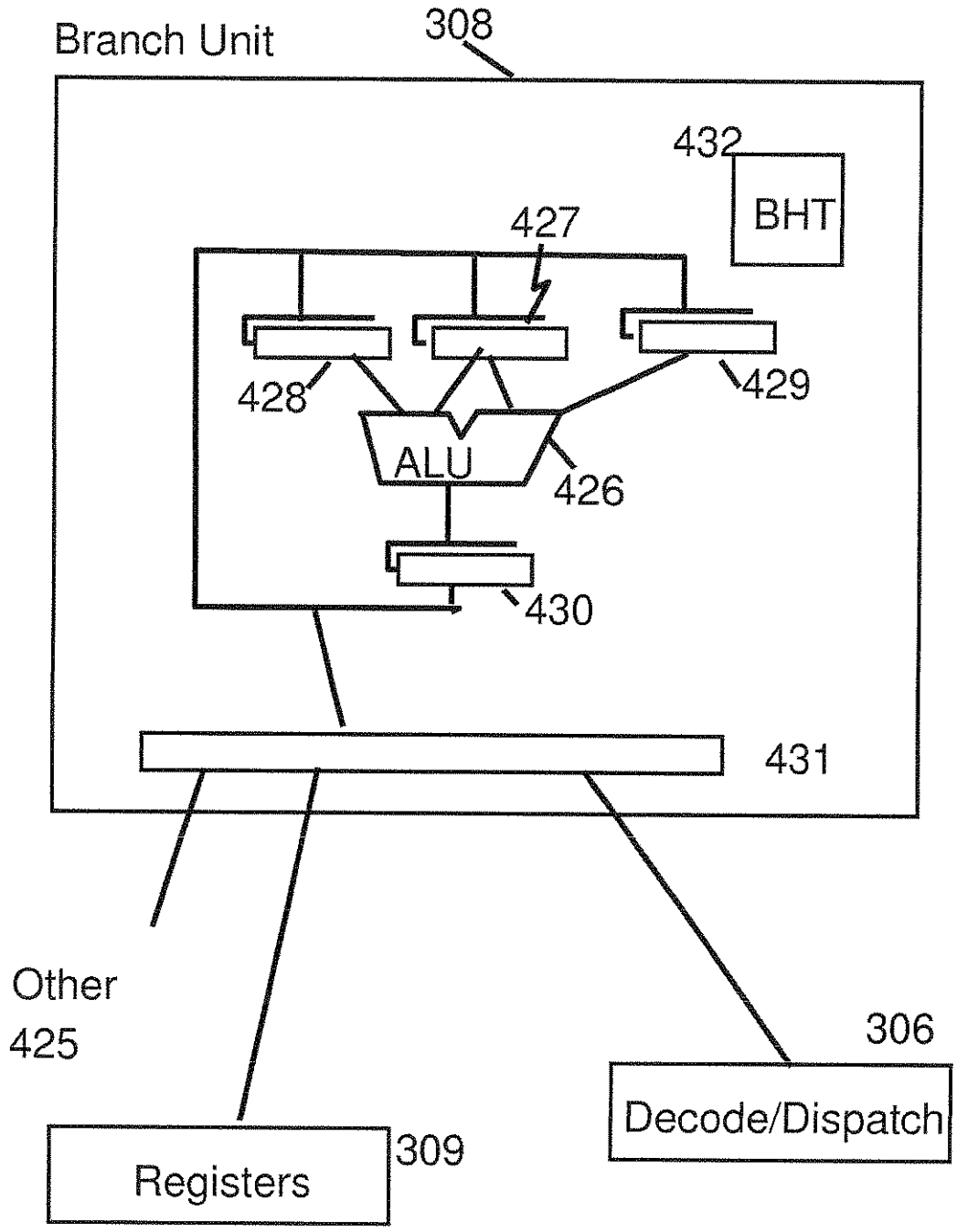
Branch Unit
308
432
BHT
427
428
429
ALU
426
430
431
Other
425
306
Decode/Dispatch
Registers
309

FIG. 4B

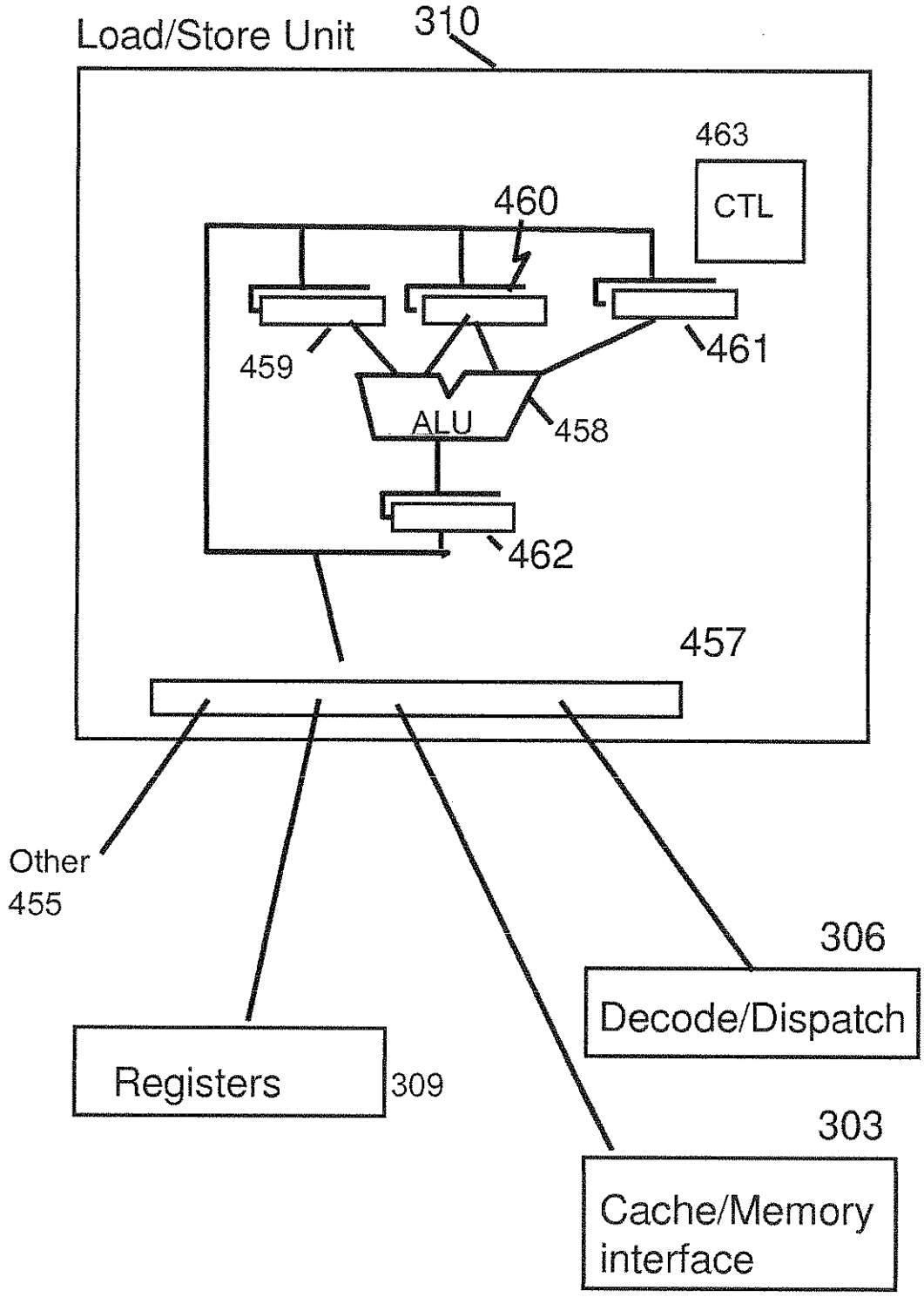
Load/Store Unit
310
463
CTL
460
459
461
ALU
458
462
457
Other
455
306
Decode/Dispatch
Registers
309
303
Cache/Memory
interface

FIG. 4C

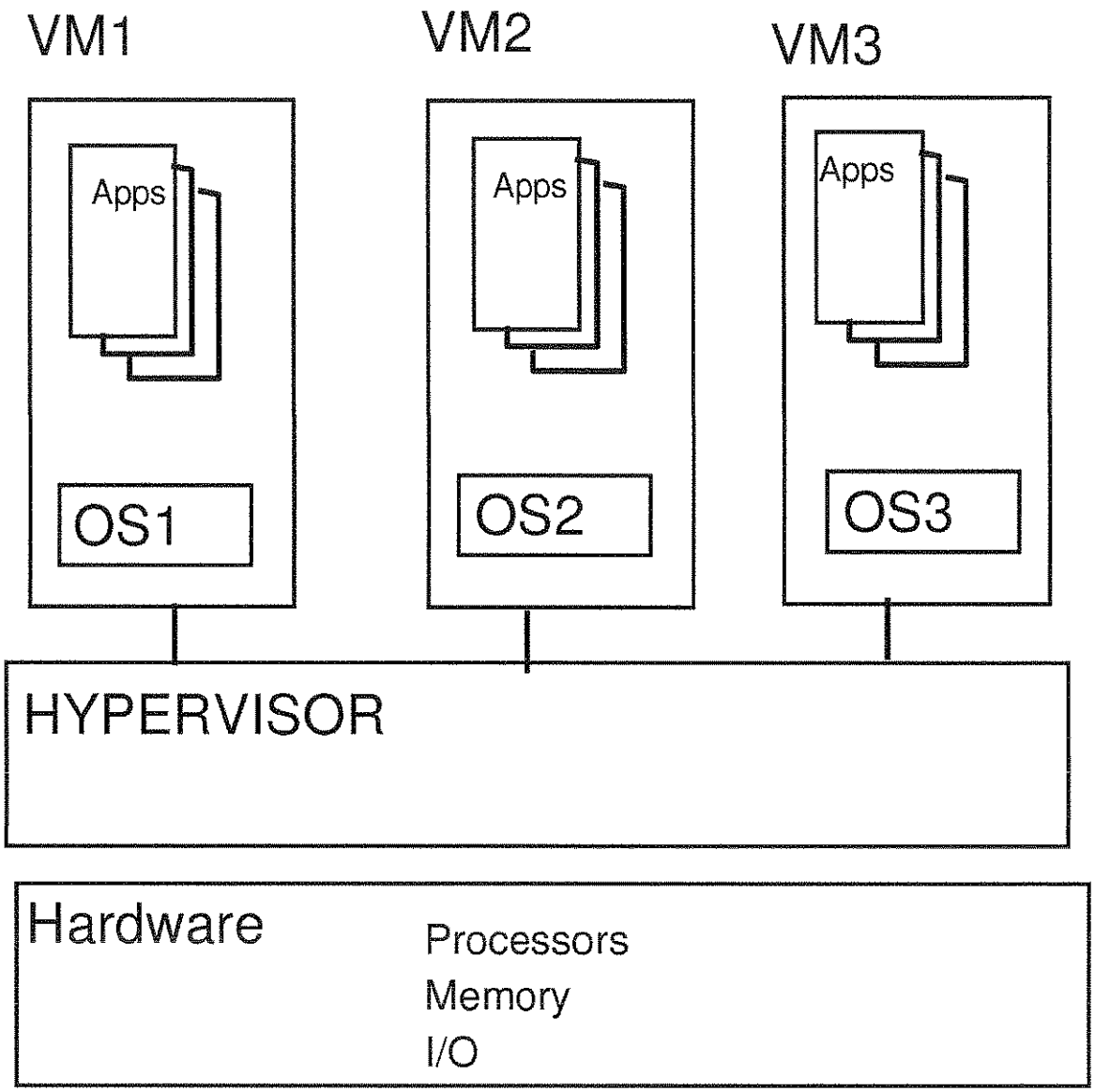
VM1
VM2
VM3
Apps
Apps
Apps
OS1
OS2
OS3
HYPERVISOR
Hardware
Processors
Memory
I/O

FIG. 5

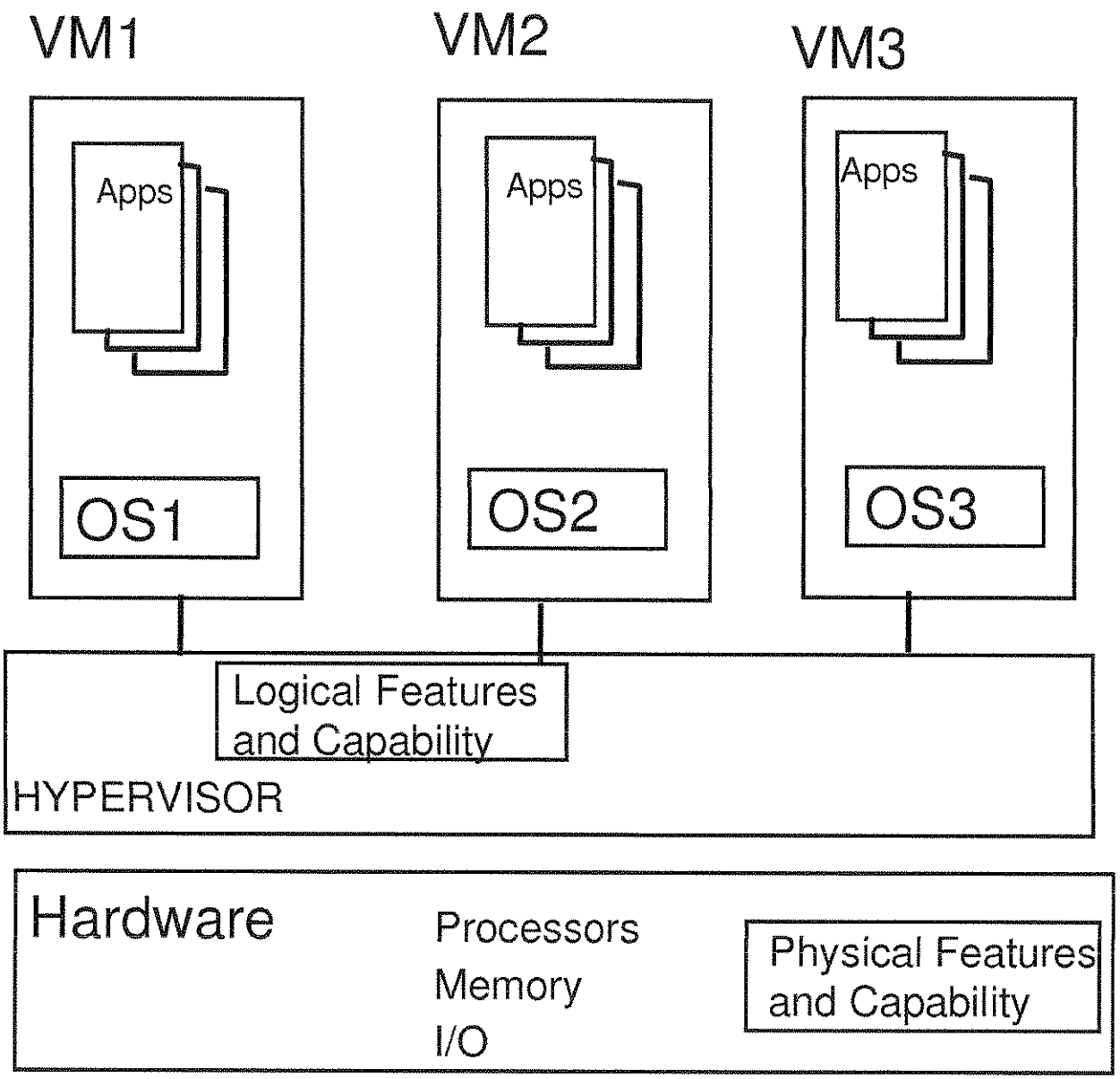
VM1
VM2
VM3
Apps
Apps
Apps
OS1
OS2
OS3
Logical Features and Capability
HYPERVISOR
Hardware
Processors
Memory
I/O
Physical Features and Capability

FIG. 6

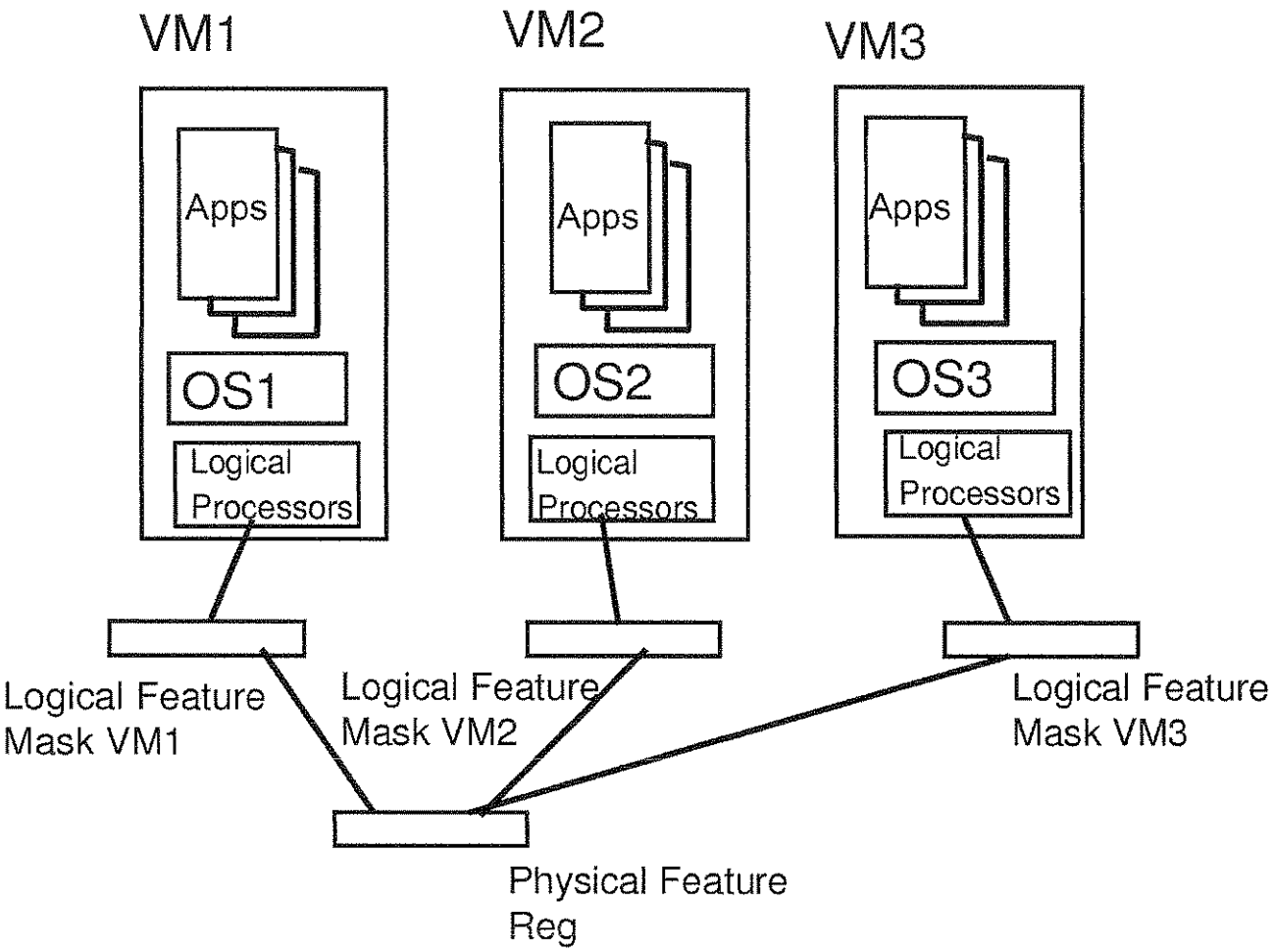
VM1
VM2
VM3
Apps
Apps
Apps
OS1
OS2
OS3
Logical Processors
Logical Processors
Logical Processors
Logical Feature Mask VM1
Logical Feature Mask VM2
Logical Feature Mask VM3
Physical Feature Reg

FIG. 7

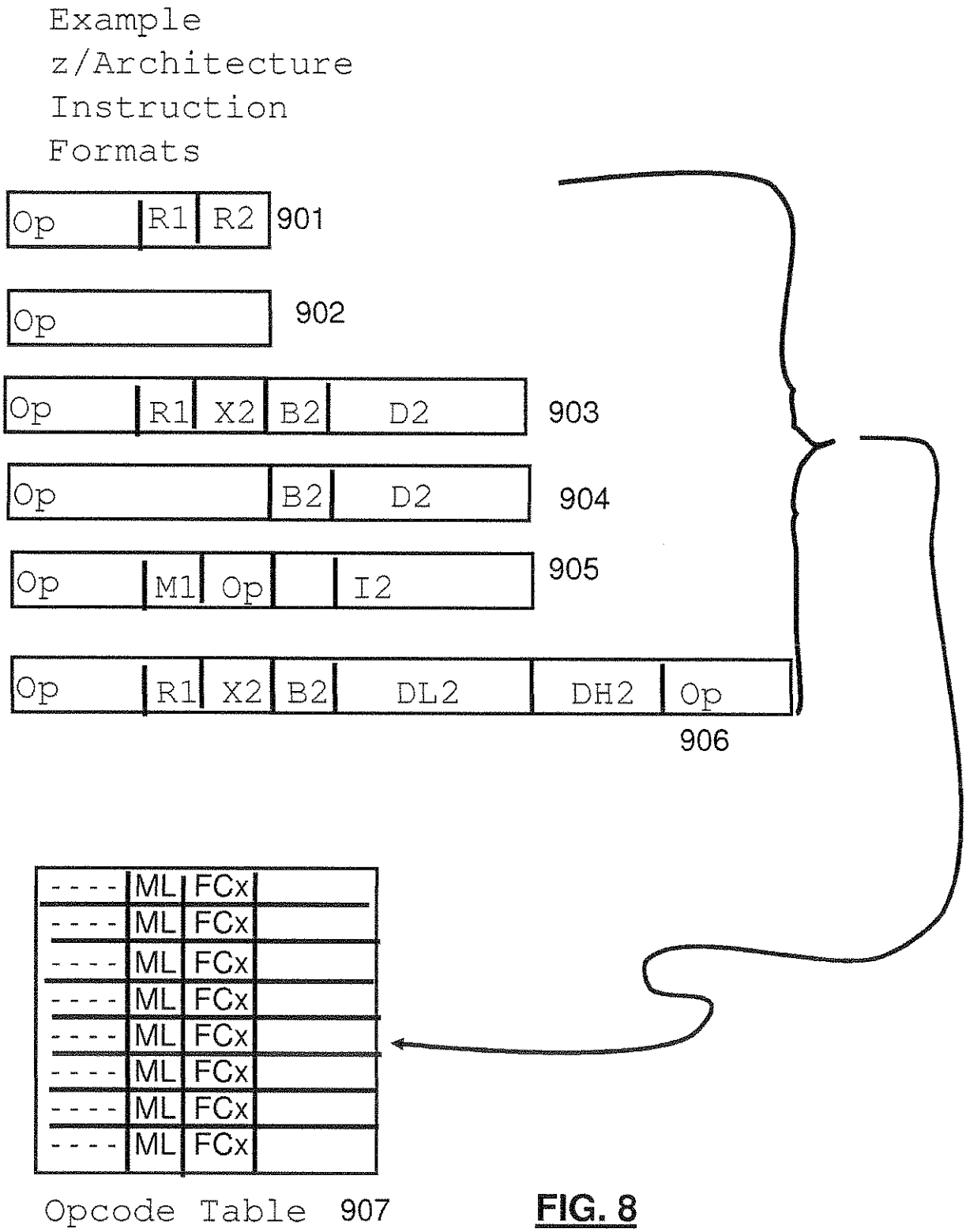
Example
z/Architecture
Instruction
Formats
Op
R1
R2
901
Op
902
Op
R1
X2
B2
D2
903
Op
B2
D2
904
Op
M1
Op
I2
905
Op
R1
X2
B2
DL2
DH2
Op
906
- - - -
ML
FCx
Opcode Table 907

FIG. 8

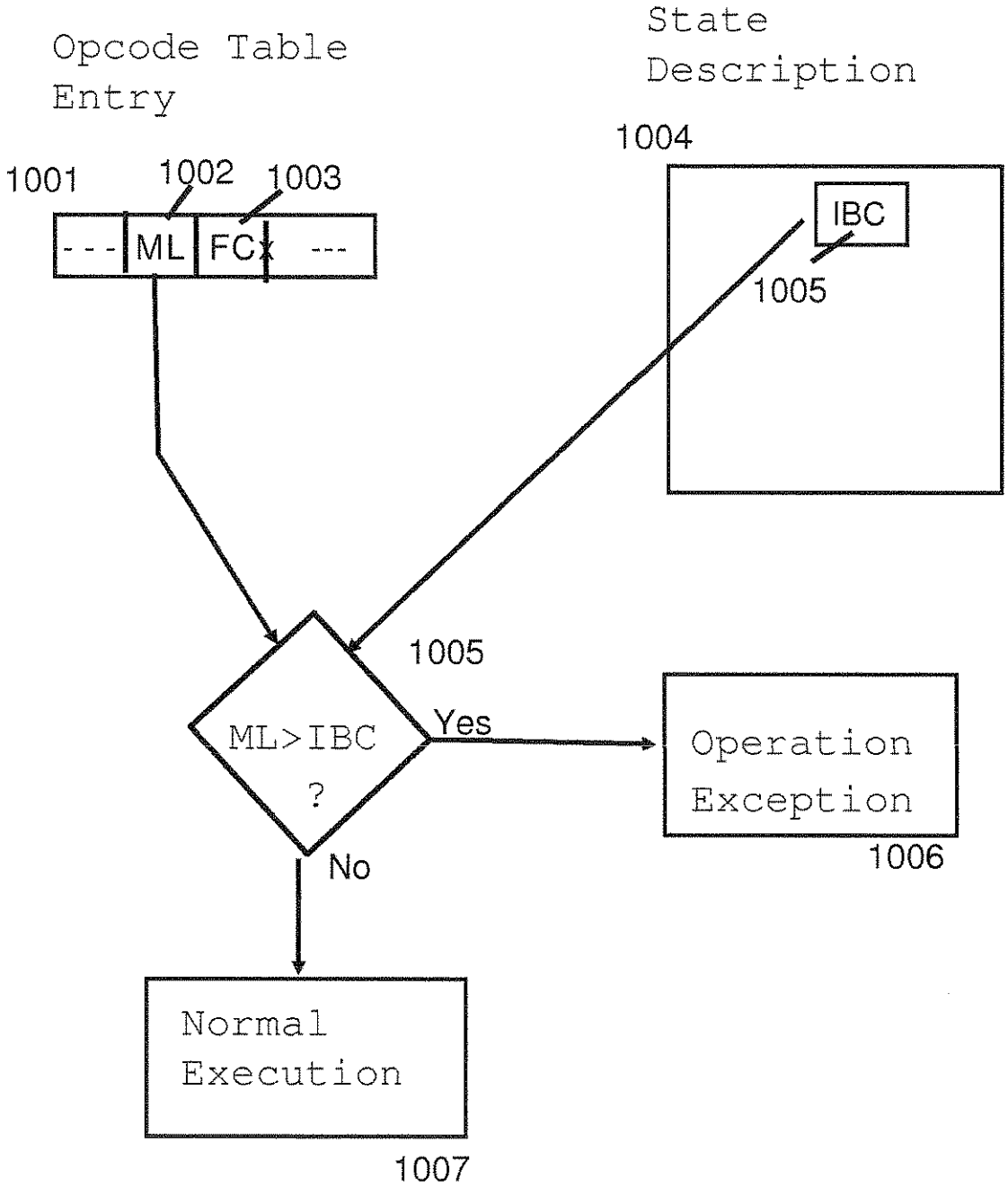
Opcode Table Entry
State Description
1001
1002
1003
1004
- - -
ML
FCx

IBC
1005
1005
ML>IBC ?
Yes
No
Operation Exception
1006
Normal Execution
1007

FIG. 9

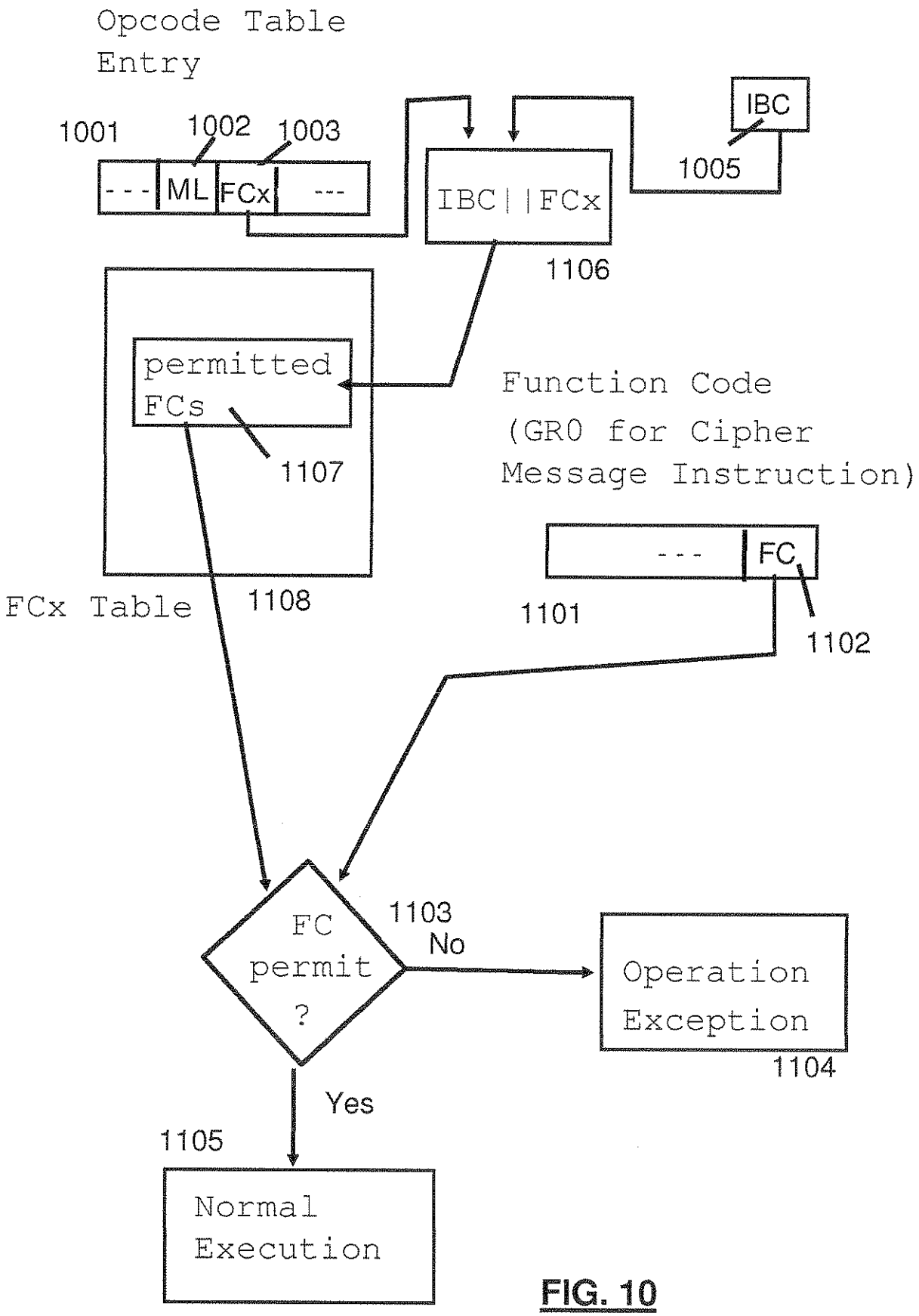
Opcode Table Entry
1001
1002
1003

ML
FCx

IBC
1005
IBC||FCx
1106
permitted FCs
1107
Function Code (GR0 for Cipher Message Instruction)
FCx Table
1108

FC
1101
1102
FC permit ?
1103
No
Operation Exception
1104
Yes
1105
Normal Execution

FIG. 10

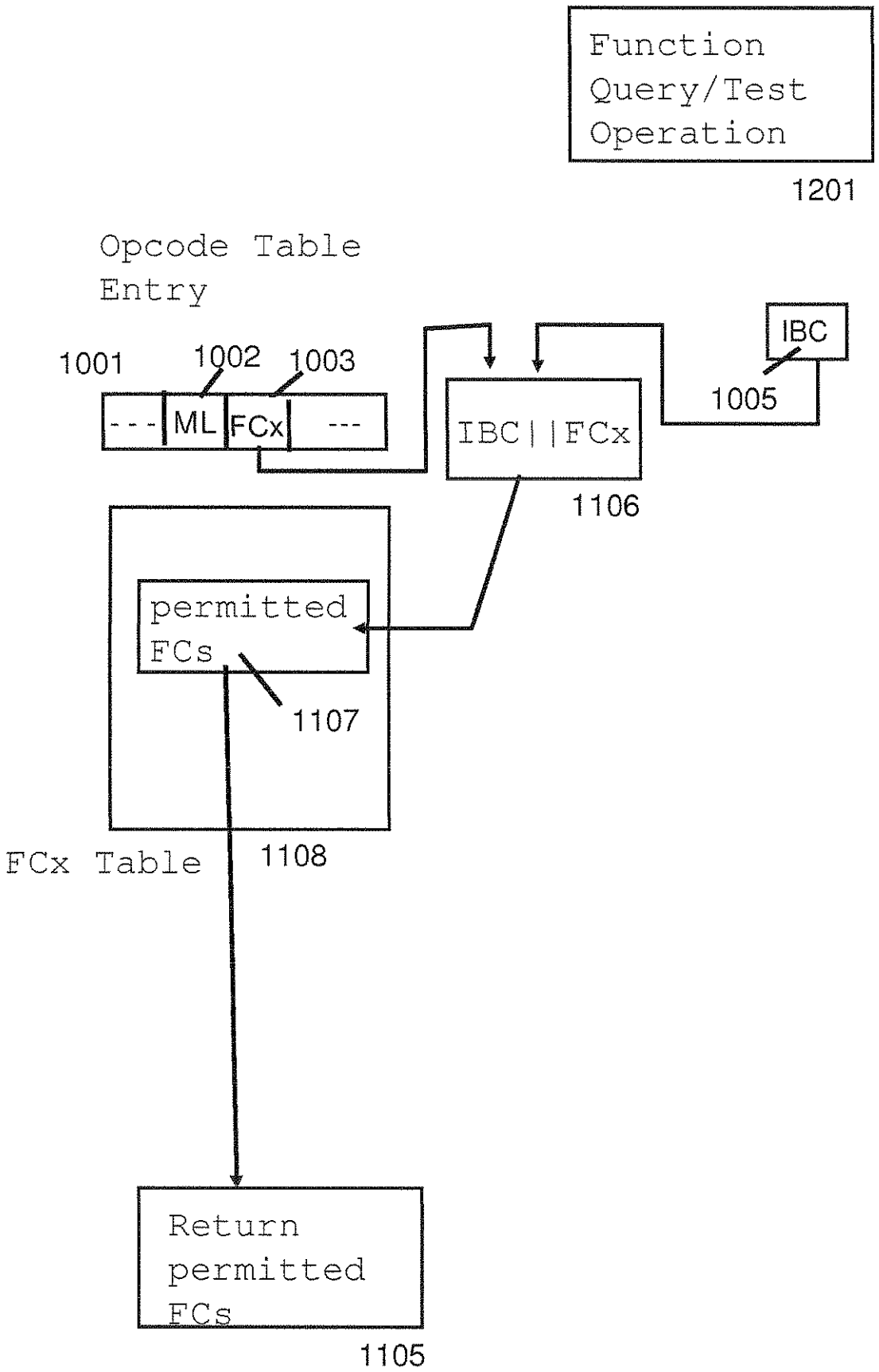
Function Query/Test Operation
1201
Opcode Table Entry
1001
1002
1003

ML
FCx

IBC
1005
IBC||FCx
1106
permitted FCs
1107
1108
FCx Table
Return permitted FCs
1105

FIG. 11

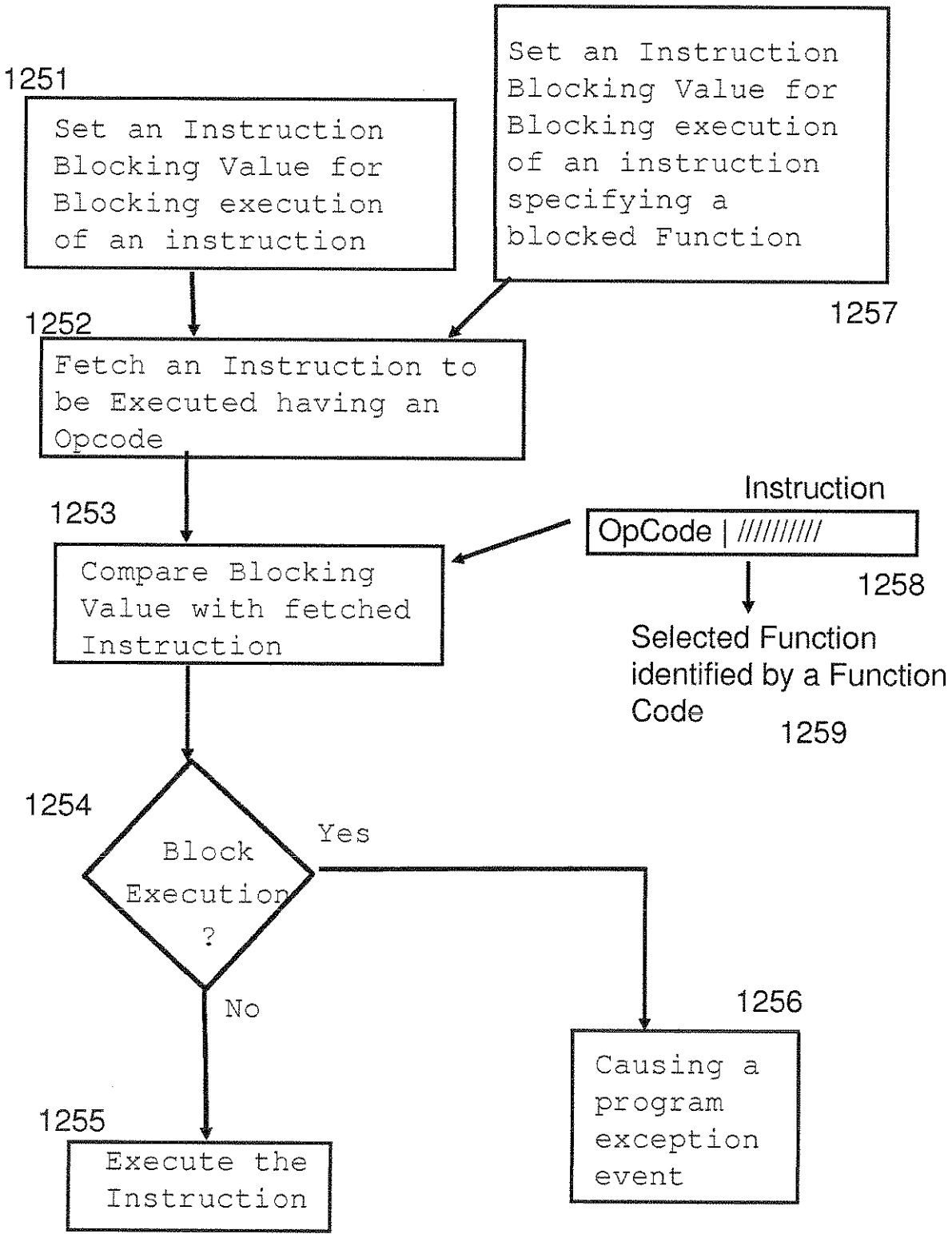
1251
Set an Instruction Blocking Value for Blocking execution of an instruction
Set an Instruction Blocking Value for Blocking execution of an instruction specifying a blocked Function
1257
1252
Fetch an Instruction to be Executed having an Opcode
Instruction
OpCode | //////////
1258
1253
Compare Blocking Value with fetched Instruction
Selected Function identified by a Function Code
1259
1254
Block Execution ?
Yes
No
1256
Causing a program exception event
1255
Execute the Instruction

FIG. 12

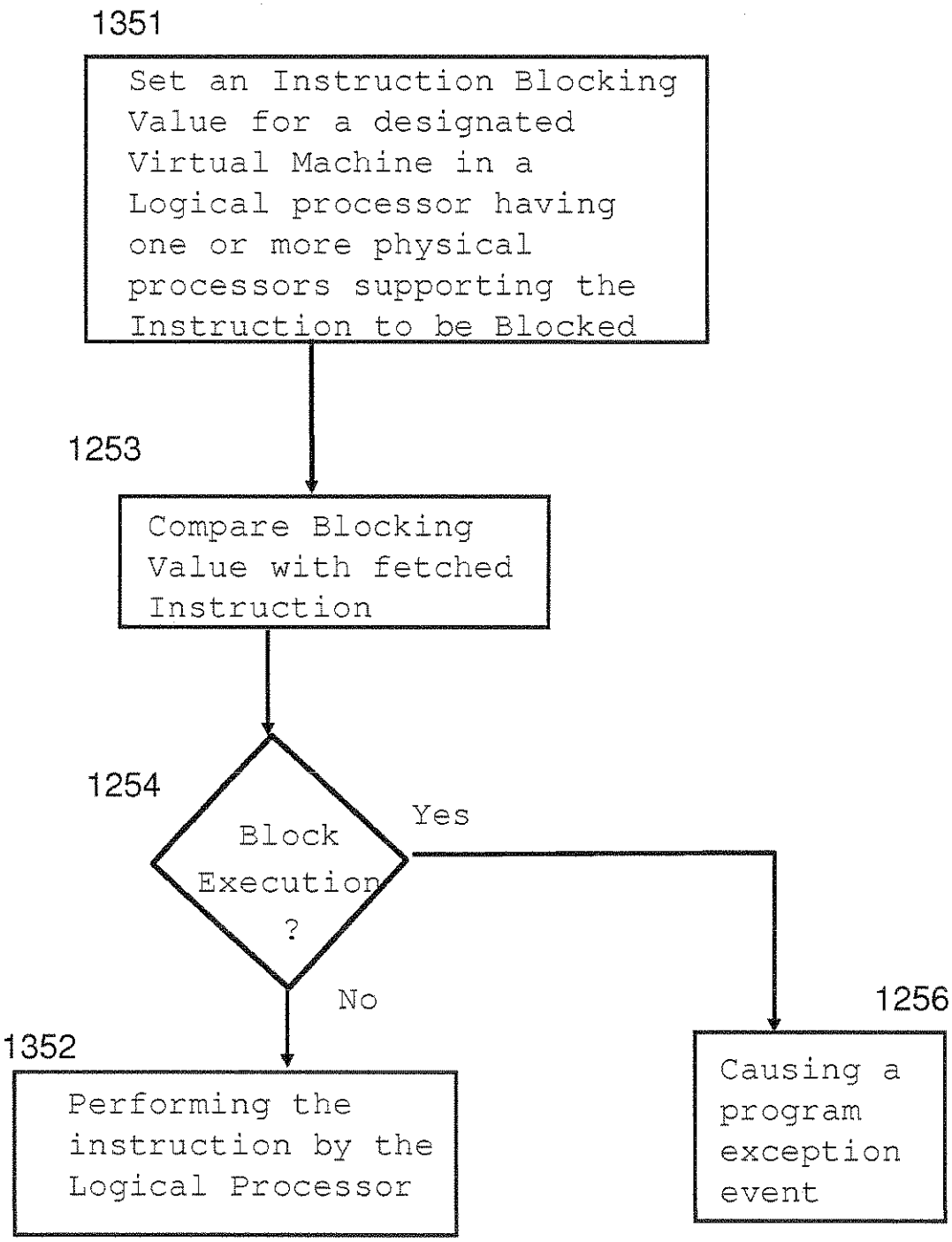
1351
Set an Instruction Blocking Value for a designated Virtual Machine in a Logical processor having one or more physical processors supporting the Instruction to be Blocked
1253
Compare Blocking Value with fetched Instruction
1254
Block Execution ?
Yes
No
1256
Causing a program exception event
1352
Performing the instruction by the Logical Processor

FIG. 13

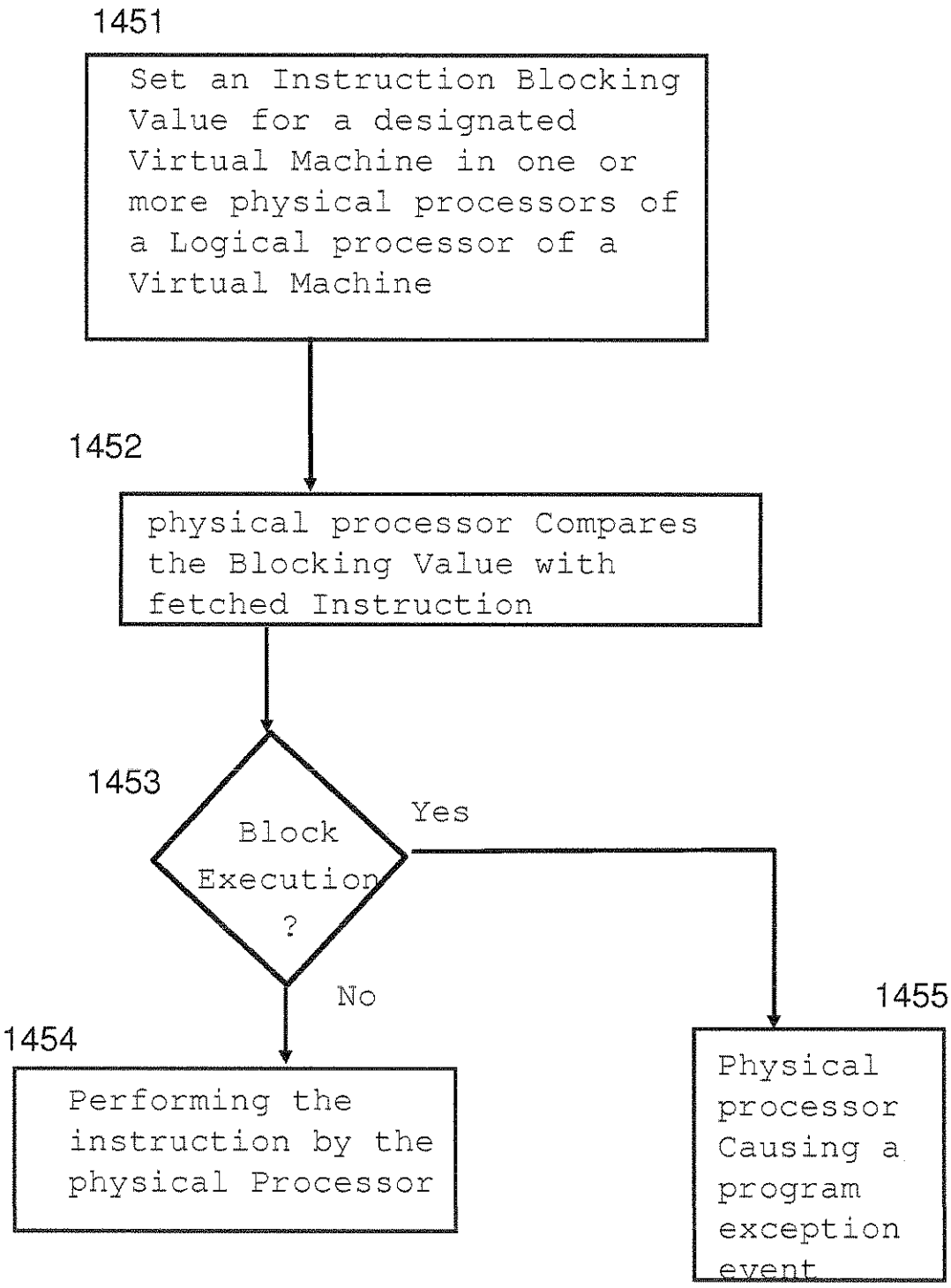
1451
Set an Instruction Blocking Value for a designated Virtual Machine in one or more physical processors of a Logical processor of a Virtual Machine
1452
physical processor Compares the Blocking Value with fetched Instruction
1453
Block Execution ?
Yes
No
1454
Performing the instruction by the physical Processor
1455
Physical processor Causing a program exception event

FIG. 14

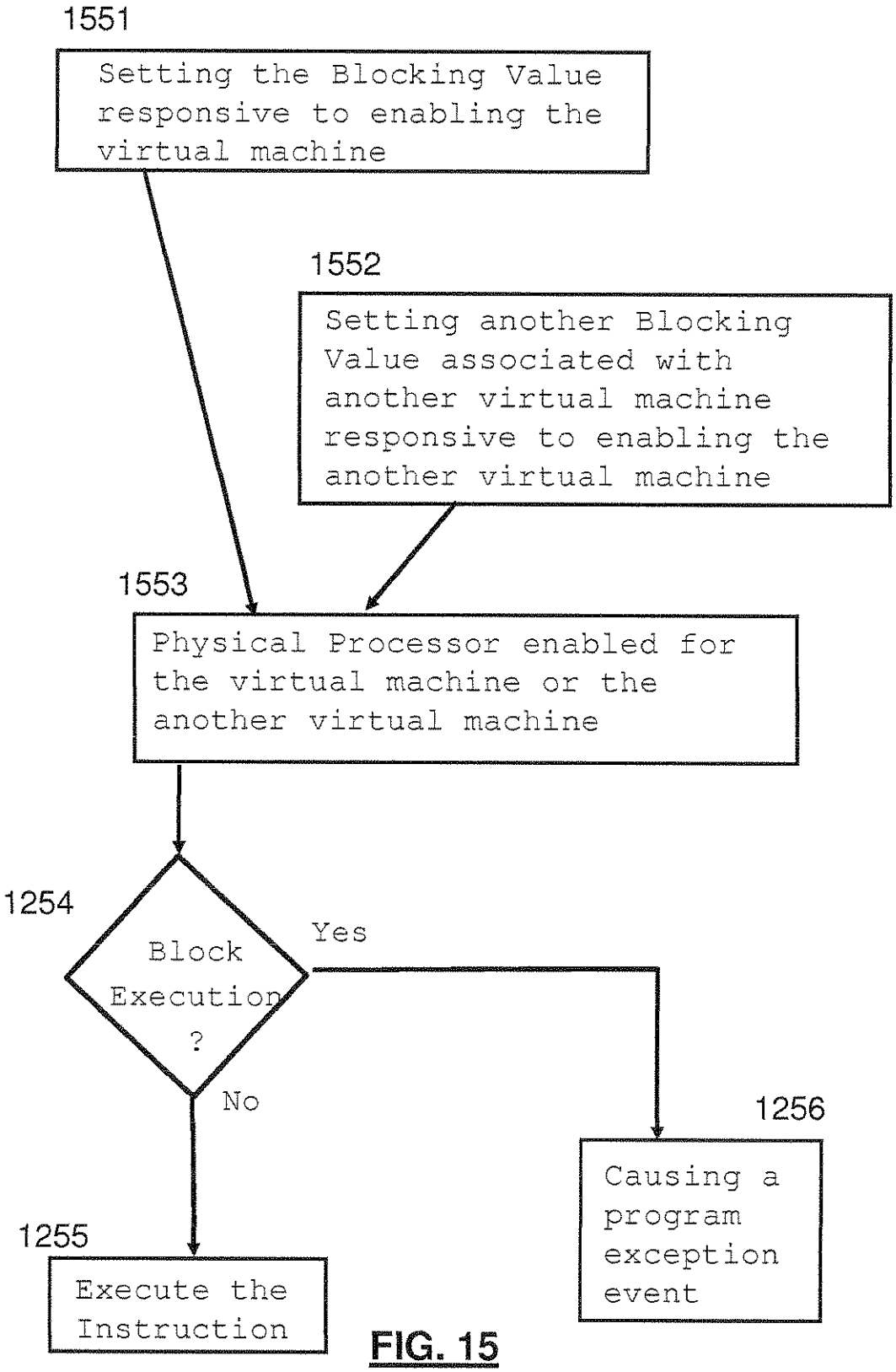
1551
Setting the Blocking Value responsive to enabling the virtual machine
1552
Setting another Blocking Value associated with another virtual machine responsive to enabling the another virtual machine
1553
Physical Processor enabled for the virtual machine or the another virtual machine
1254
Block Execution ?
Yes
No
1256
Causing a program exception event
1255
Execute the Instruction

FIG. 15