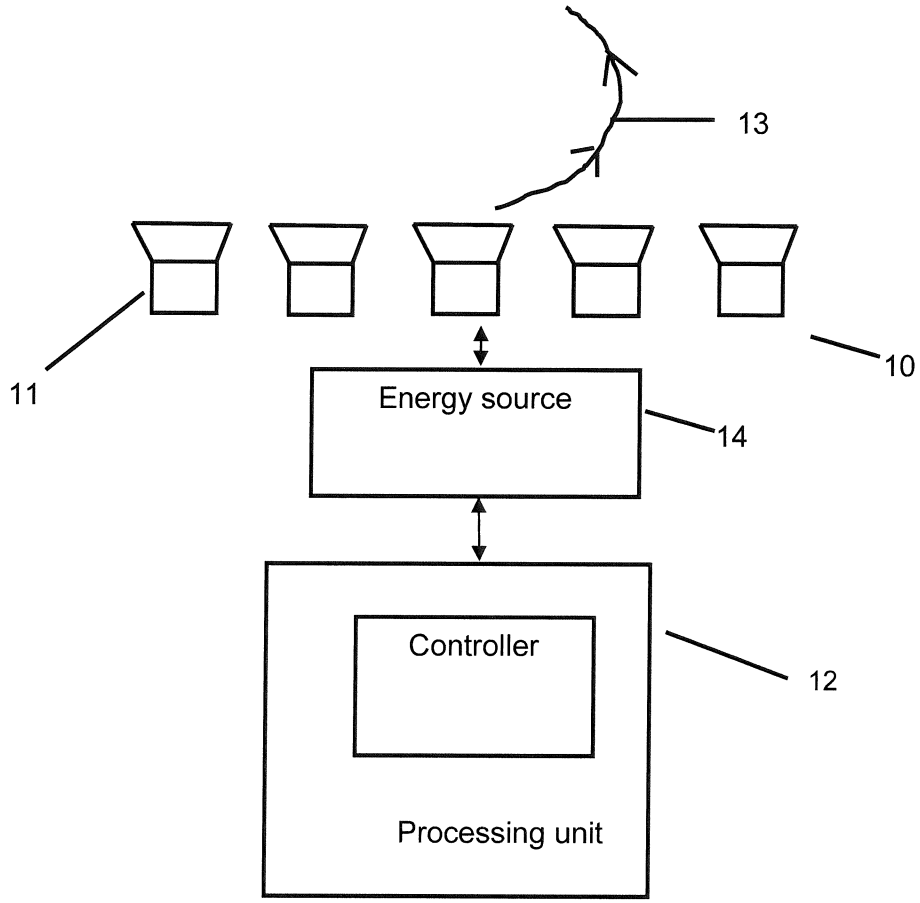
13
11
10
Energy source
14
Controller
12
Processing unit

Fig. 1

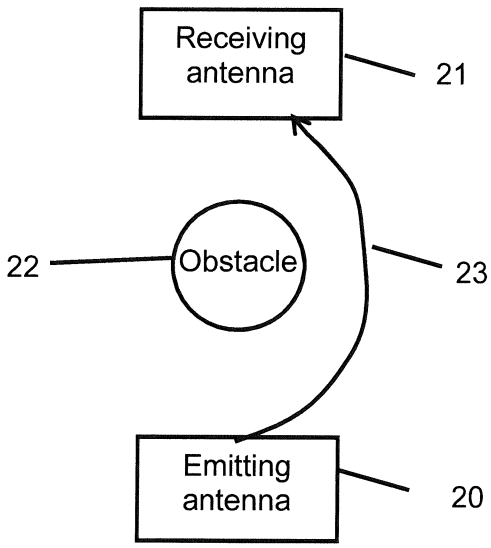
Receiving antenna
21
22
Obstacle
23
Emitting antenna
20

Fig. 2

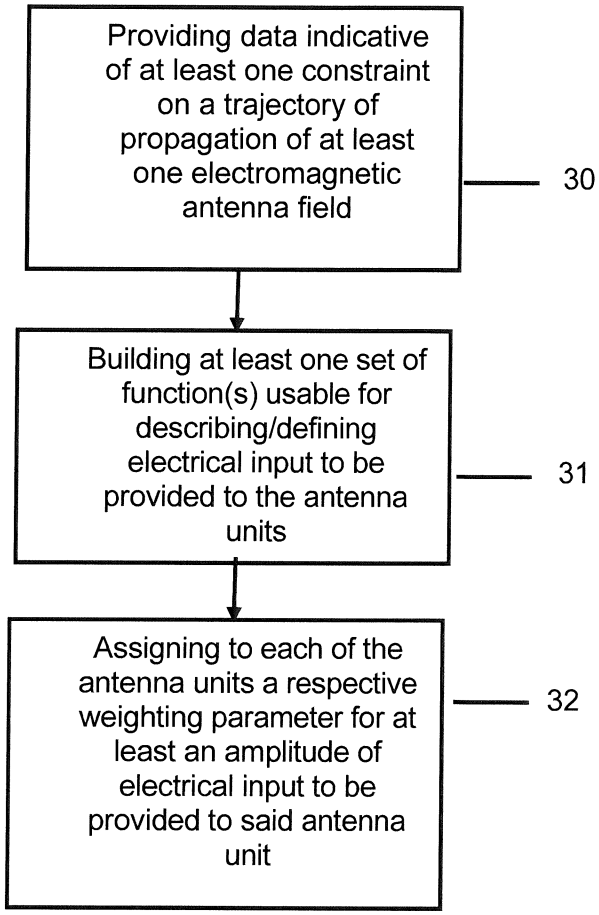
Providing data indicative of at least one constraint on a trajectory of propagation of at least one electromagnetic antenna field
30
Building at least one set of function(s) usable for describing/defining electrical input to be provided to the antenna units
31
Assigning to each of the antenna units a respective weighting parameter for at least an amplitude of electrical input to be provided to said antenna unit
32

Fig. 3

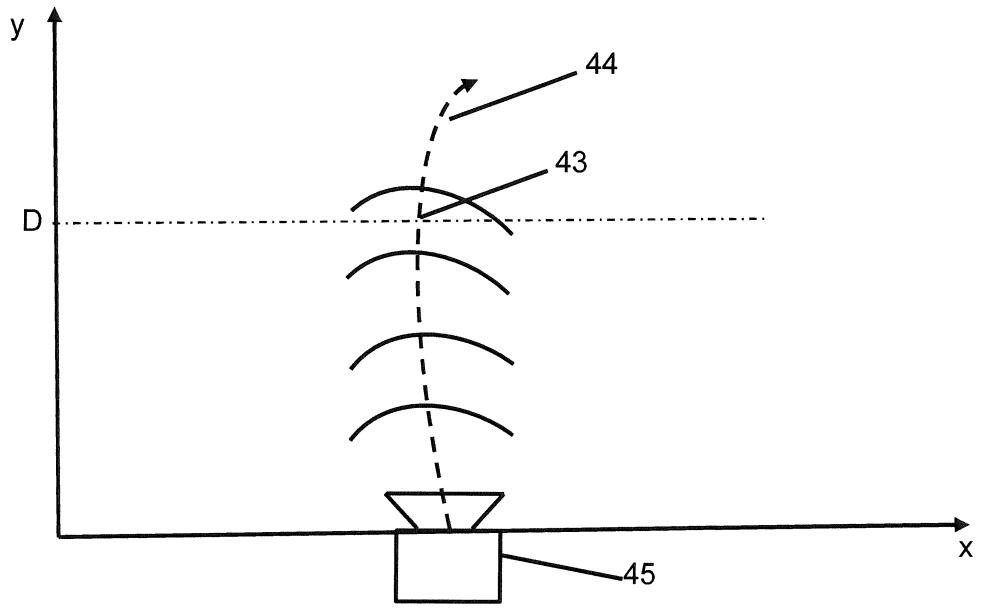

Fig. 4A

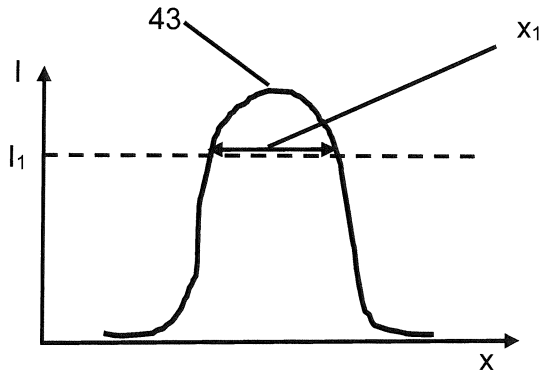

Fig. 4B

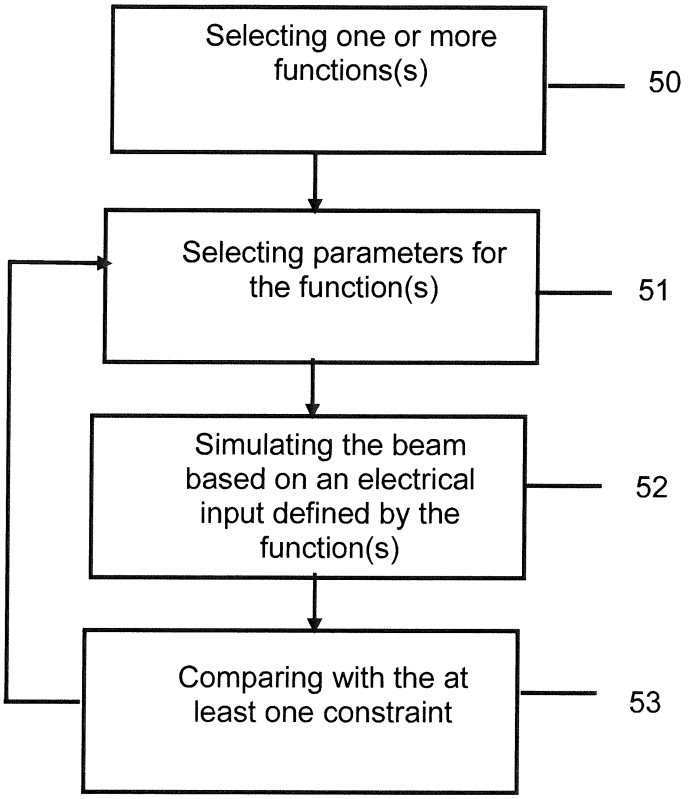
Selecting one or more functions(s)
50
Selecting parameters for the function(s)
51
Simulating the beam based on an electrical input defined by the function(s)
52
Comparing with the at least one constraint
53

Fig. 5

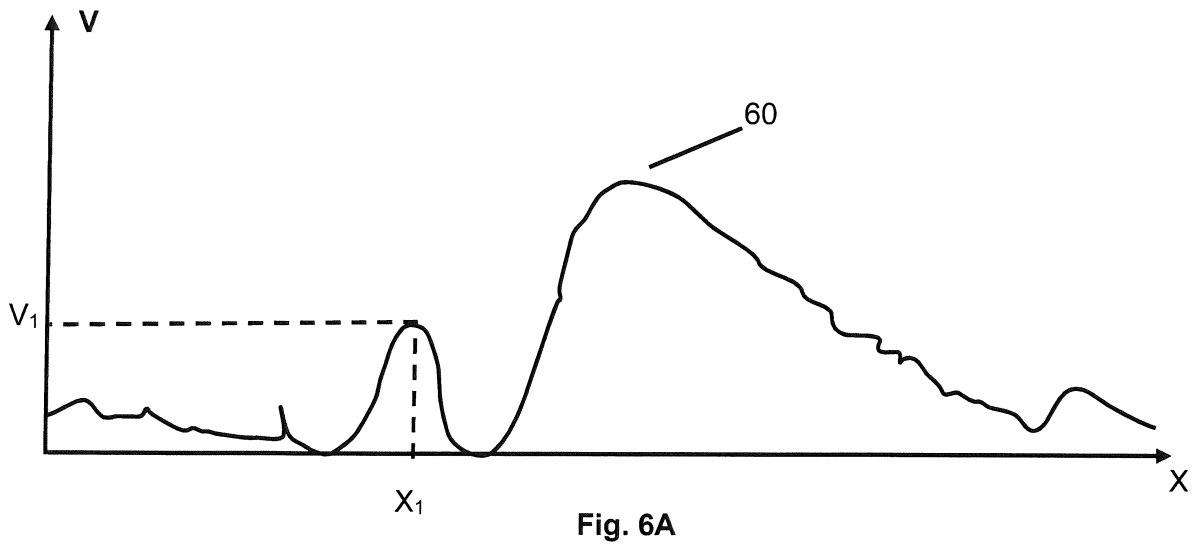
V
60
V1
X1
X

Fig. 6A

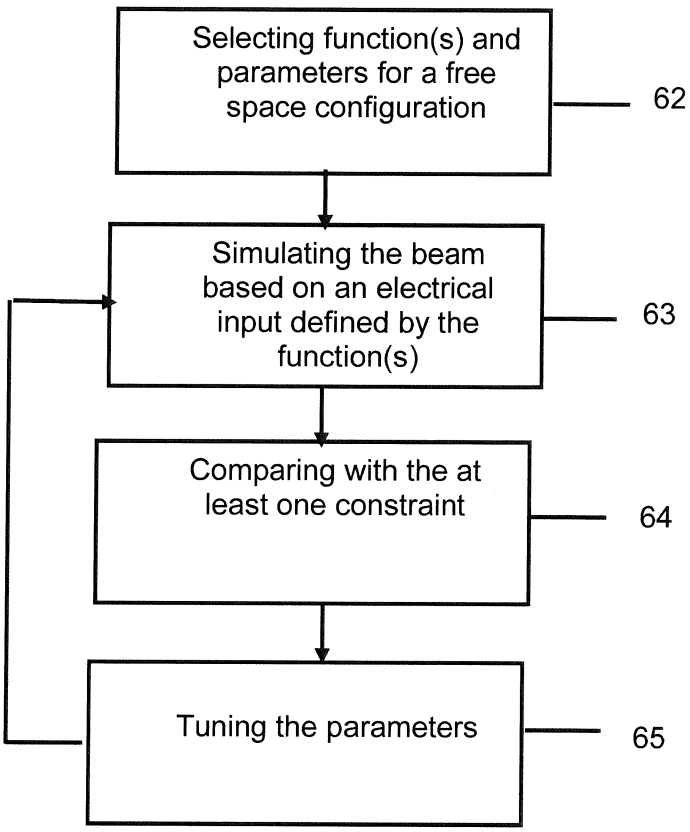
Selecting function(s) and parameters for a free space configuration
62
Simulating the beam based on an electrical input defined by the function(s)
63
Comparing with the at least one constraint
64
Tuning the parameters
65

Fig. 6B

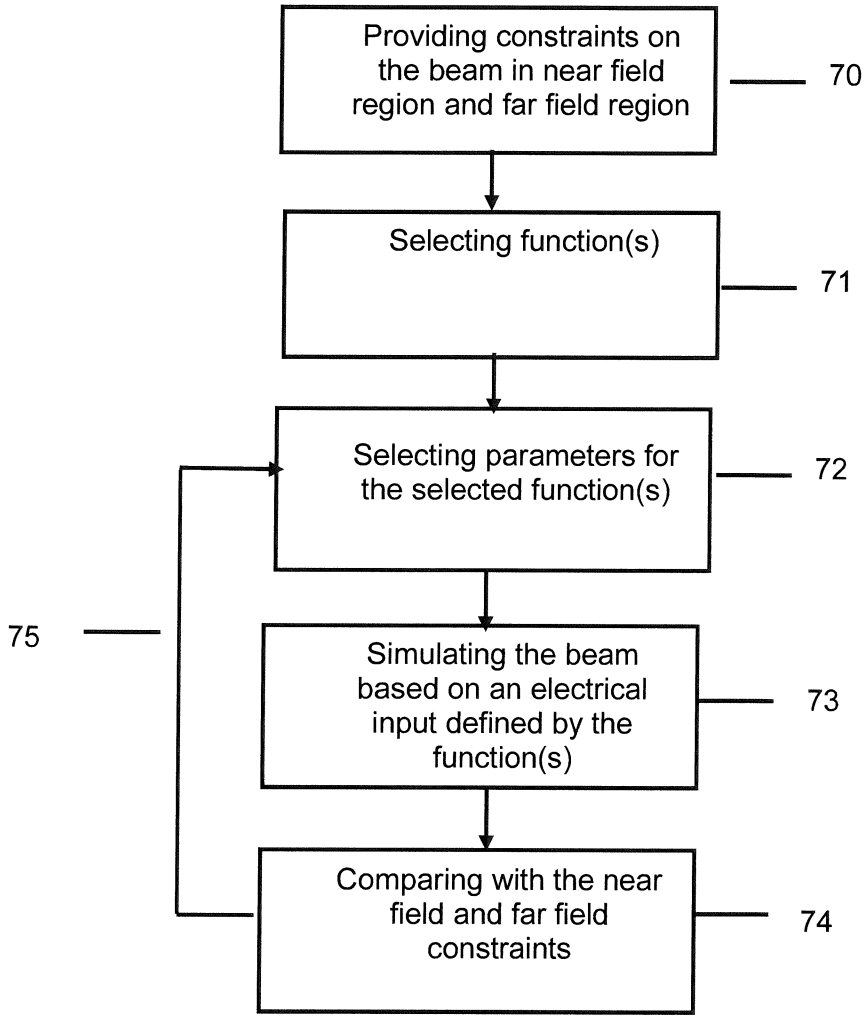
Providing constraints on the beam in near field region and far field region
70
Selecting function(s)
71
Selecting parameters for the selected function(s)
72
75
Simulating the beam based on an electrical input defined by the function(s)
73
Comparing with the near field and far field constraints
74

Fig. 7

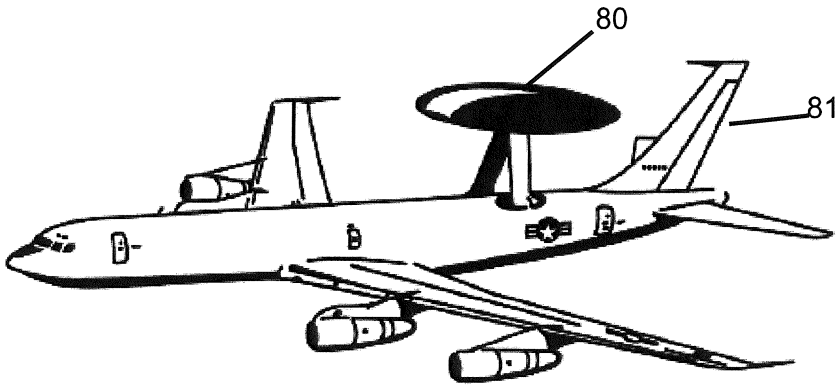

Fig. 8

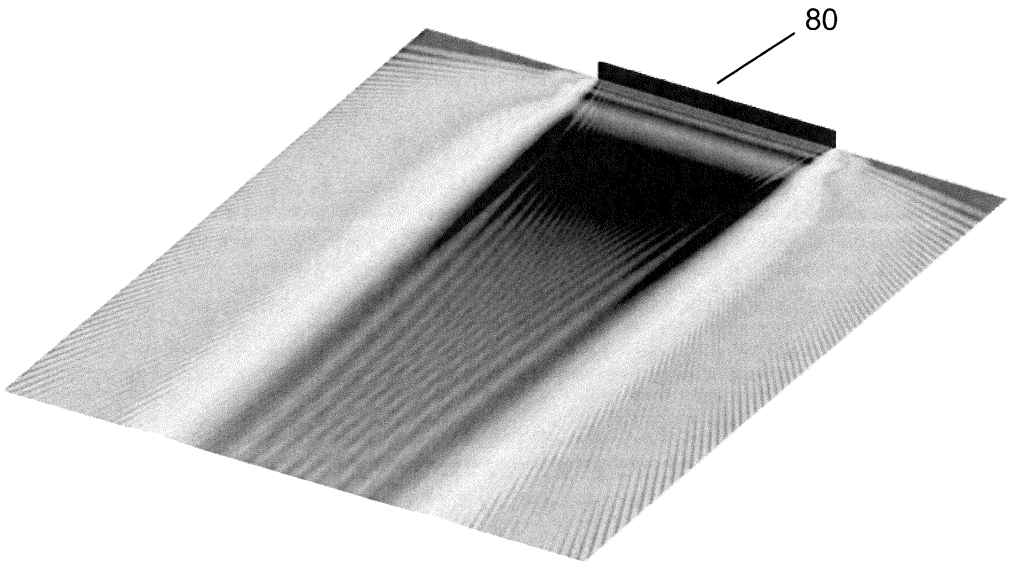

Fig. 9A

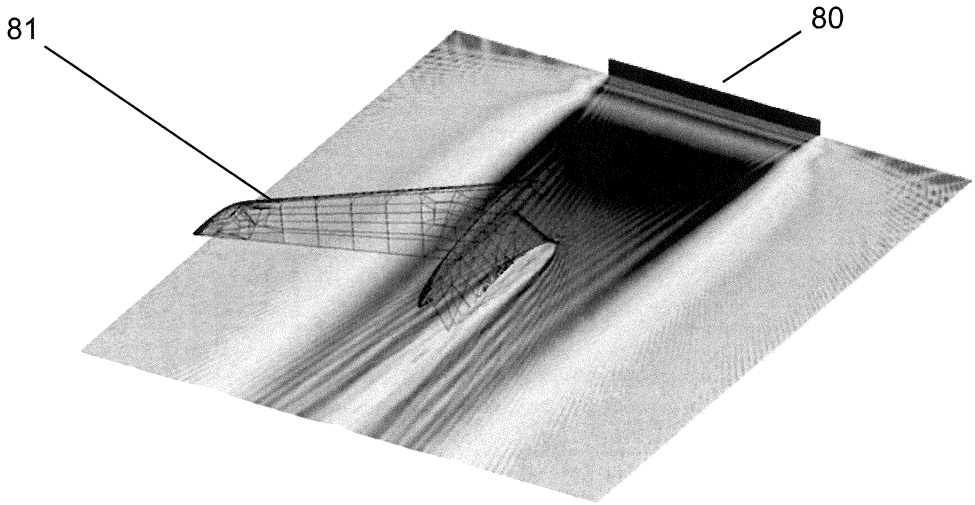

Fig. 9B

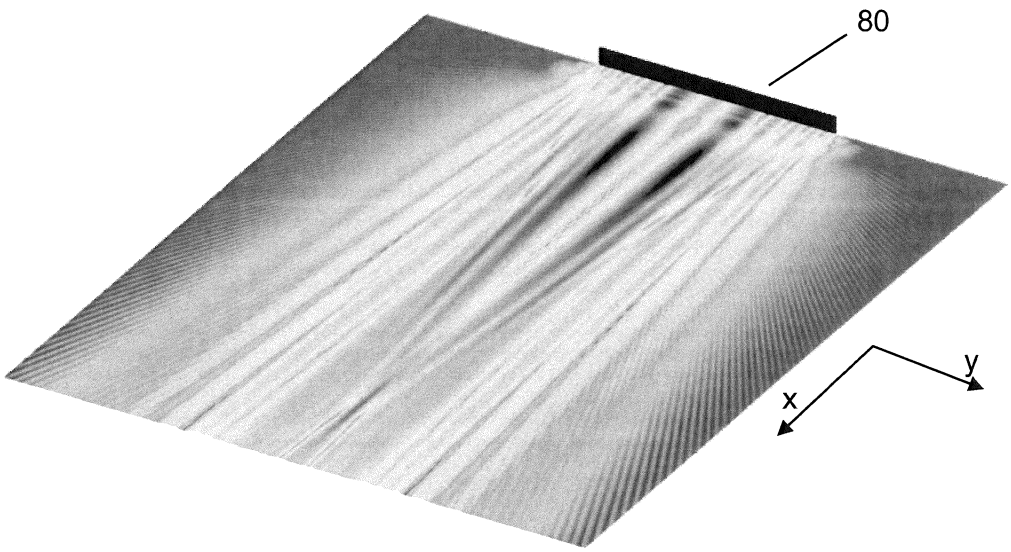

Fig. 10A

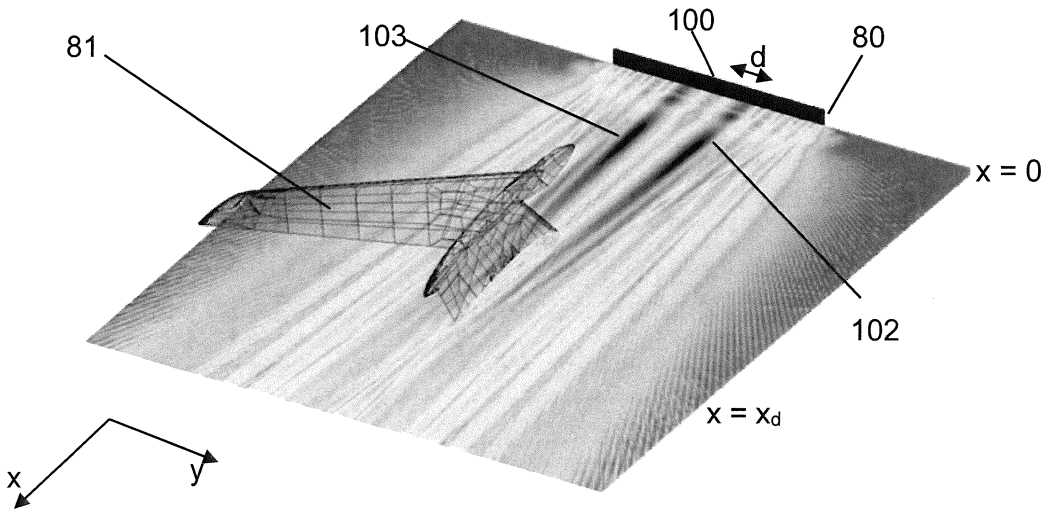

Fig. 10B

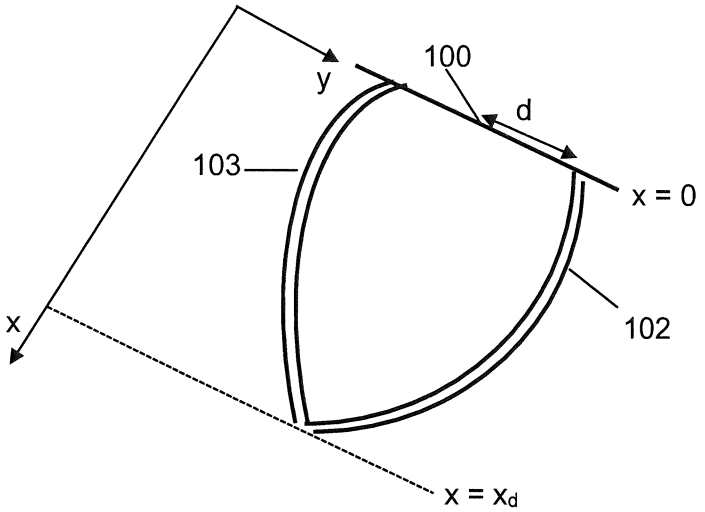

Fig. 10C

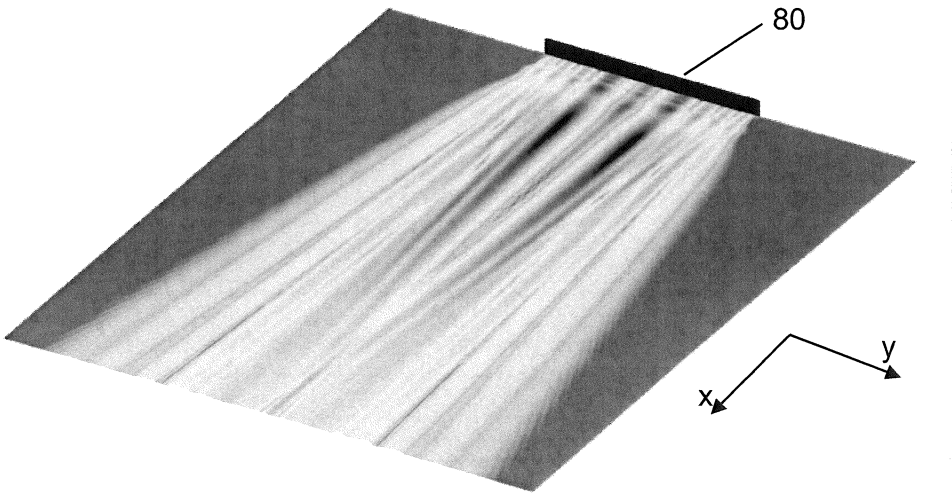

Fig. 11A

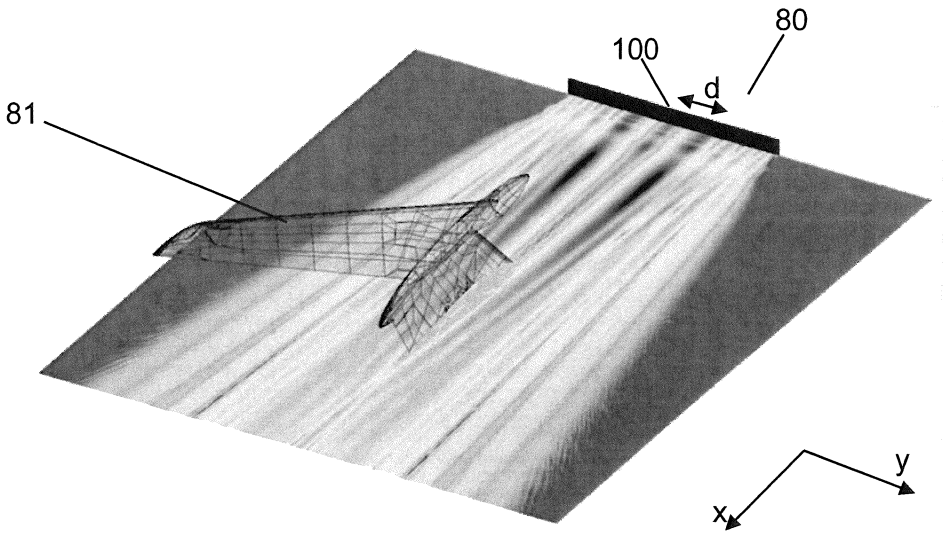

Fig. 11B

	Beam width				Peak value		
	Free space		With tail		Free space (dB)	Tail (dB)	120
	El (°)	Az (°)	El (°)	Az (°)			
Uniform	4.21	0.49	4.24	0.49	48.1	38.1	121
d=0.7m	4.21	0.57	4.24	0.57	42.2	37.6	122
d=0.9m	4.21	0.57	4.21	0.57	41.7	37.7	123
d=1.0m	4.21	0.52	4.21	0.57	42.8	37.3	124
d=1.4m	4.21	0.49	4.21	0.49	42.8	36.3	

Fig. 12

	1st side lobe		2nd side lobe		3rd side lobe		130
	FS	Tail	FS	Tail	FS	Tail	
Uniform	-13.3	-8.9	-17.8	-22.1	-20.8	-15.2	131
d=0.7m	-25.5	-12.6	-26.2	-18.6	-27.5	-15.3	132
d=0.9m	-11	-12.4	-9	-10.1	-11.7	-12.4	

Fig. 13

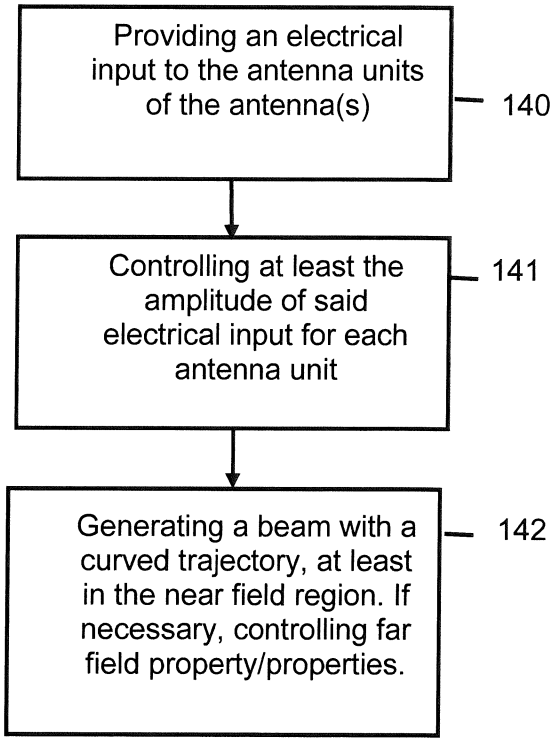

Fig. 14

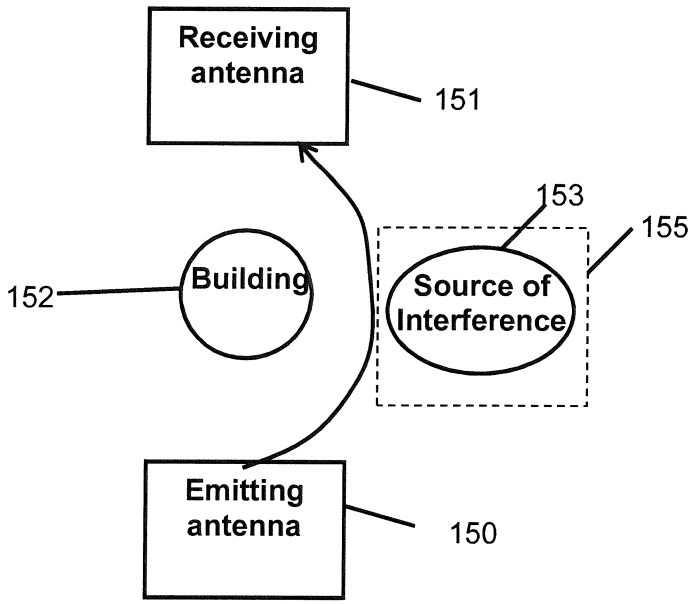
Receiving antenna
151
153
155
Building
152
Source of Interference
Emitting antenna
150

Fig. 15