(12) INTERNATIONAL APPLICATION PUBLISHED UNDER THE PATENT COOPERATION TREATY (PCT)

(19) World Intellectual Property Organization
International Bureau

(43) International Publication Date
02 January 2020 (02.01.2020)

WIPO | PCT

(10) International Publication Number
WO 2020/005901 A1

(51) International Patent Classification:
*C30B 15/20* (2006.01) *C30B 29/06* (2006.01)

(21) International Application Number:
PCT/US2019/038923

(22) International Filing Date:
25 June 2019 (25.06.2019)

(25) Filing Language: English

(26) Publication Language: English

(30) Priority Data:
16/020,698 27 June 2018 (27.06.2018) US

(71) Applicant: **GLOBALWAFERS CO., LTD.** [CN/CN]; No. 8 Industrial East Road 2, Science-Based Industrial Park, Hsinchu (TW).

(72) Inventors: **RYU, JaeWoo**; 501 Pearl Drive, St. Peters, Missouri 63376 (US). **PHILLIPS, Richard J.**; 501 Pearl Drive, St. Peters, Missouri 63376 (US). **STANDLEY, Robert**; 501 Pearl Drive, St. Peters, Missouri 63376 (US). **LEE, HyungMin**; 501 Pearl Drive, St. Peters, Missouri 63376 (US). **LEE, YoungJung**; 501 Pearl Drive, St. Peters, Missouri 63376 (US). **HUDSON, Carissima Marie**; 501 Pearl Drive, St. Peters, Missouri 63376 (US).

(74) Agent: **SCHUTH, Richard A.** et al.; ARMSTRONG TEASDALE LLP, 7700 Forsyth Blvd., Suite 1800, St. Louis, Missouri 63105 (US).

(81) Designated States *(unless otherwise indicated, for every kind of national protection available)*: AE, AG, AL, AM, AO, AT, AU, AZ, BA, BB, BG, BH, BN, BR, BW, BY, BZ, CA, CH, CL, CN, CO, CR, CU, CZ, DE, DJ, DK, DM, DO, DZ, EC, EE, EG, ES, FI, GB, GD, GE, GH, GM, GT, HN, HR, HU, ID, IL, IN, IR, IS, JO, JP, KE, KG, KH, KN, KP, KR, KW, KZ, LA, LC, LK, LR, LS, LU, LY, MA, MD, ME, MG, MK, MN, MW, MX, MY, MZ, NA, NG, NI, NO, NZ, OM, PA, PE, PG, PH, PL, PT, QA, RO, RS, RU, RW, SA, SC, SD, SE, SG, SK, SL, SM, ST, SV, SY, TH, TJ, TM, TN, TR, TT, TZ, UA, UG, US, UZ, VC, VN, ZA, ZM, ZW.

(84) Designated States *(unless otherwise indicated, for every kind of regional protection available)*: ARIPO (BW, GH, GM, KE, LR, LS, MW, MZ, NA, RW, SD, SL, ST, SZ, TZ,

(54) Title: SAMPLE ROD GROWTH AND RESISTIVITY MEASUREMENT DURING SINGLE CRYSTAL SILICON INGOT PRODUCTION

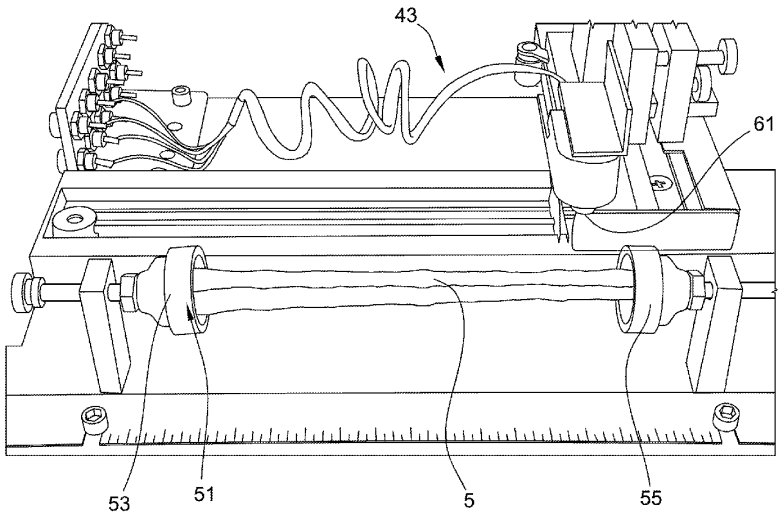


FIG. 4

(57) Abstract: Methods for forming single crystal silicon ingots with improved resistivity control. The methods involve growth and resistivity measurement of a sample rod. The sample rod may have a diameter less than the diameter of the product ingot. The resistivity of the sample rod may be measured directly by contacting a resistivity probe with a planar segment formed on the sample rod. The sample rod may be annealed in a thermal donor kill cycle prior to measuring the resistivity.

[Continued on next page]

WO 2020/005901 A1

UG, ZM, ZW), Eurasian (AM, AZ, BY, KG, KZ, RU, TJ, TM), European (AL, AT, BE, BG, CH, CY, CZ, DE, DK, EE, ES, FI, FR, GB, GR, HR, HU, IE, IS, IT, LT, LU, LV, MC, MK, MT, NL, NO, PL, PT, RO, RS, SE, SI, SK, SM, TR), OAPI (BF, BJ, CF, CG, CI, CM, GA, GN, GQ, GW, KM, ML, MR, NE, SN, TD, TG).

**Published:**

— *with international search report (Art. 21(3))*