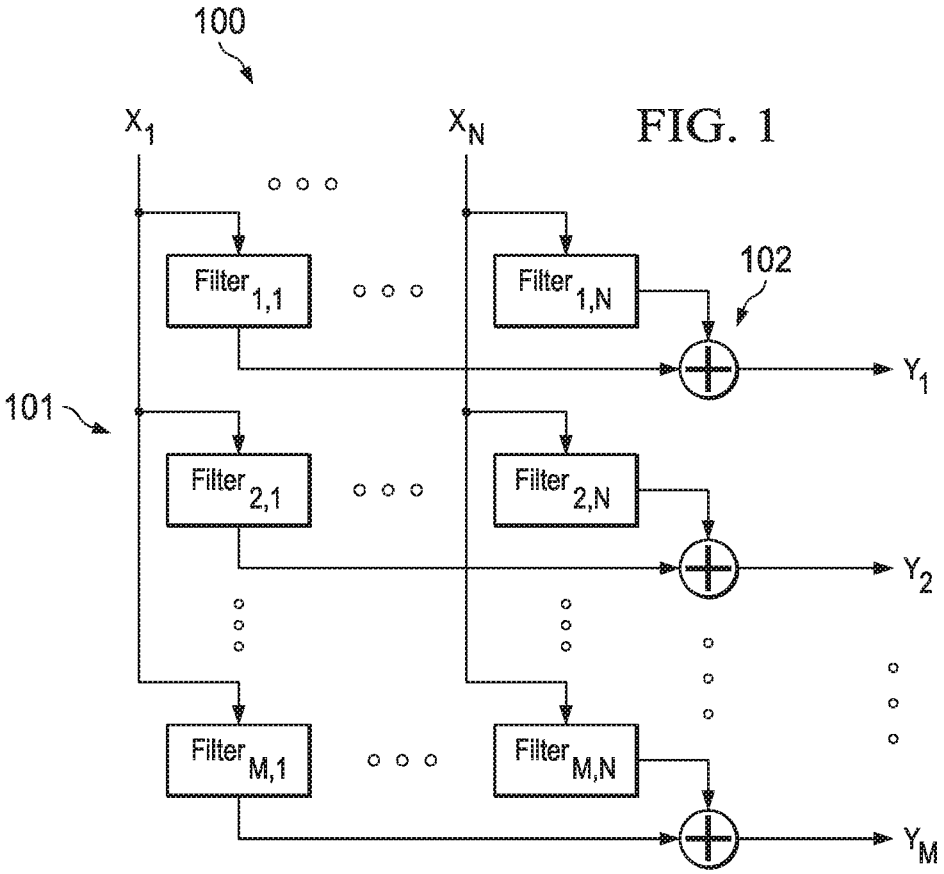
100
X1
XN
Filter1,1
Filter1,N
102
Y1
101
Filter2,1
Filter2,N
Y2
FilterM,1
FilterM,N
YM

FIG. 1

FIG. 2

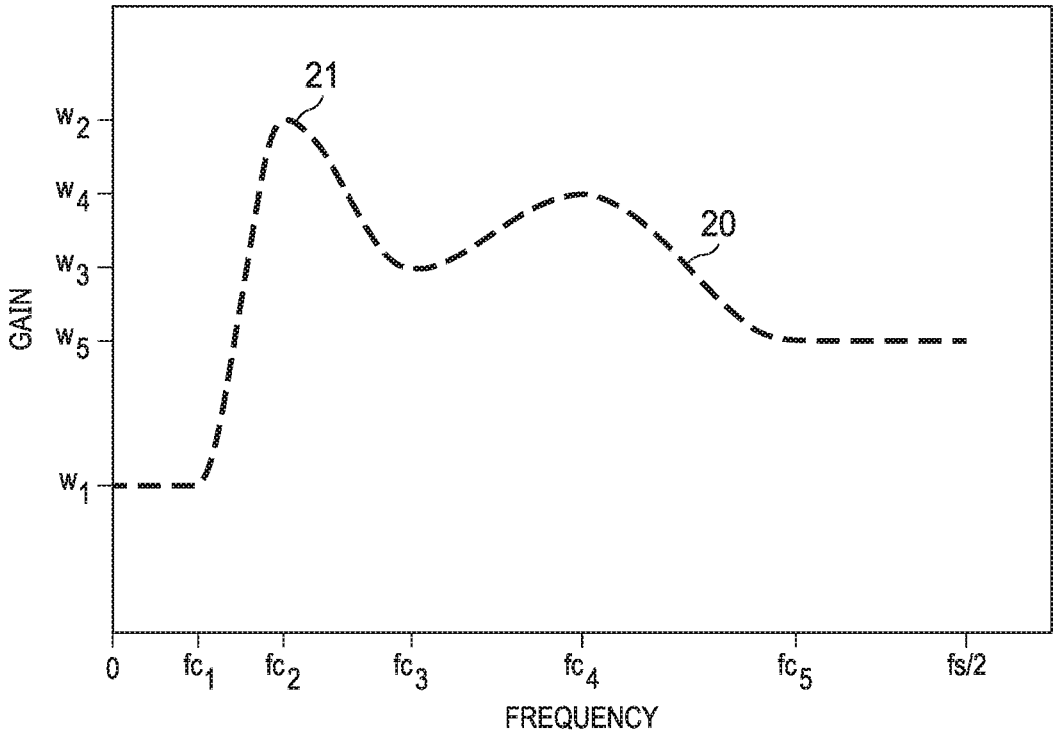
21
20
w2
w4
w3
w5
w1
GAIN
0
fc1
fc2
fc3
fc4
fc5
fs/2
FREQUENCY

FIG. 3

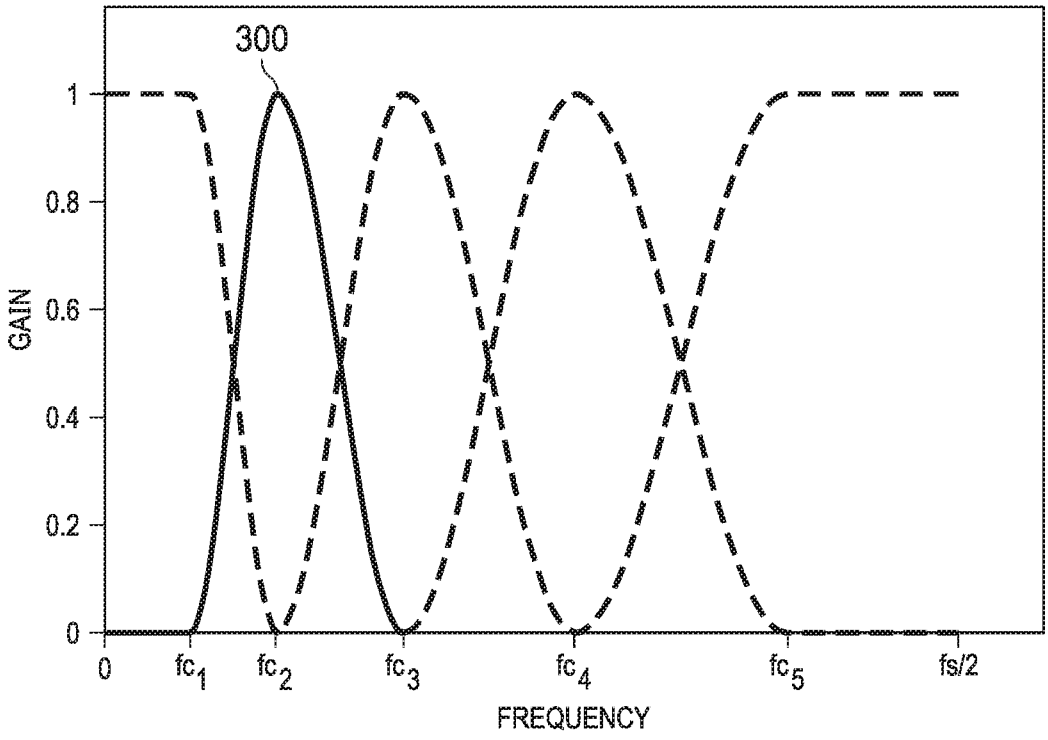
300
1
0.8
0.6
0.4
0.2
0
GAIN
0
fc1
fc2
fc3
fc4
fc5
fs/2
FREQUENCY

FIG. 4

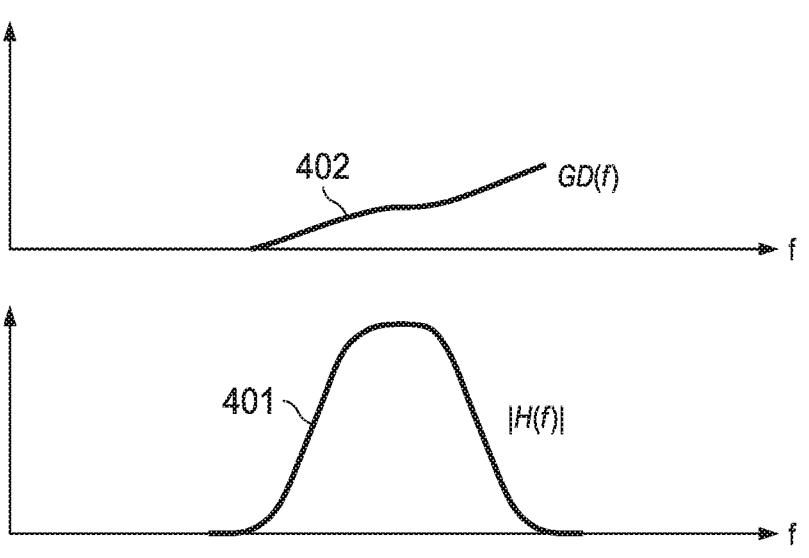
402
GD(f)
f
401
|H(f)|
f

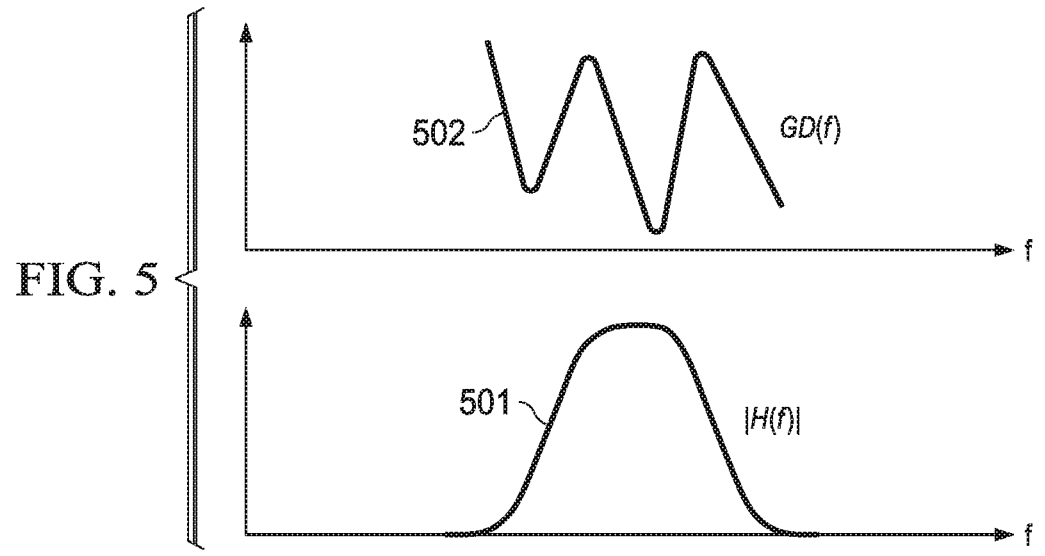
502
GD(f)
f
501
|H(f)|
f

FIG. 5

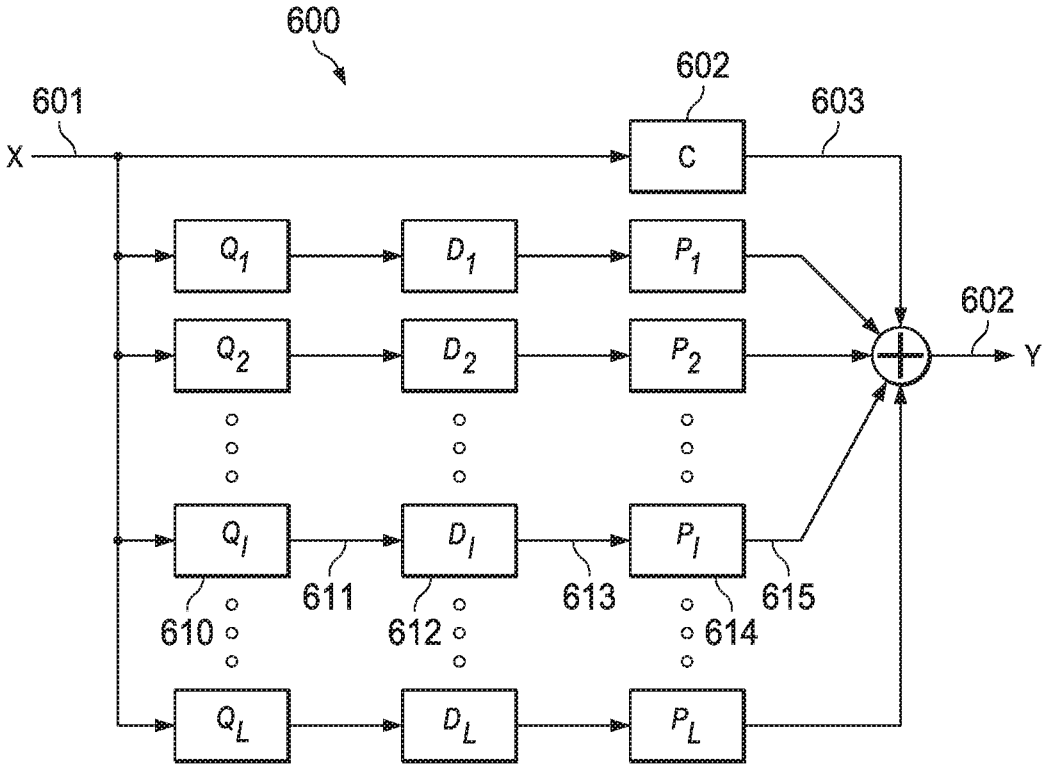
600
601
X
602
C
603
Q_1
D_1
P_1
602
Q_2
D_2
P_2
Y
Q_l
D_l
P_l
610
611
612
613
614
615
Q_L
D_L
P_L

FIG. 6

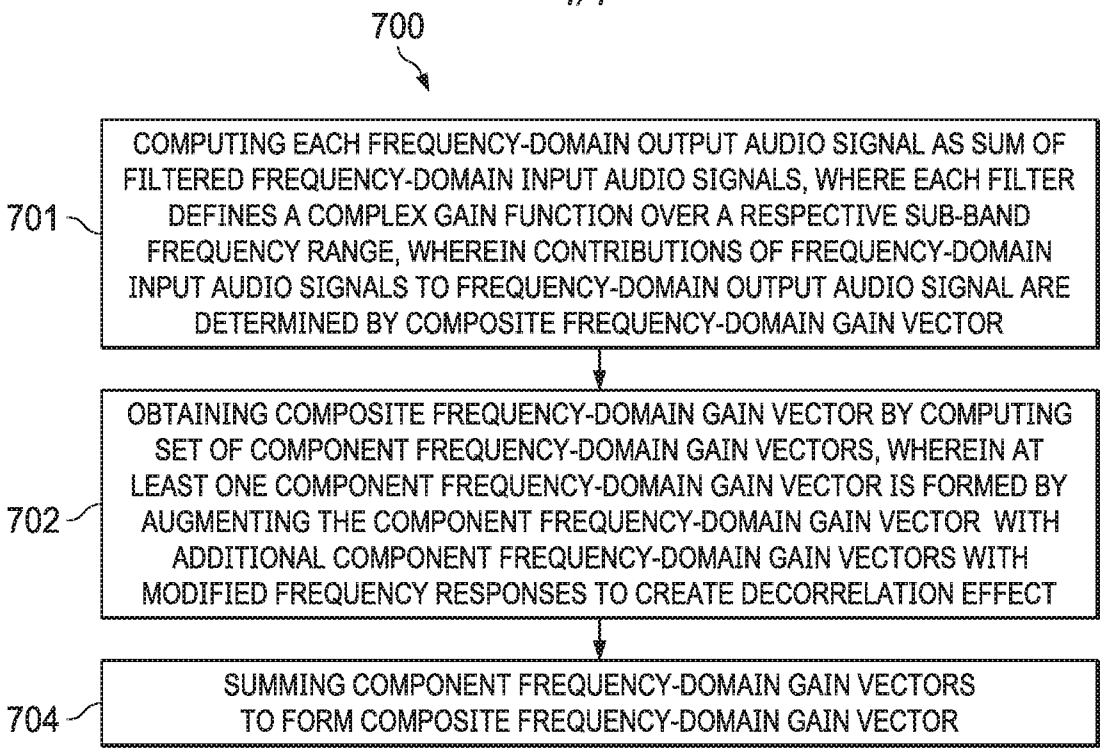
700
COMPUTING EACH FREQUENCY-DOMAIN OUTPUT AUDIO SIGNAL AS SUM OF FILTERED FREQUENCY-DOMAIN INPUT AUDIO SIGNALS, WHERE EACH FILTER DEFINES A COMPLEX GAIN FUNCTION OVER A RESPECTIVE SUB-BAND FREQUENCY RANGE, WHEREIN CONTRIBUTIONS OF FREQUENCY-DOMAIN INPUT AUDIO SIGNALS TO FREQUENCY-DOMAIN OUTPUT AUDIO SIGNAL ARE DETERMINED BY COMPOSITE FREQUENCY-DOMAIN GAIN VECTOR
701
OBTAINING COMPOSITE FREQUENCY-DOMAIN GAIN VECTOR BY COMPUTING SET OF COMPONENT FREQUENCY-DOMAIN GAIN VECTORS, WHEREIN AT LEAST ONE COMPONENT FREQUENCY-DOMAIN GAIN VECTOR IS FORMED BY AUGMENTING THE COMPONENT FREQUENCY-DOMAIN GAIN VECTOR WITH ADDITIONAL COMPONENT FREQUENCY-DOMAIN GAIN VECTORS WITH MODIFIED FREQUENCY RESPONSES TO CREATE DECORRELATION EFFECT
702
SUMMING COMPONENT FREQUENCY-DOMAIN GAIN VECTORS TO FORM COMPOSITE FREQUENCY-DOMAIN GAIN VECTOR
704

FIG. 7

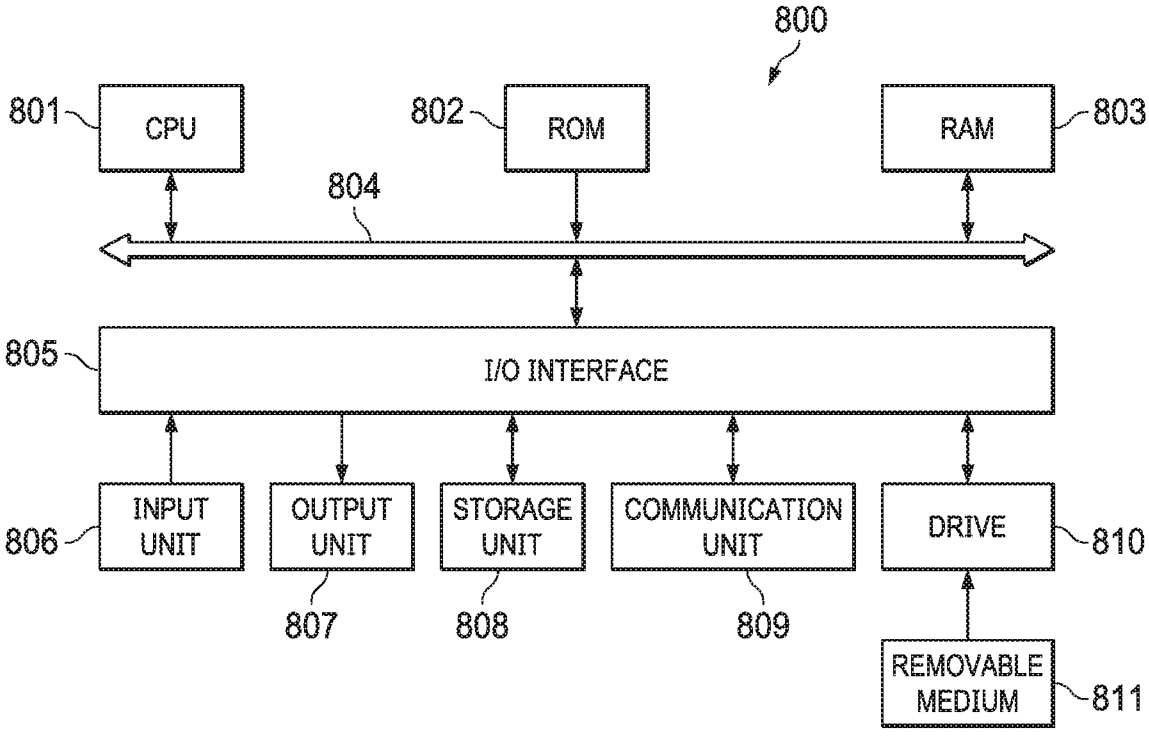
800
801
CPU
802
ROM
803
RAM
804
805
I/O INTERFACE
806
INPUT UNIT
OUTPUT UNIT
807
STORAGE UNIT
808
COMMUNICATION UNIT
809
DRIVE
810
REMOVABLE MEDIUM
811

FIG. 8