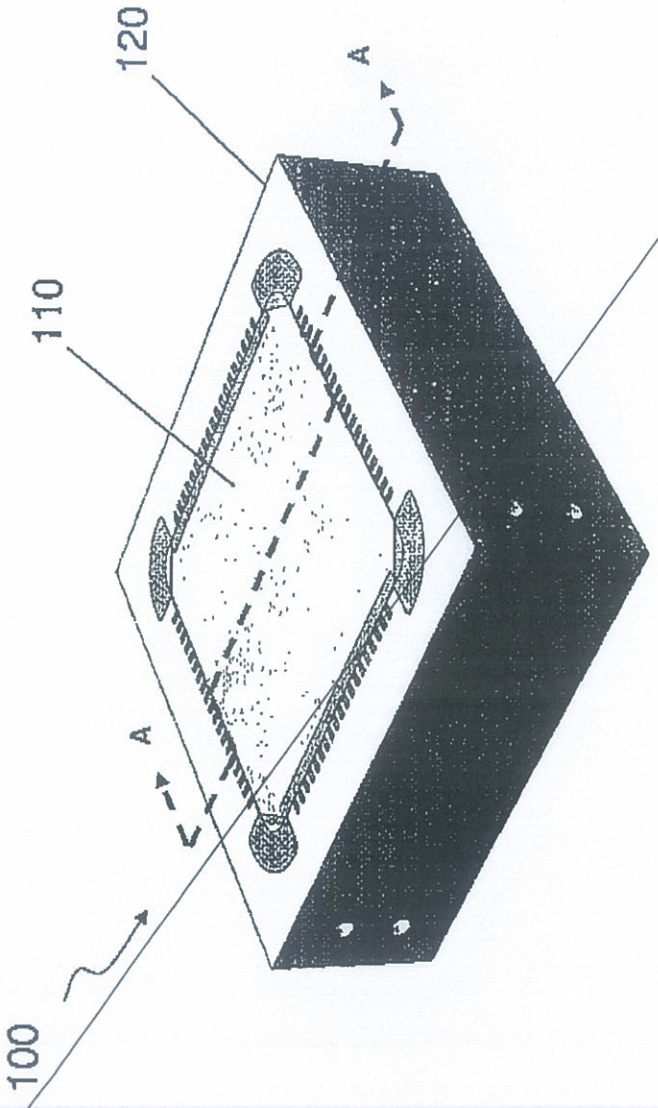

FIG. 1

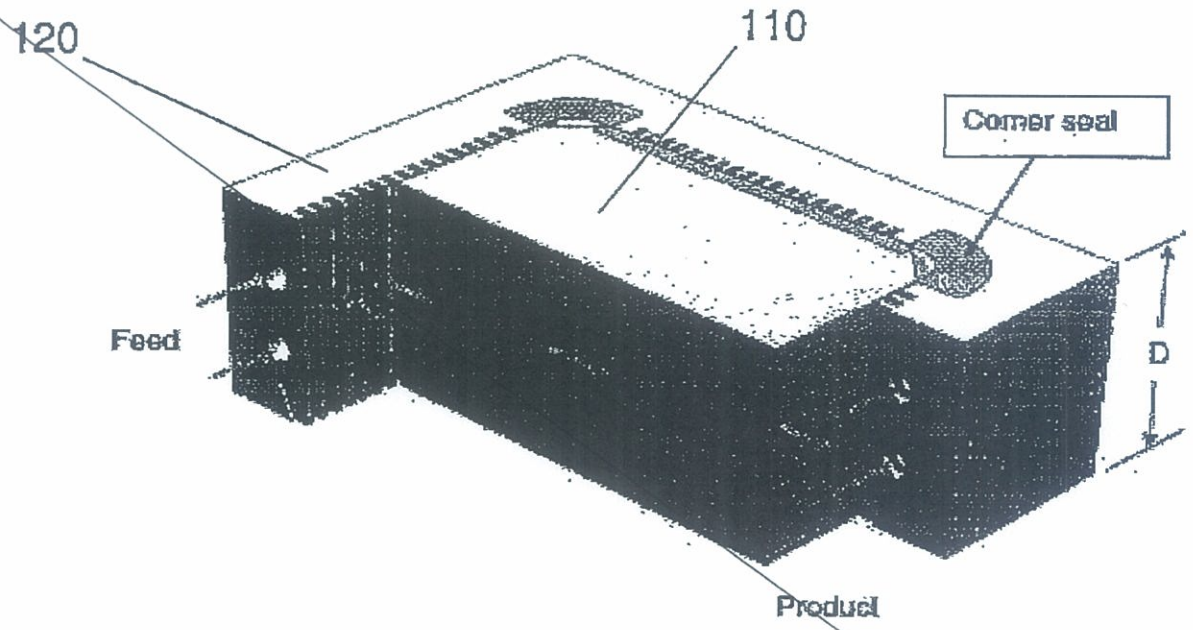

FIG. 2

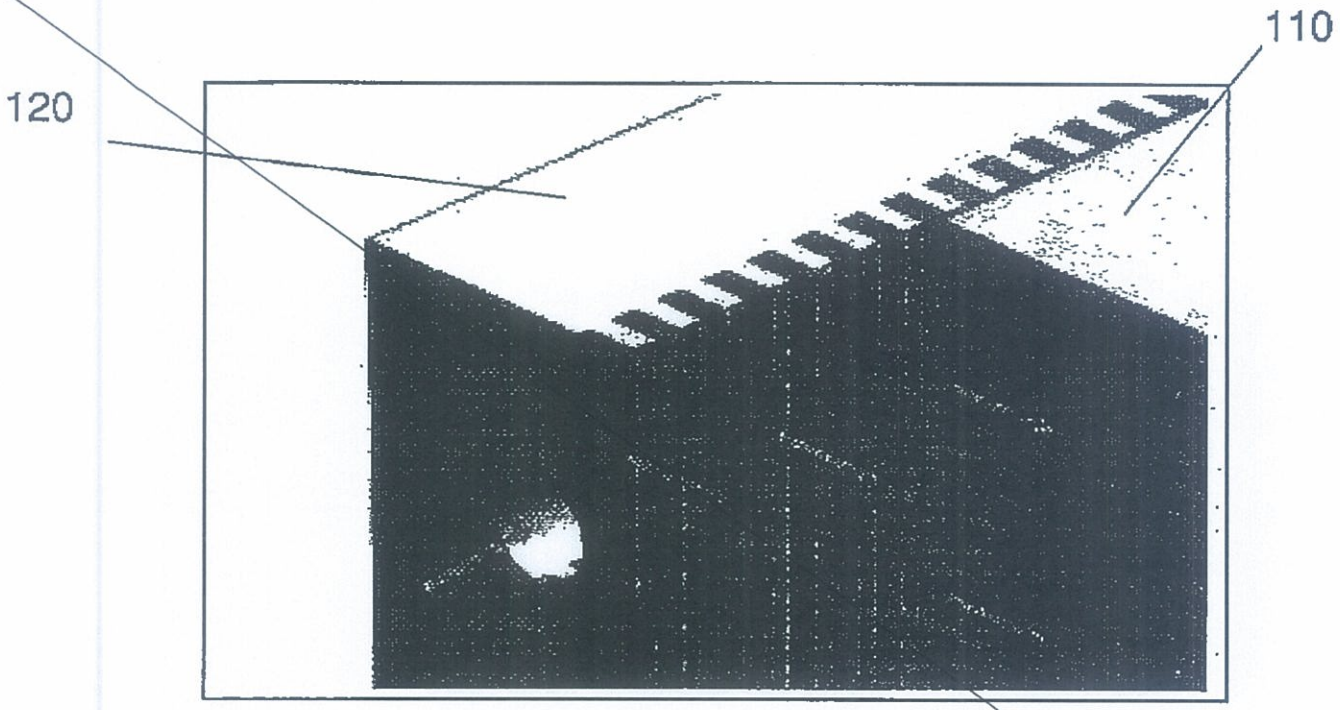

FIG. 3

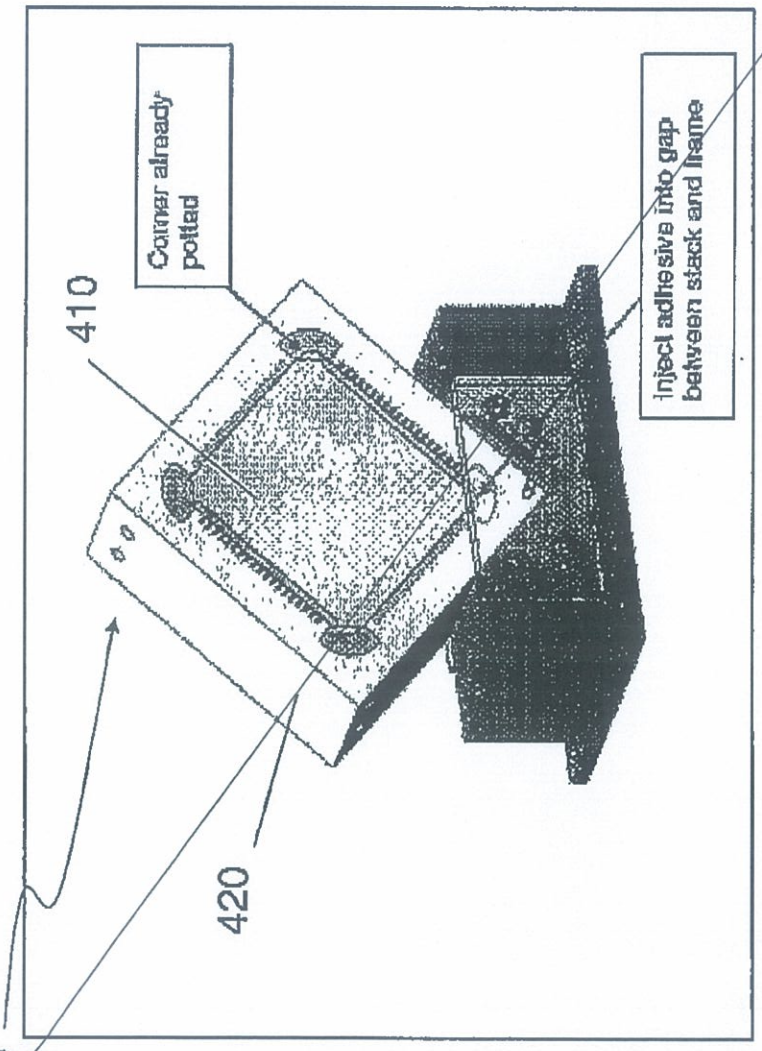
Corner already potted
410
420
400
Inject adhesive into gap between stack and frame

FIG. 4

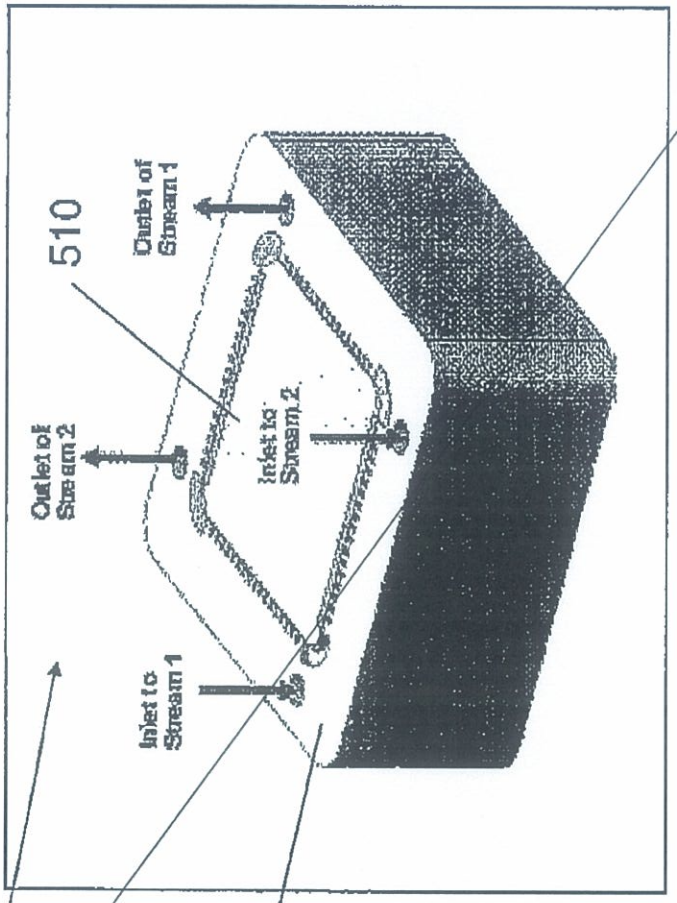
500
510
520
Outlet of Stream 1
Outlet of Stream 2
Inlet to Stream 2
Inlet to Stream 1

FIG. 5

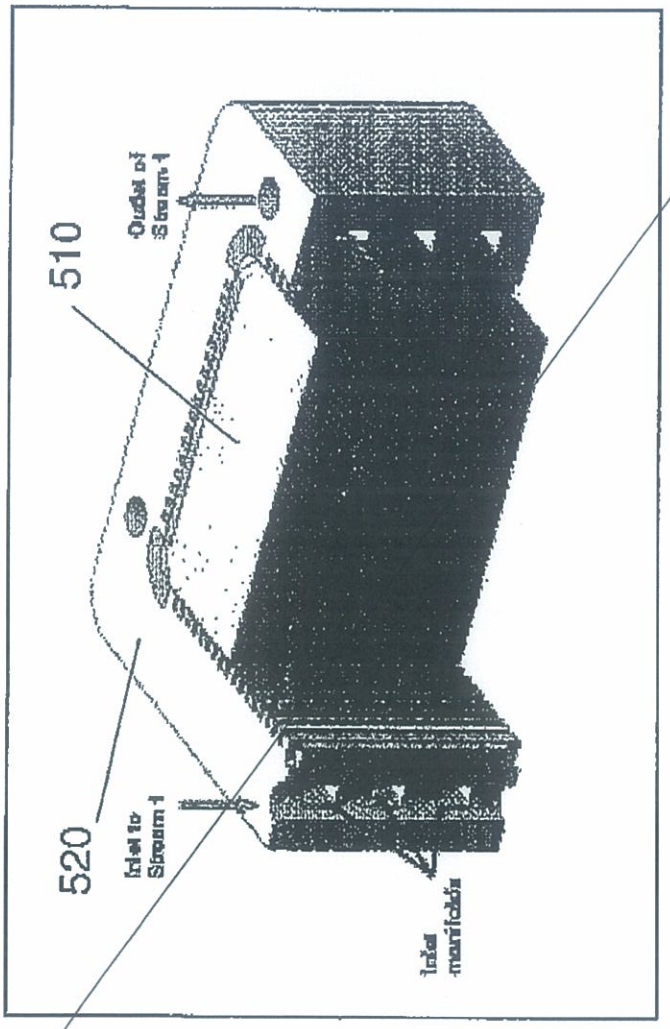

FIG. 6

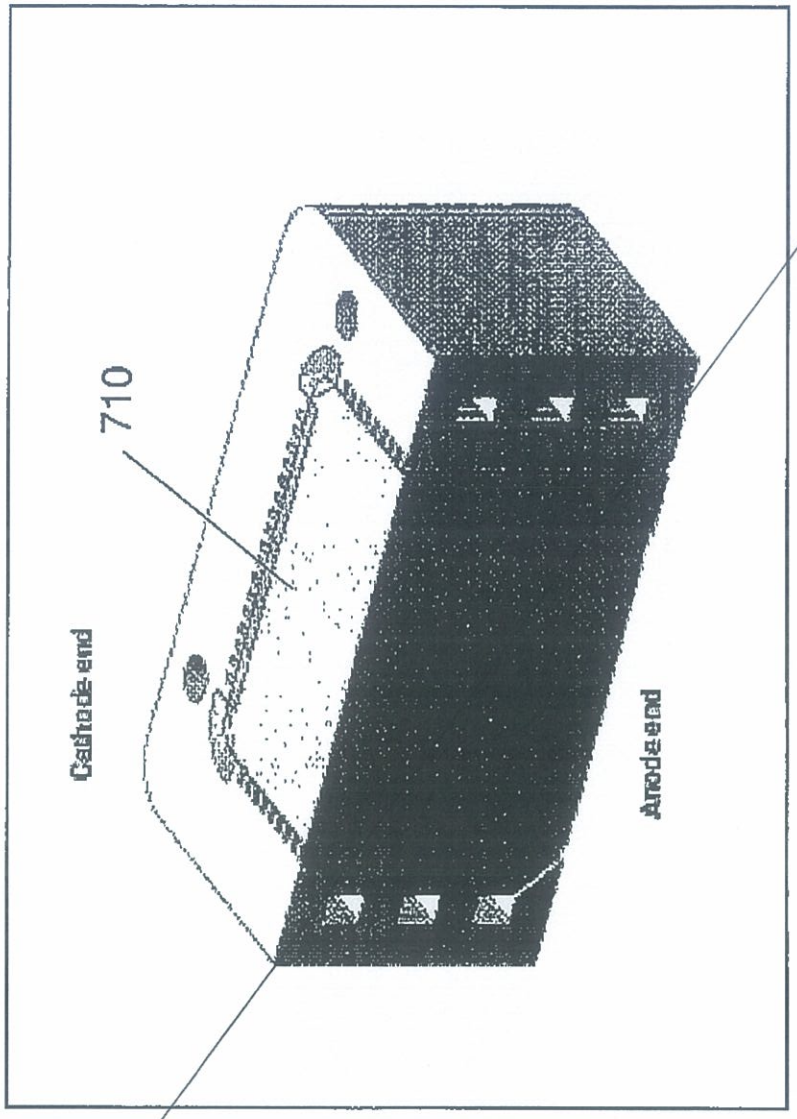

FIG. 7

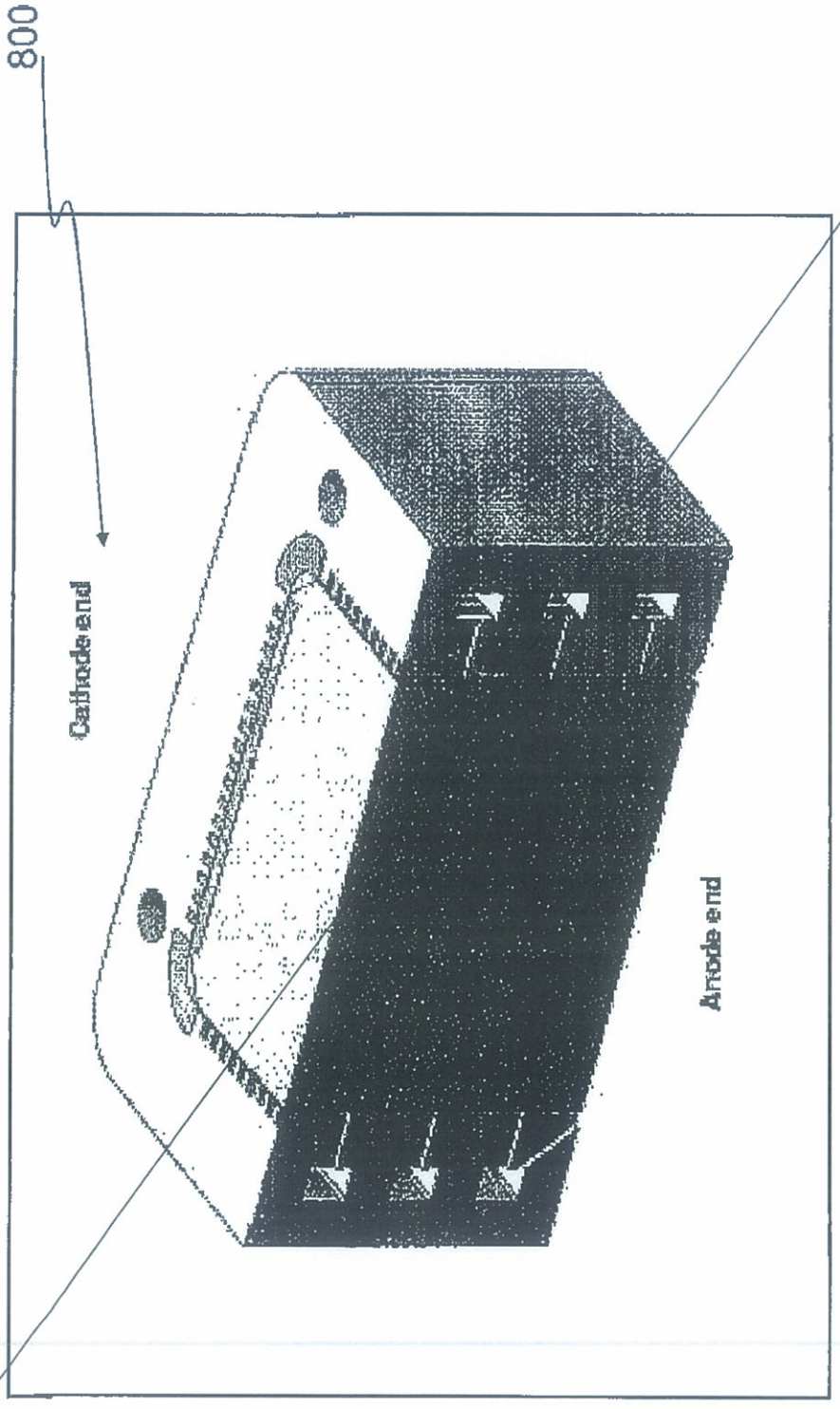

FIG. 8

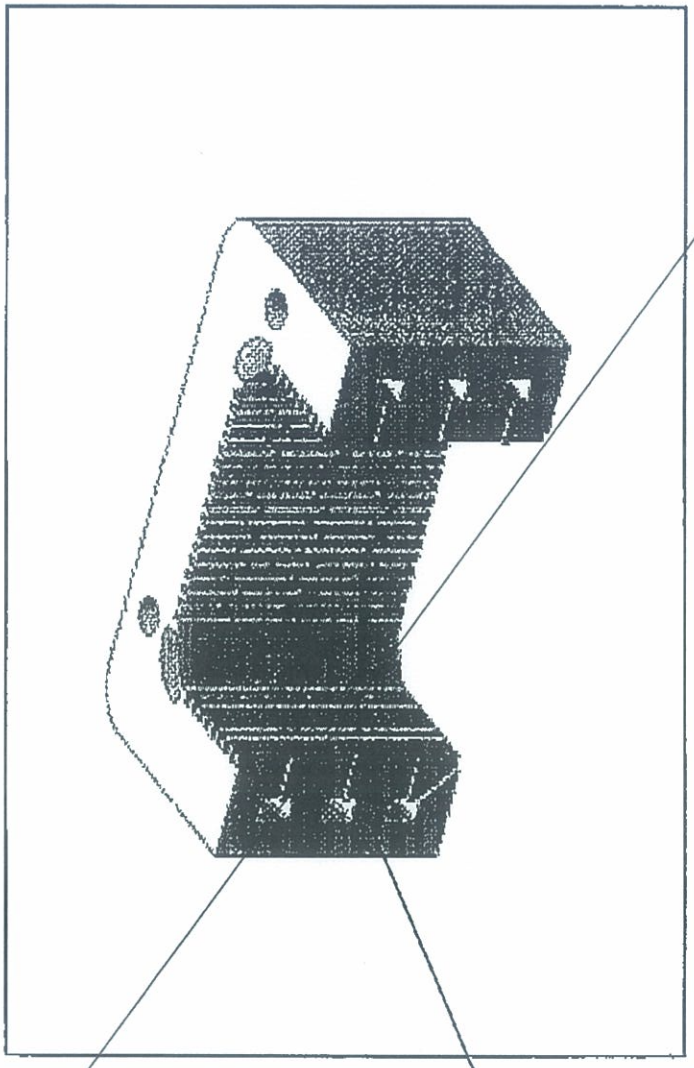

FIG. 9

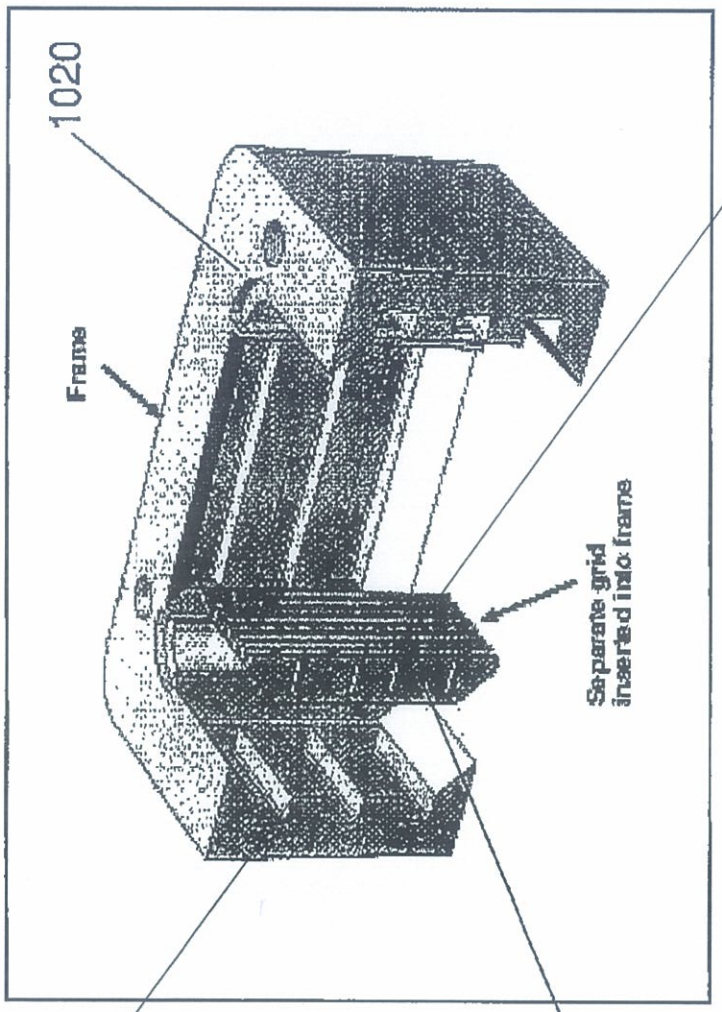

FIG. 10

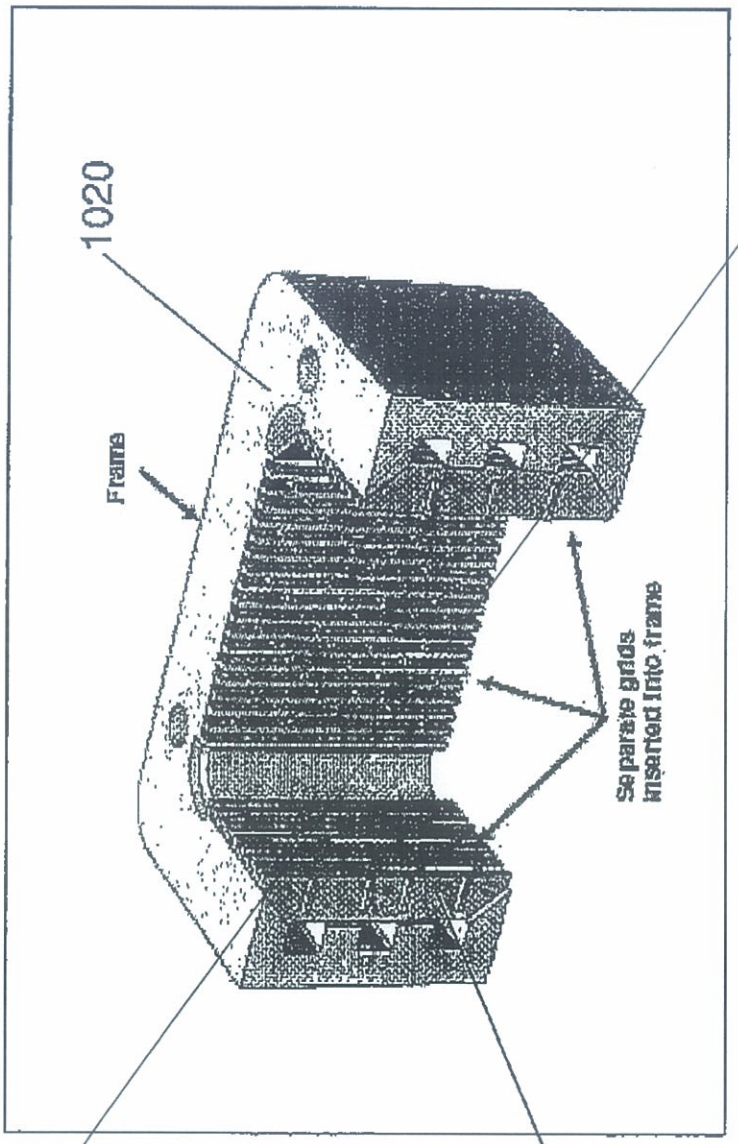

FIG. 11

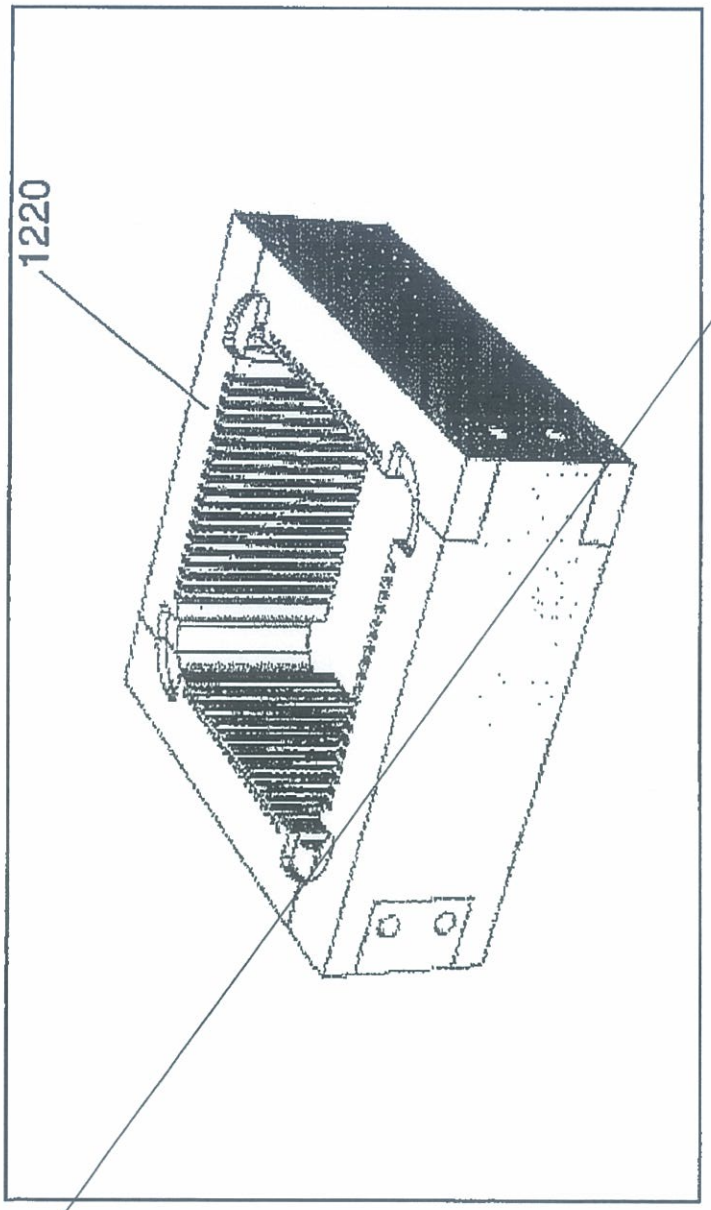

FIG. 12

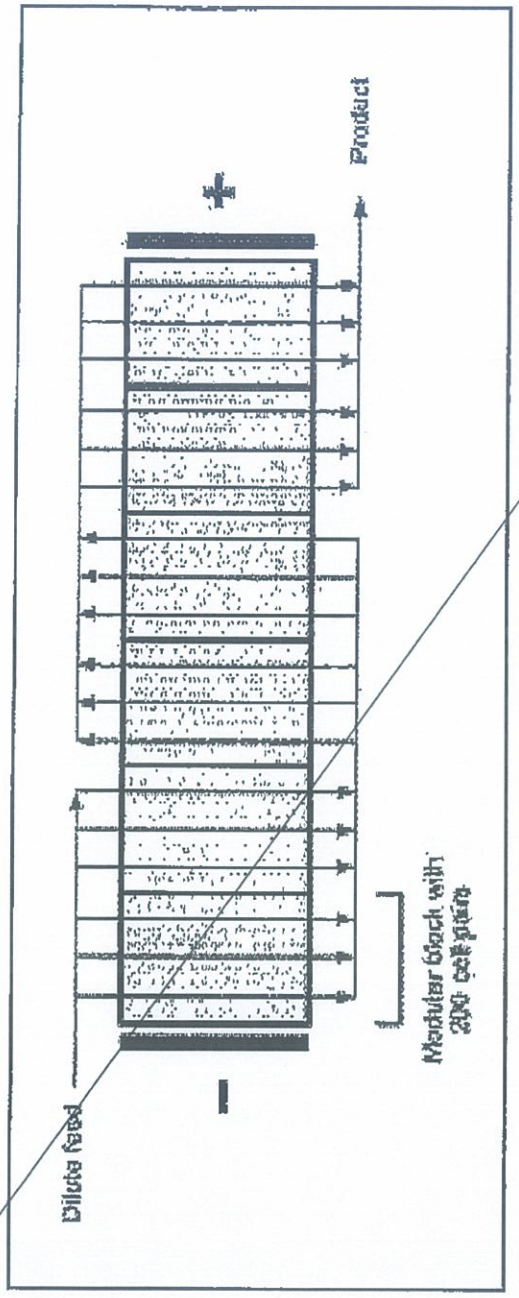

FIG. 13

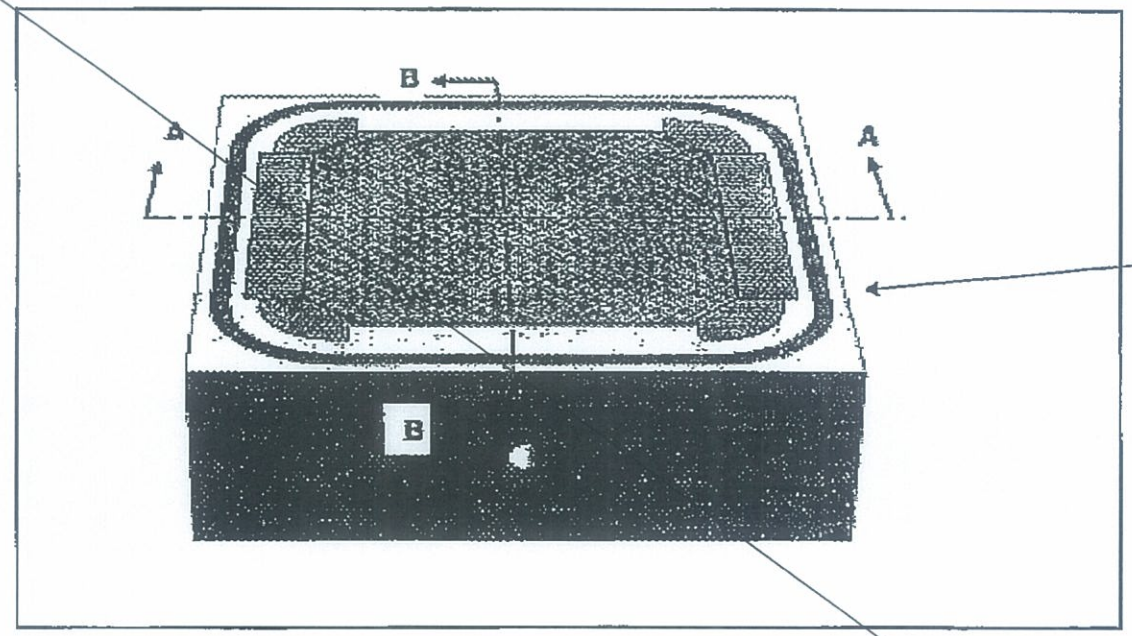

FIG. 14

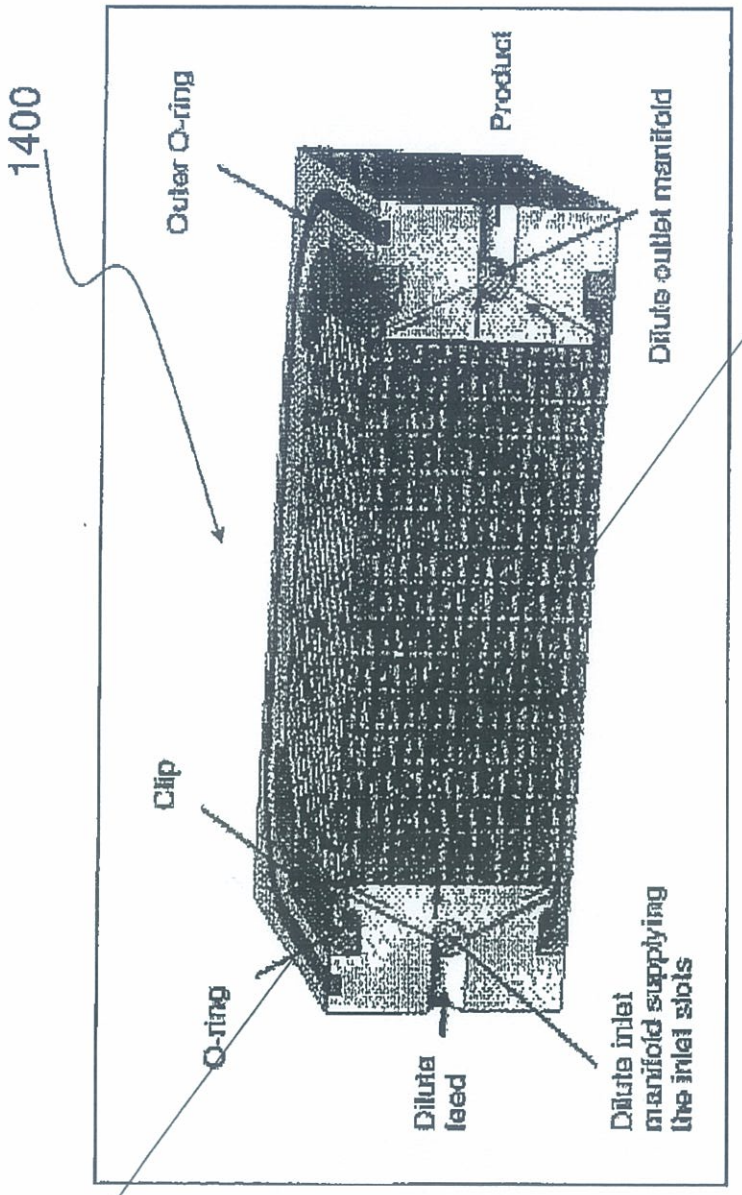
1400
Outer O-ring
Product
Dilute outlet manifold
Clip
O-ring
Dilute feed
Dilute inlet manifold supplying the inlet slots

FIG. 15

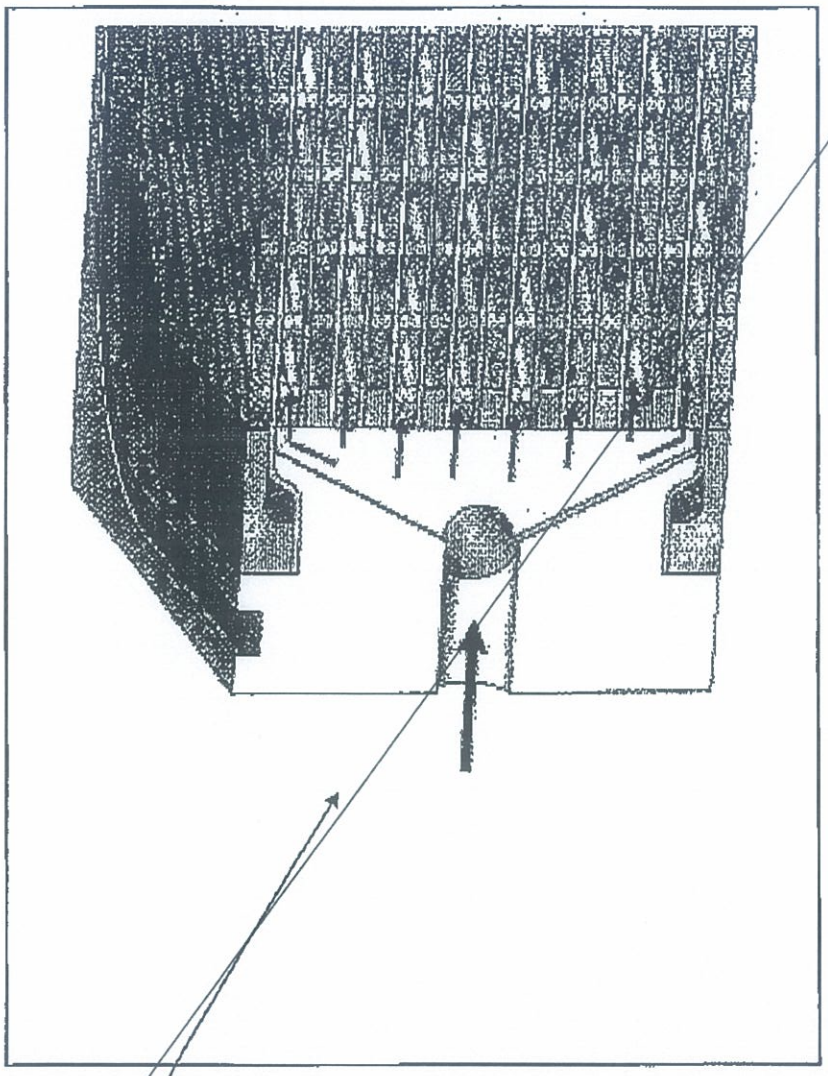

1400

FIG. 16

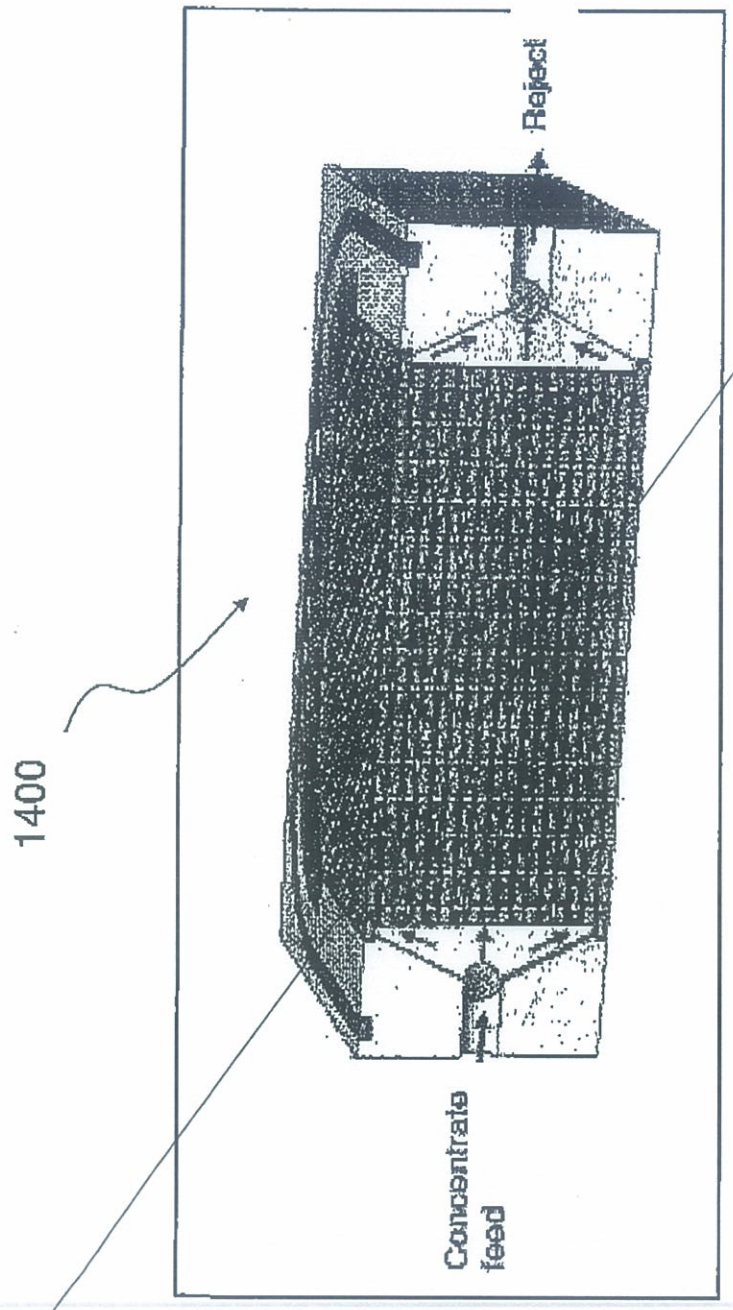

FIG. 17

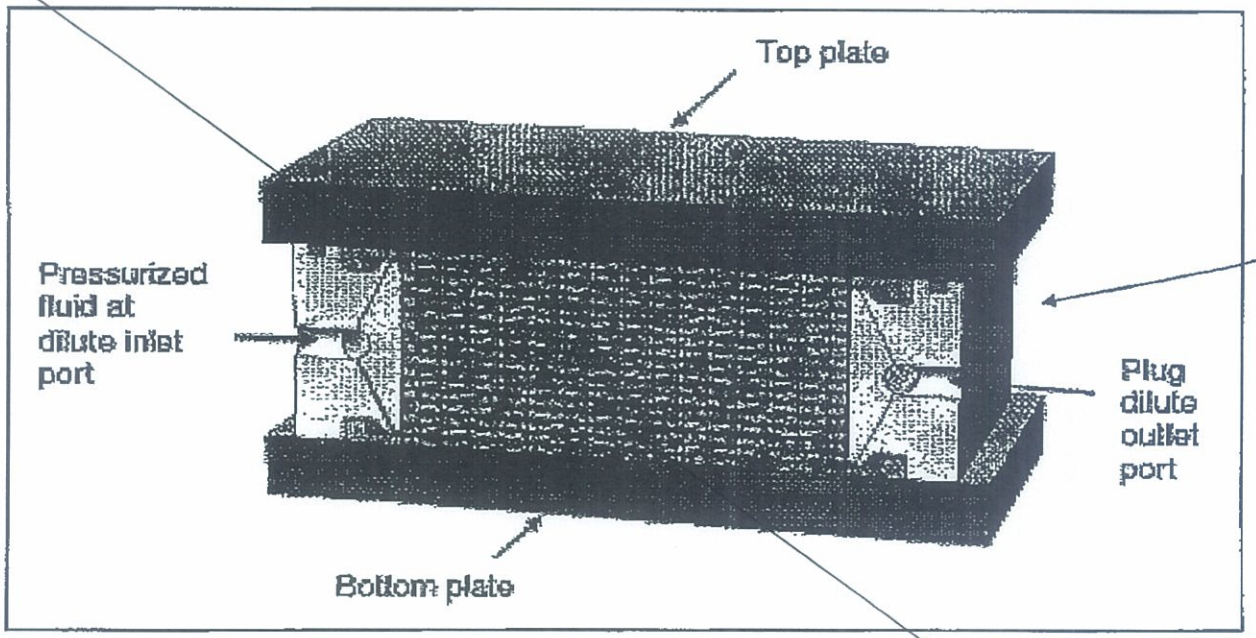
Top plate
1800
Pressurized fluid at dilute inlet port
Plug dilute outlet port
Bottom plate

FIG. 18

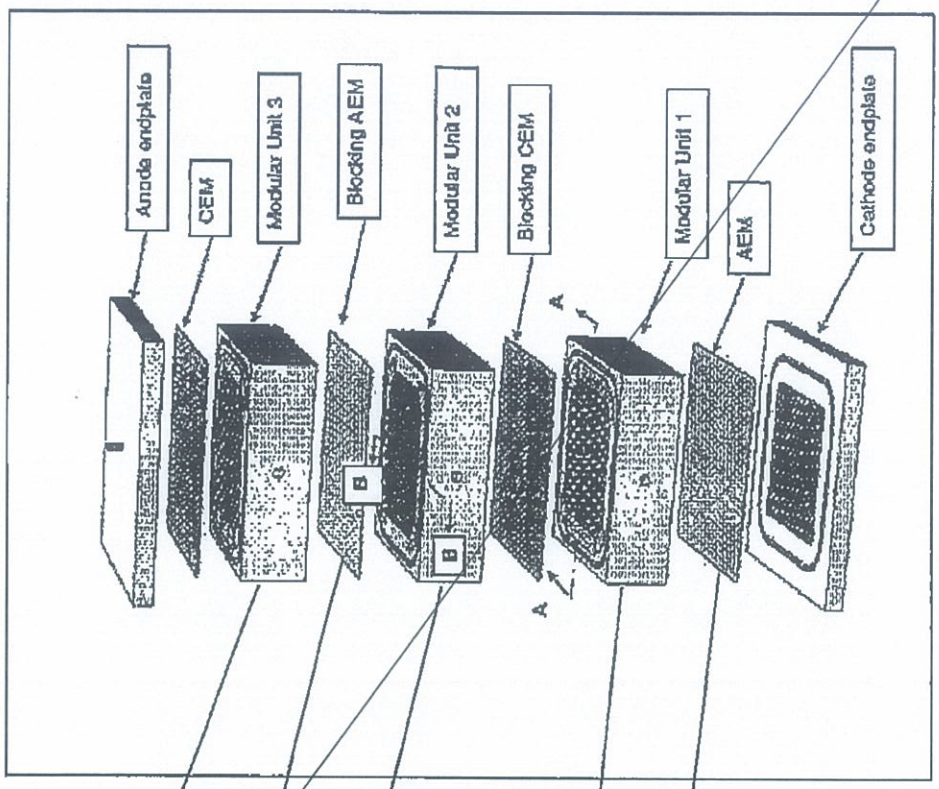
Anode endplate
CEM
Modular Unit 3
Blocking AEM
Modular Unit 2
Blocking CEM
Modular Unit 1
AEM
Cathode endplate
A
A
B
B
1900
1970
1900
1900
1970

FIG. 19

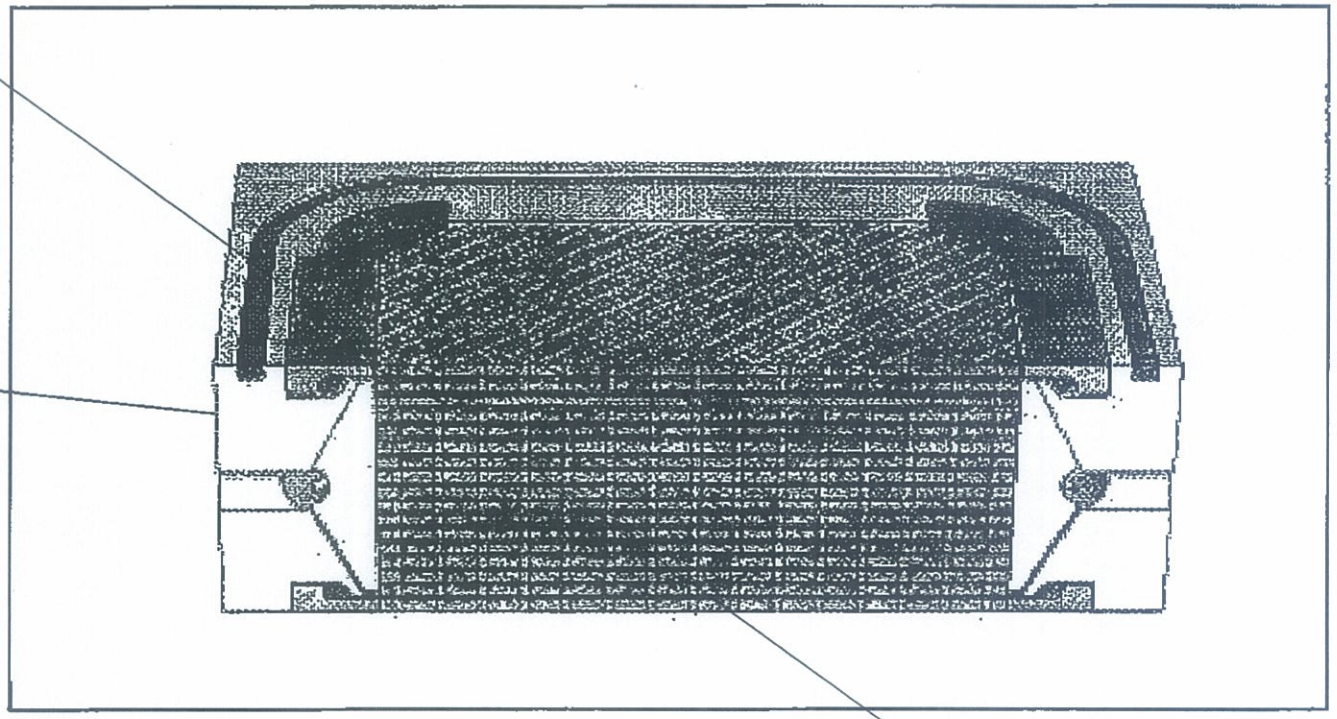

FIG. 20

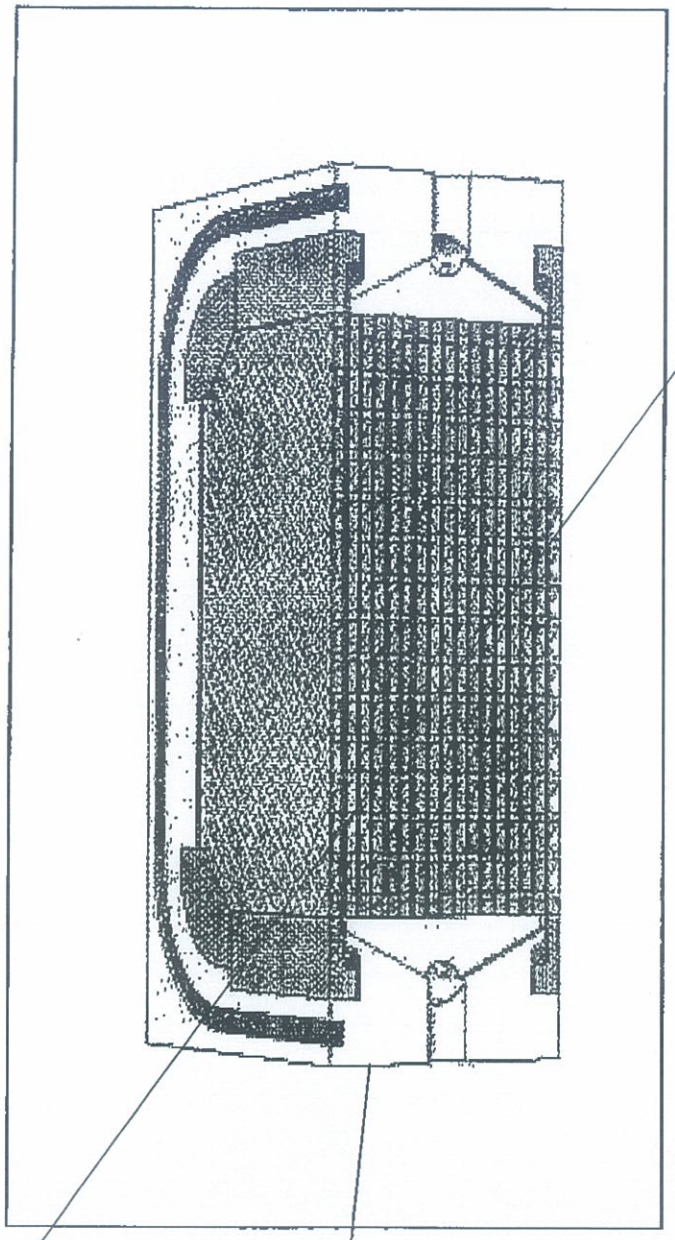

FIG. 21

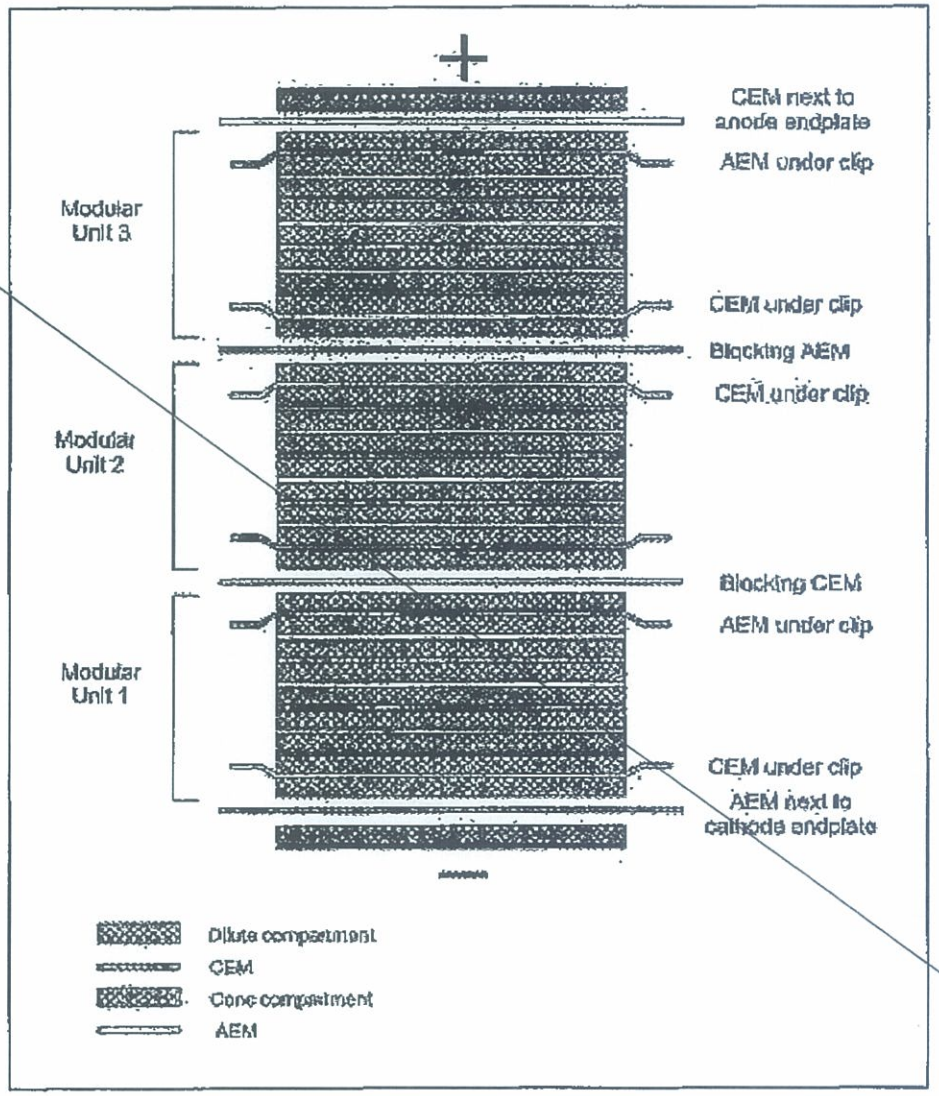
+
CEM next to anode endplate
AEM under clip
Modular Unit 3
CEM under clip
Blocking AEM
CEM under clip
Modular Unit 2
Blocking CEM
AEM under clip
Modular Unit 1
CEM under clip
AEM next to cathode endplate
Dilute compartment
CEM
Conc compartment
AEM

FIG. 22

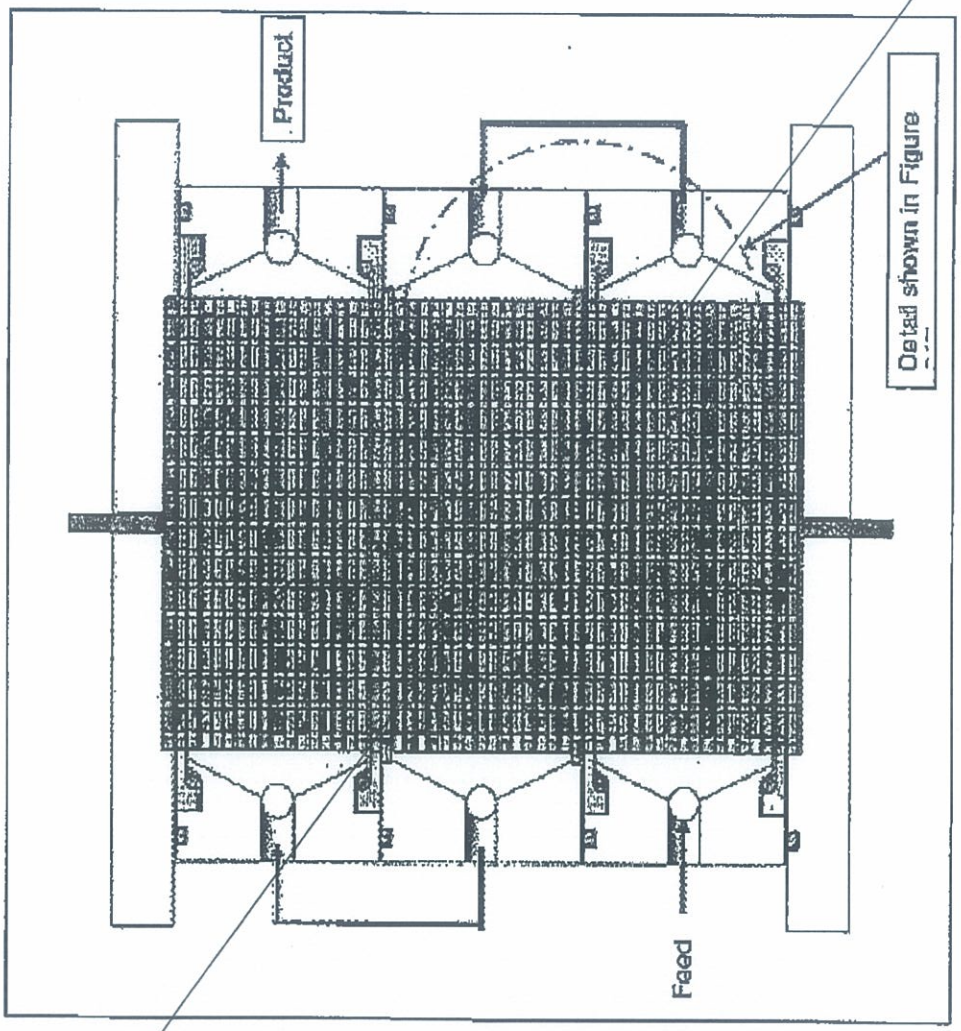

FIG. 23

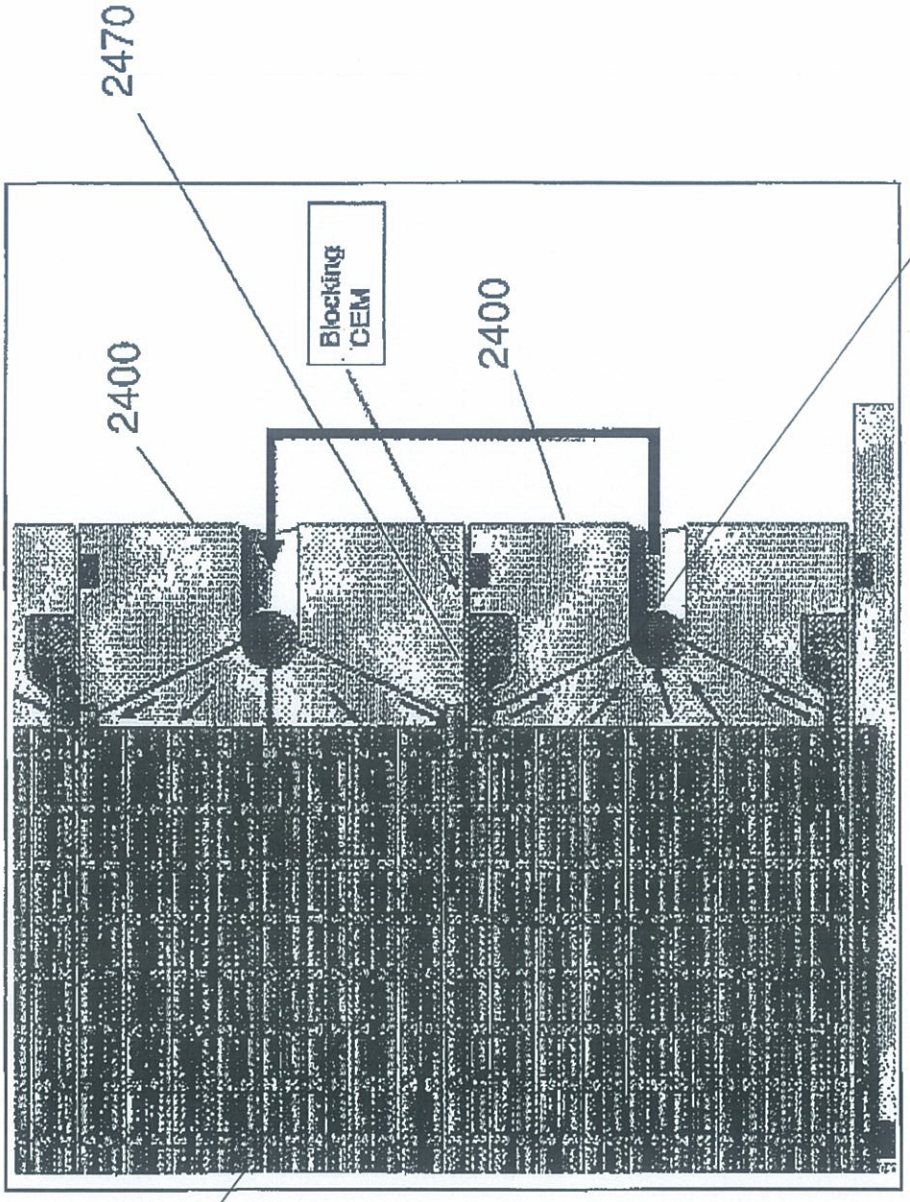

FIG. 24

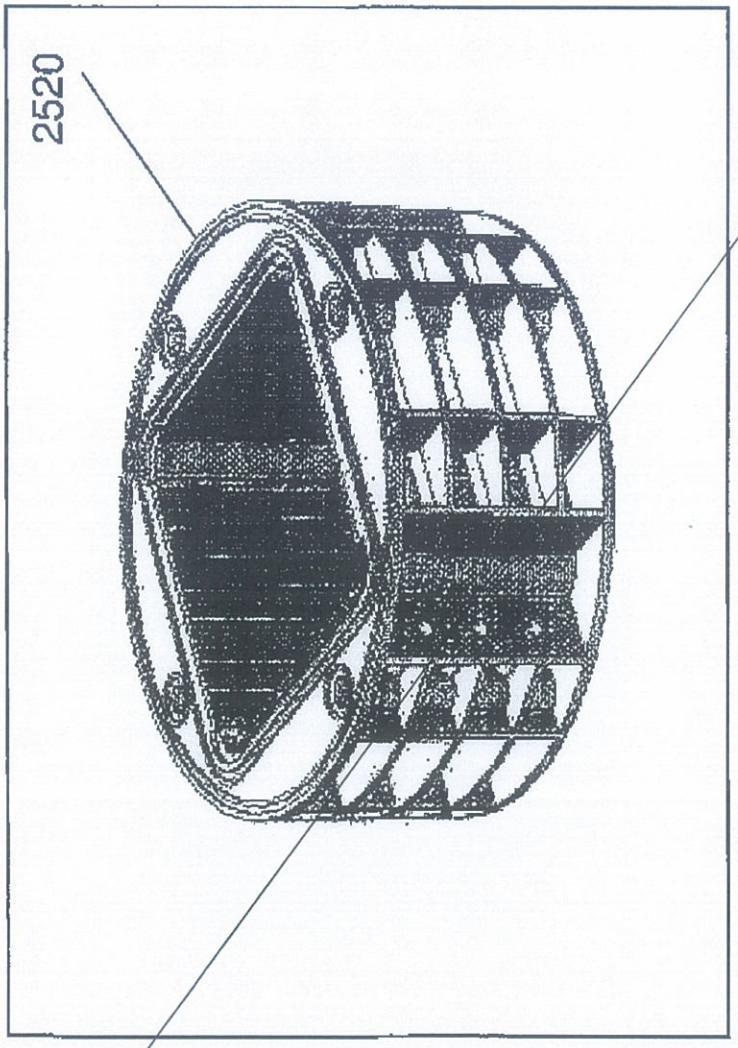

FIG. 25

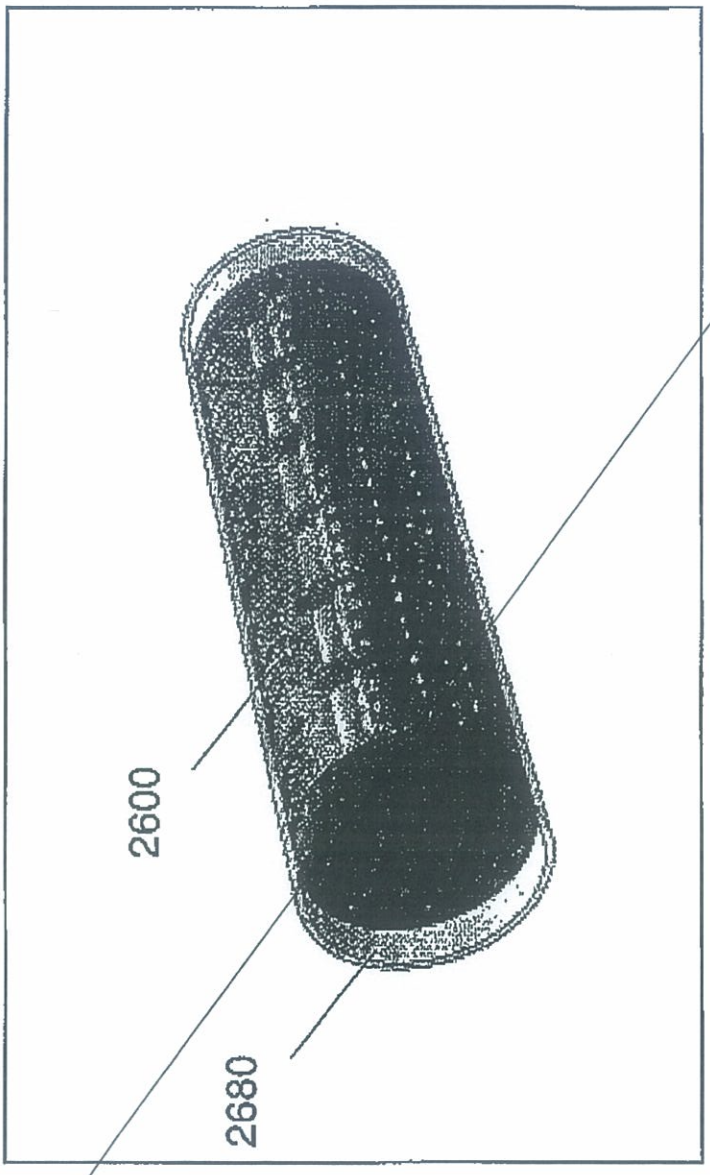

FIG. 26F



FIG. 27

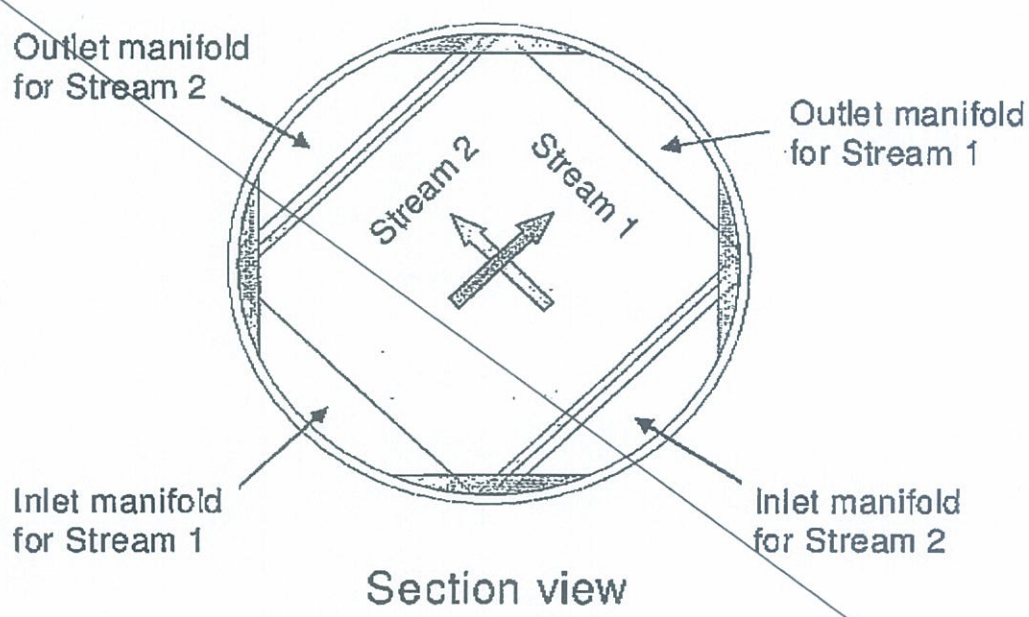
Outlet manifold
for Stream 2
Outlet manifold
for Stream 1
Stream 2
Stream 1
Inlet manifold
for Stream 1
Inlet manifold
for Stream 2
Section view

FIG. 28

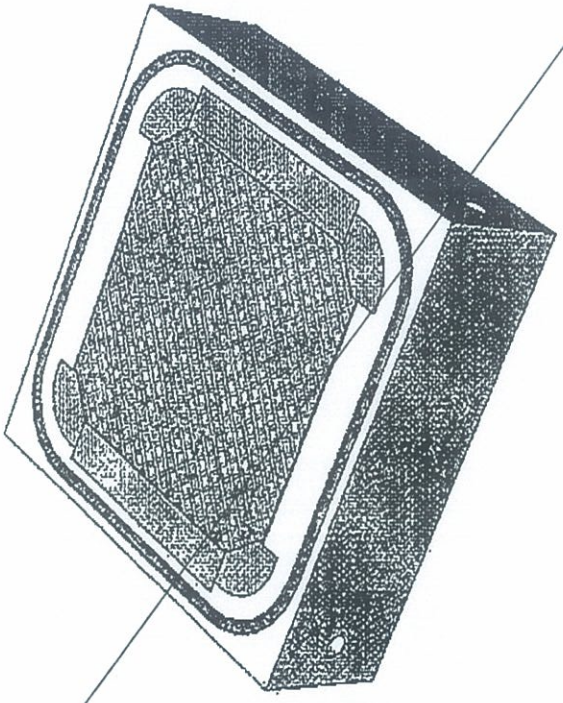

FIG. 29

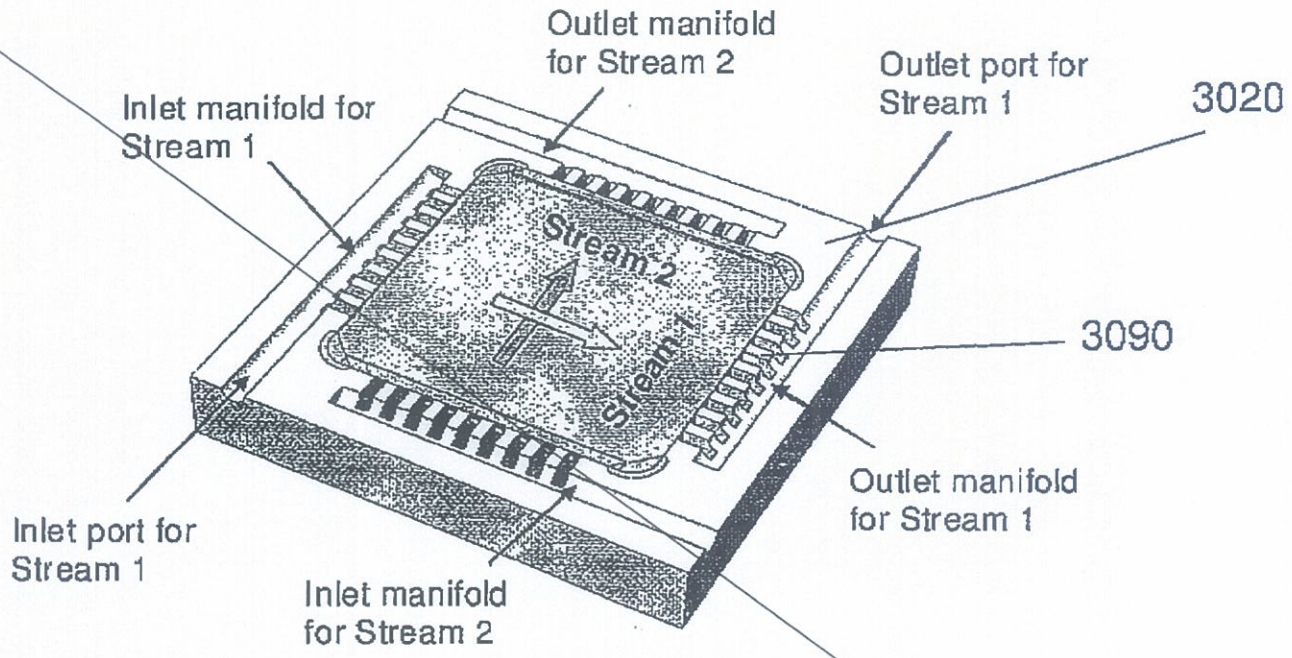
Outlet manifold
for Stream 2
Outlet port for
Stream 1
3020
Inlet manifold for
Stream 1
Stream 2
Stream 1
3090
Outlet manifold
for Stream 1
Inlet port for
Stream 1
Inlet manifold
for Stream 2
Section view

FIG. 30

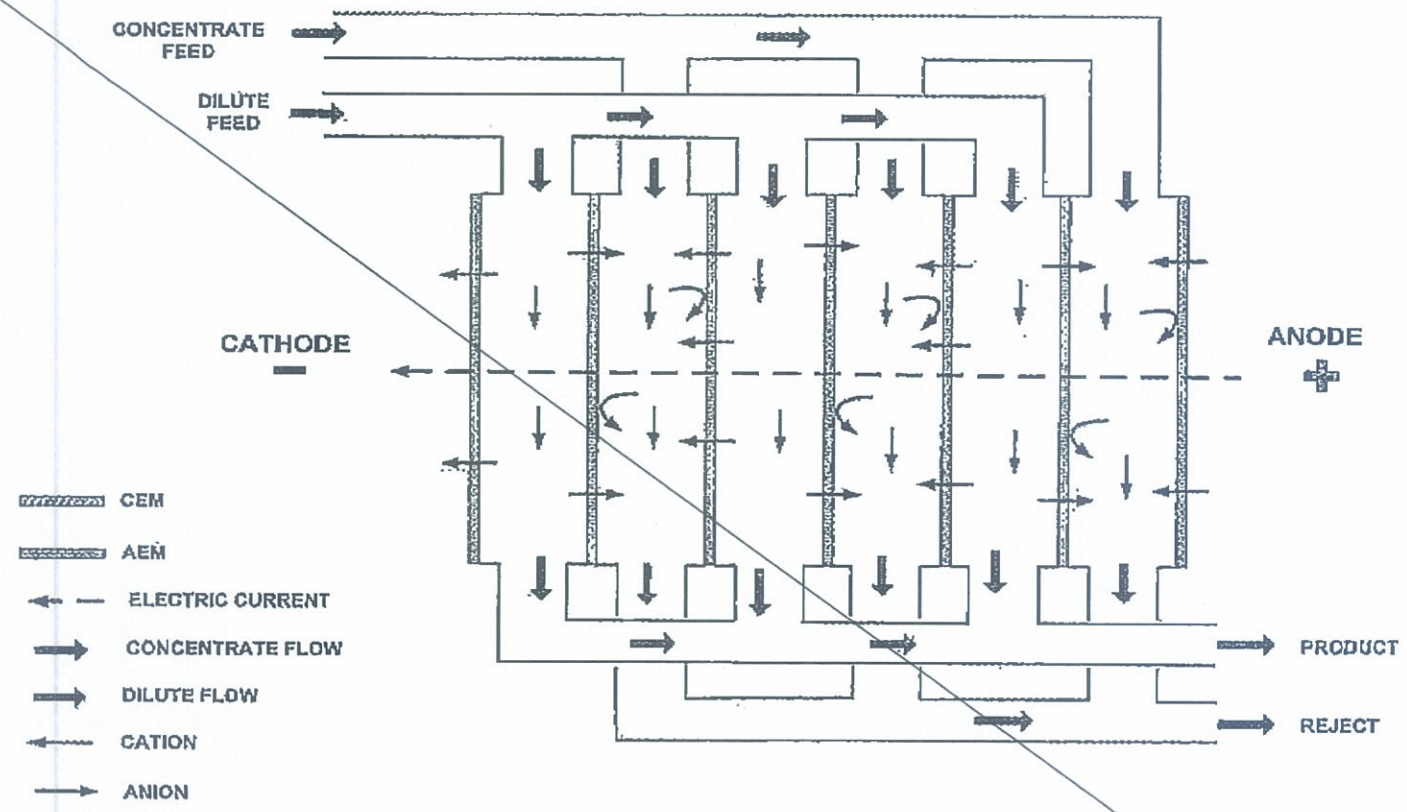
CONCENTRATE FEED
DILUTE FEED
CATHODE
ANODE
PRODUCT
REJECT
CEM
AEM
ELECTRIC CURRENT
CONCENTRATE FLOW
DILUTE FLOW
CATION
ANION

FIG. 31

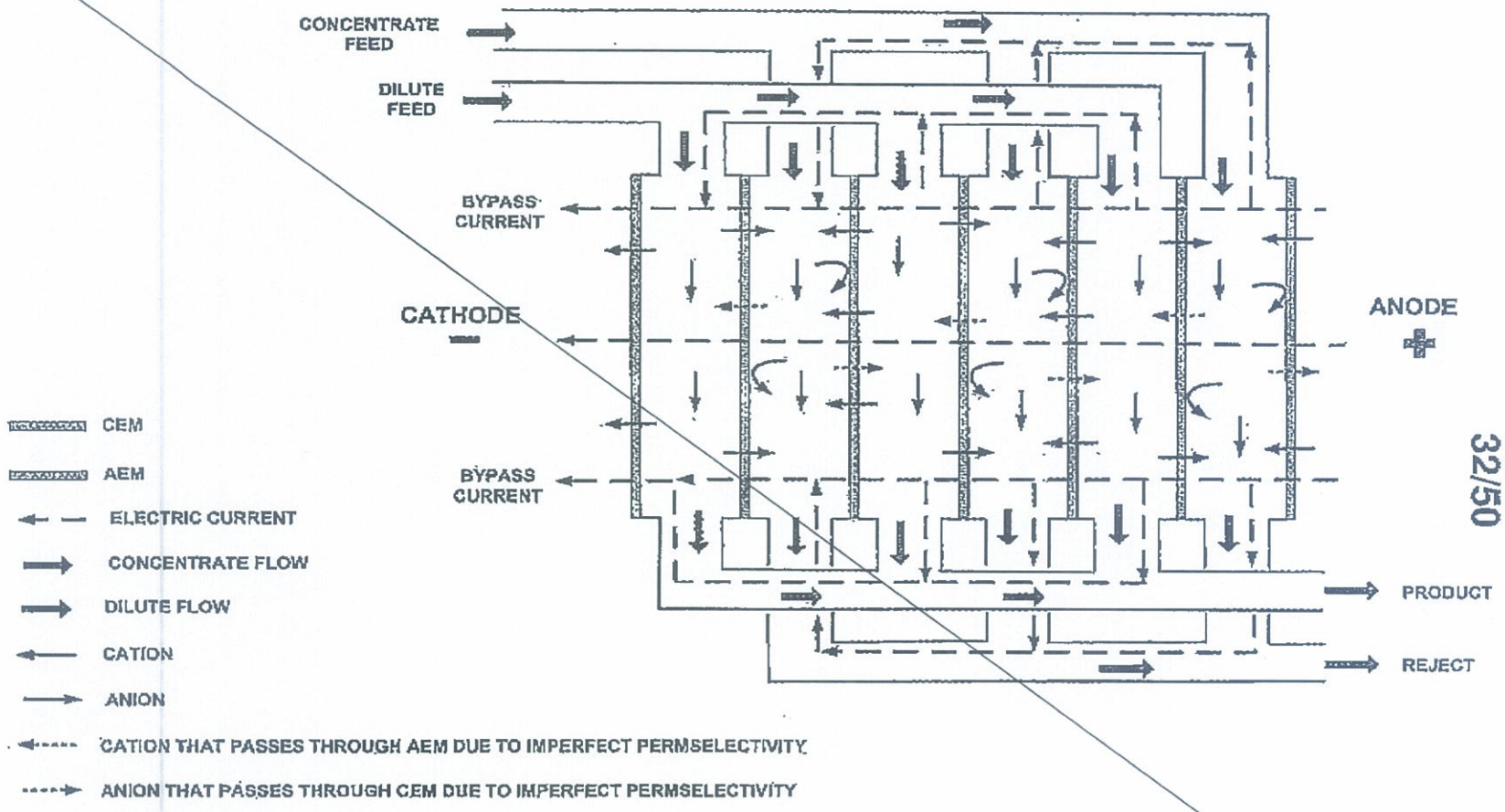
CONCENTRATE FEED
DILUTE FEED
BYPASS CURRENT
CATHODE
ANODE
BYPASS CURRENT
PRODUCT
REJECT
CEM
AEM
ELECTRIC CURRENT
CONCENTRATE FLOW
DILUTE FLOW
CATION
ANION
CATION THAT PASSES THROUGH AEM DUE TO IMPERFECT PERMSELECTIVITY
ANION THAT PASSES THROUGH CEM DUE TO IMPERFECT PERMSELECTIVITY

FIG. 32

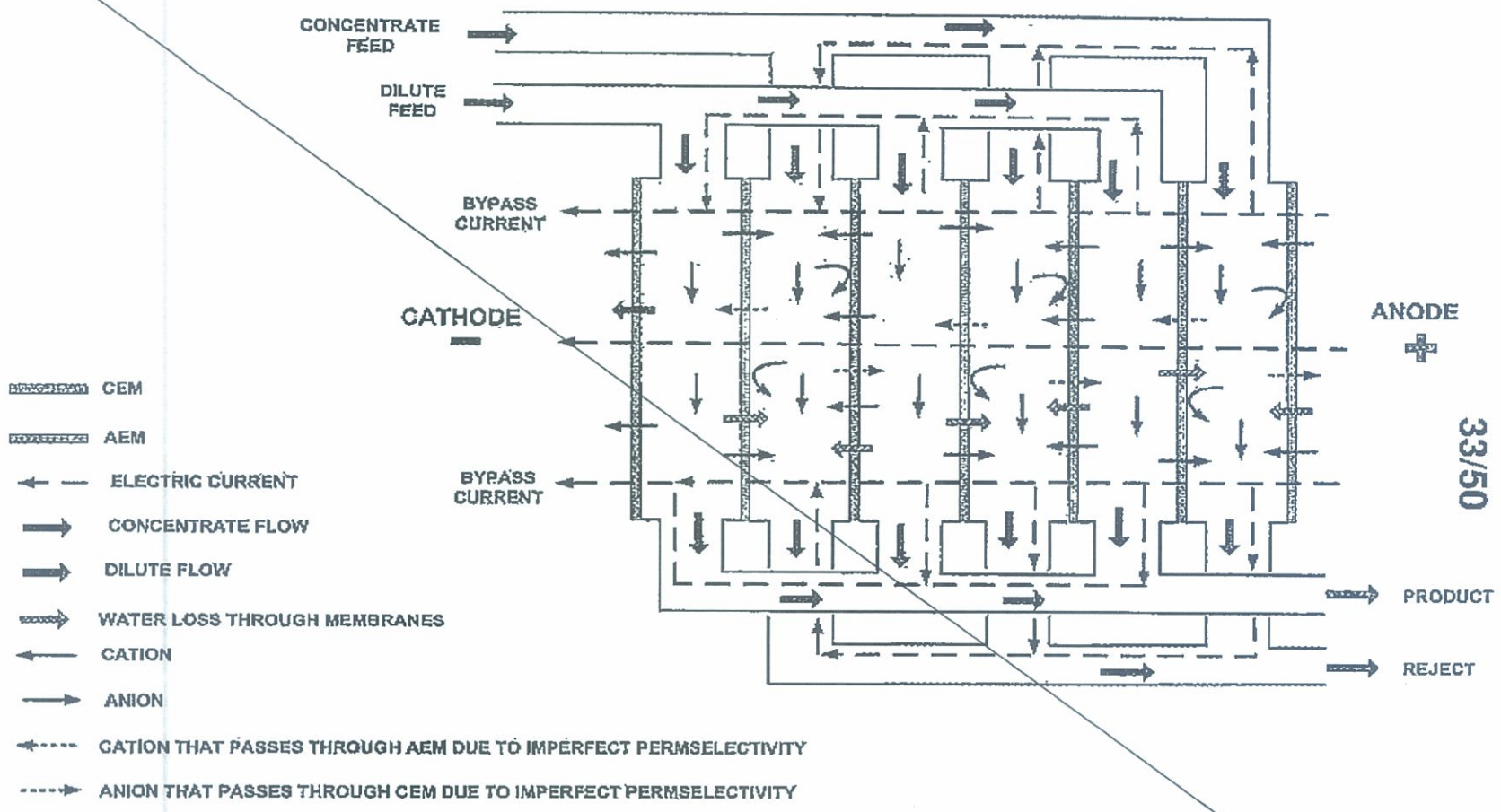
CONCENTRATE FEED
DILUTE FEED
BYPASS CURRENT
CATHODE
BYPASS CURRENT
ANODE
PRODUCT
REJECT
CEM
AEM
ELECTRIC CURRENT
CONCENTRATE FLOW
DILUTE FLOW
WATER LOSS THROUGH MEMBRANES
CATION
ANION
CATION THAT PASSES THROUGH AEM DUE TO IMPERFECT PERMSELECTIVITY
ANION THAT PASSES THROUGH CEM DUE TO IMPERFECT PERMSELECTIVITY

FIG. 33

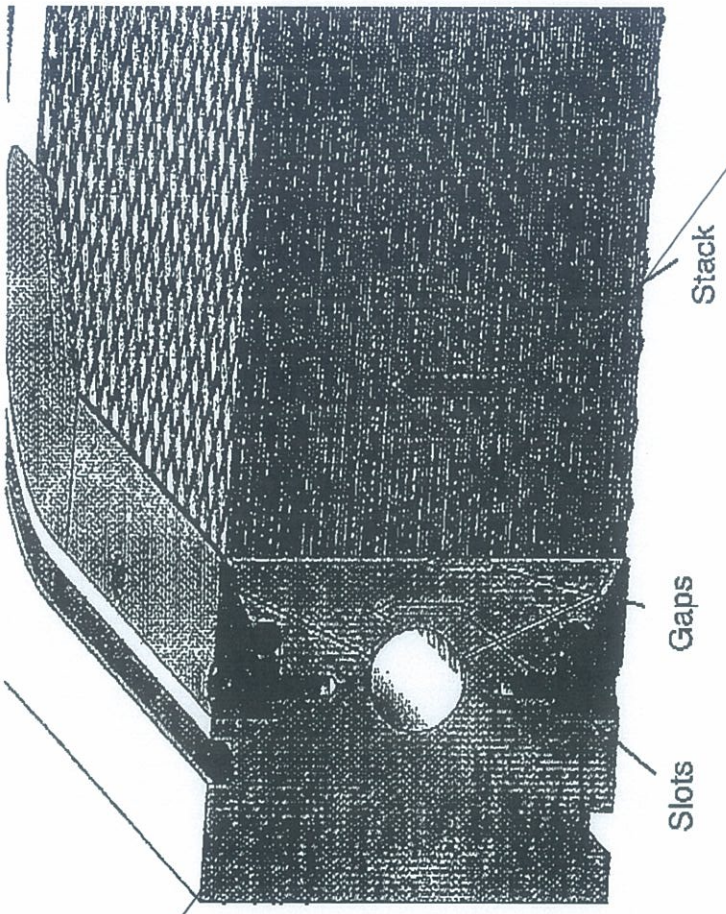

FIG. 34

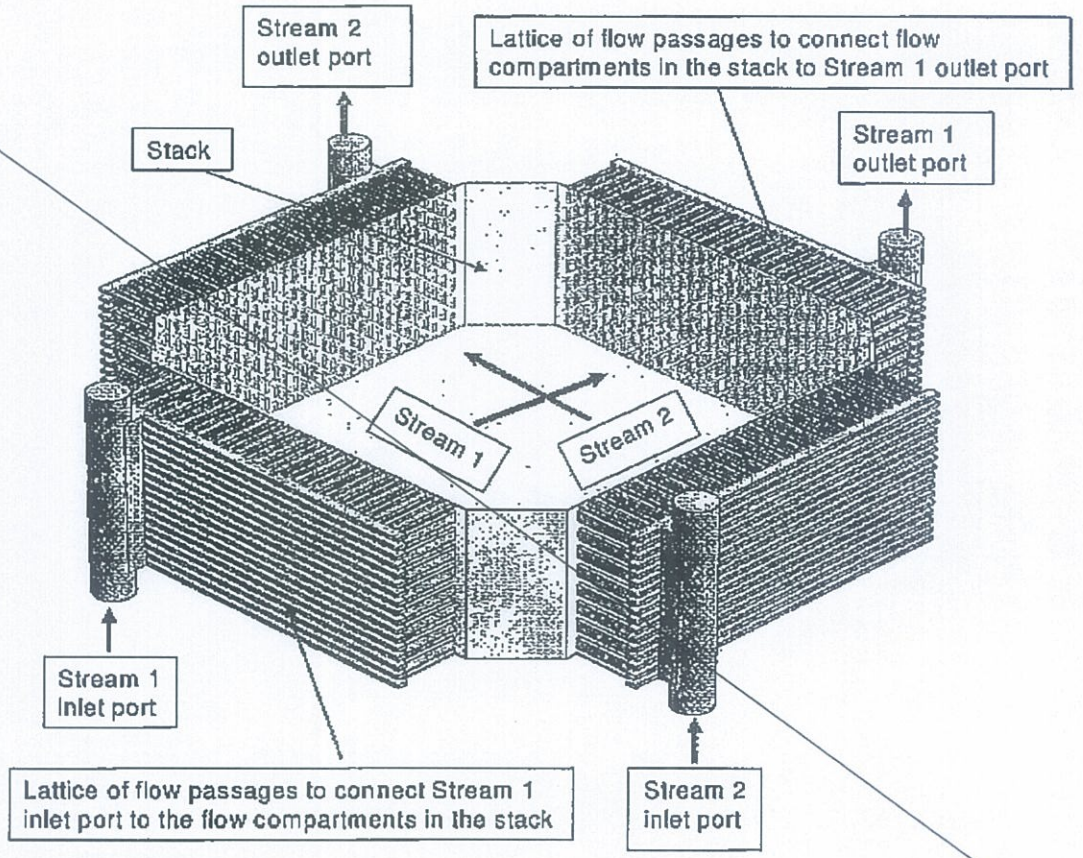
Stream 2
outlet port
Lattice of flow passages to connect flow
compartments in the stack to Stream 1 outlet port
Stack
Stream 1
outlet port
Stream 1
Stream 2
Stream 1
Inlet port
Lattice of flow passages to connect Stream 1
inlet port to the flow compartments in the stack
Stream 2
inlet port

FIG. 35

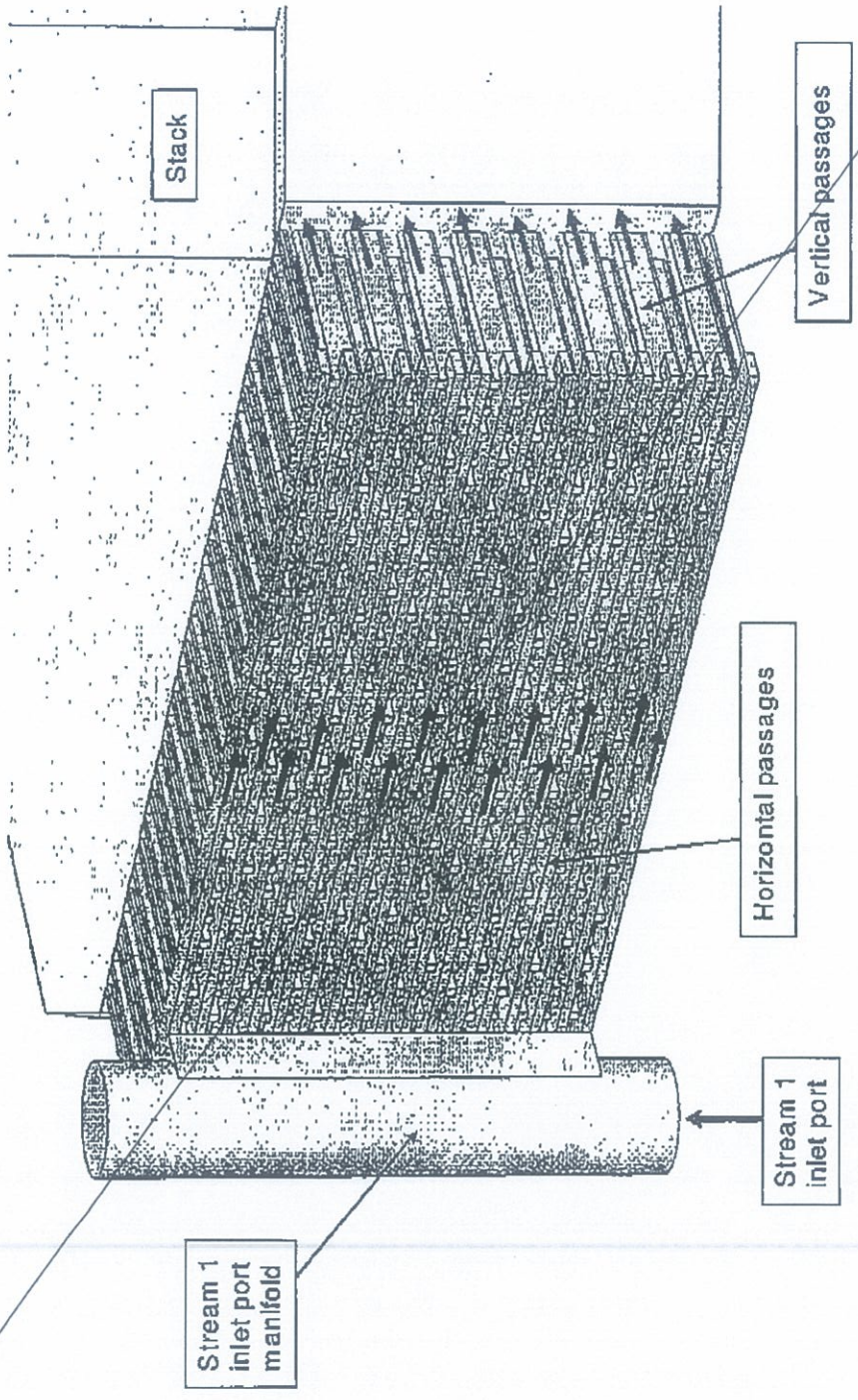
Stack
Vertical passages
Horizontal passages
Stream 1 inlet port
Stream 1 inlet port manifold

FIG. 36

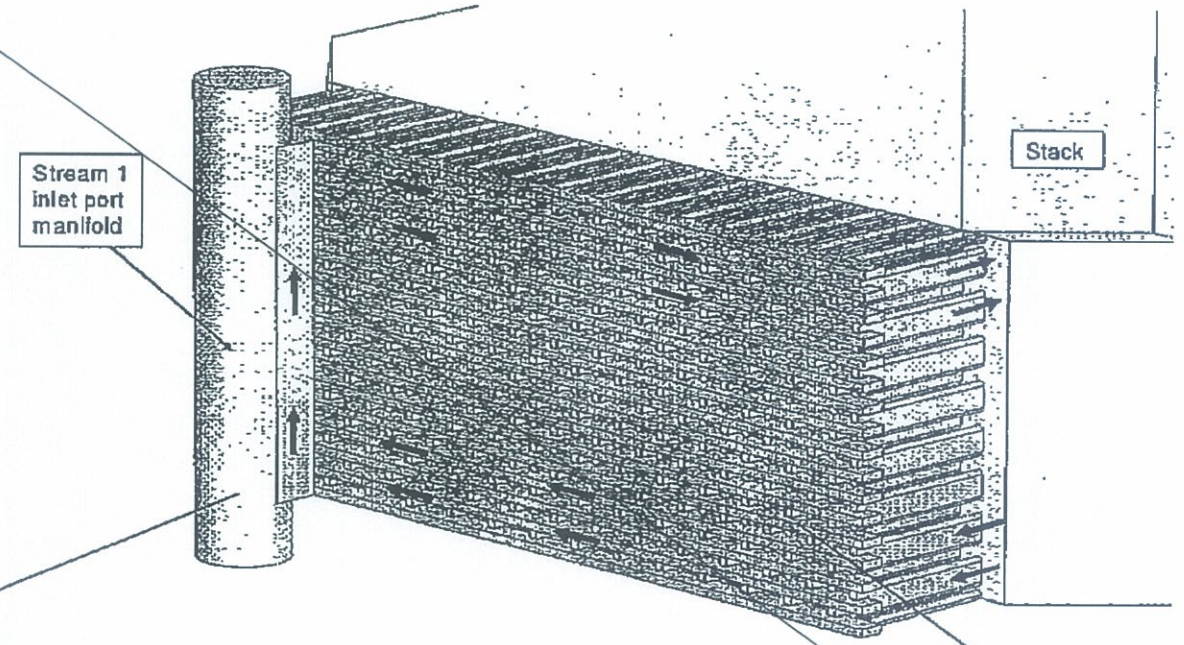

FIG. 37

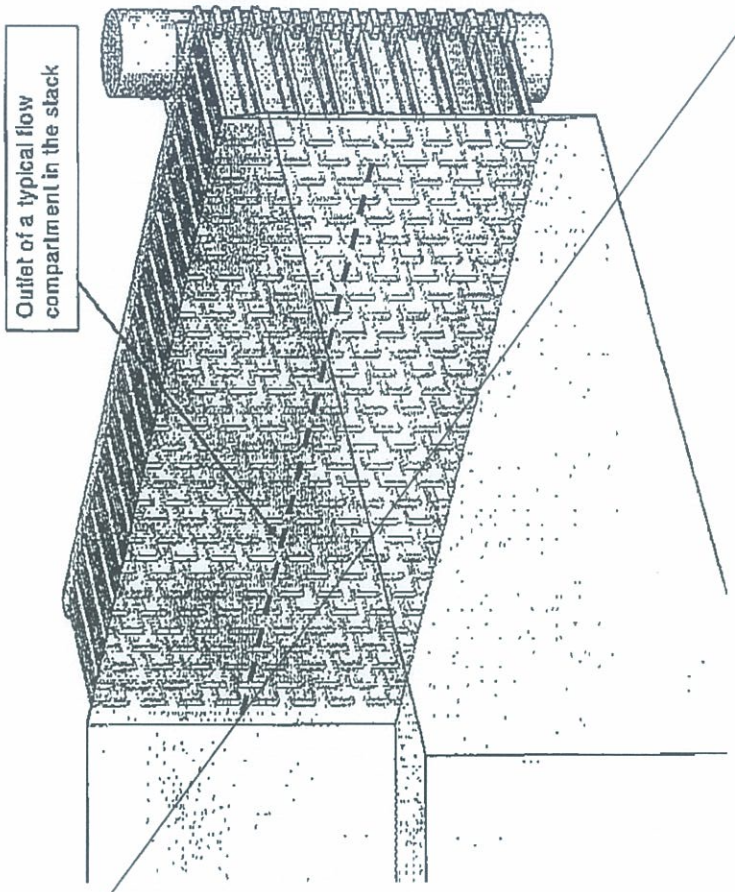

FIG. 38

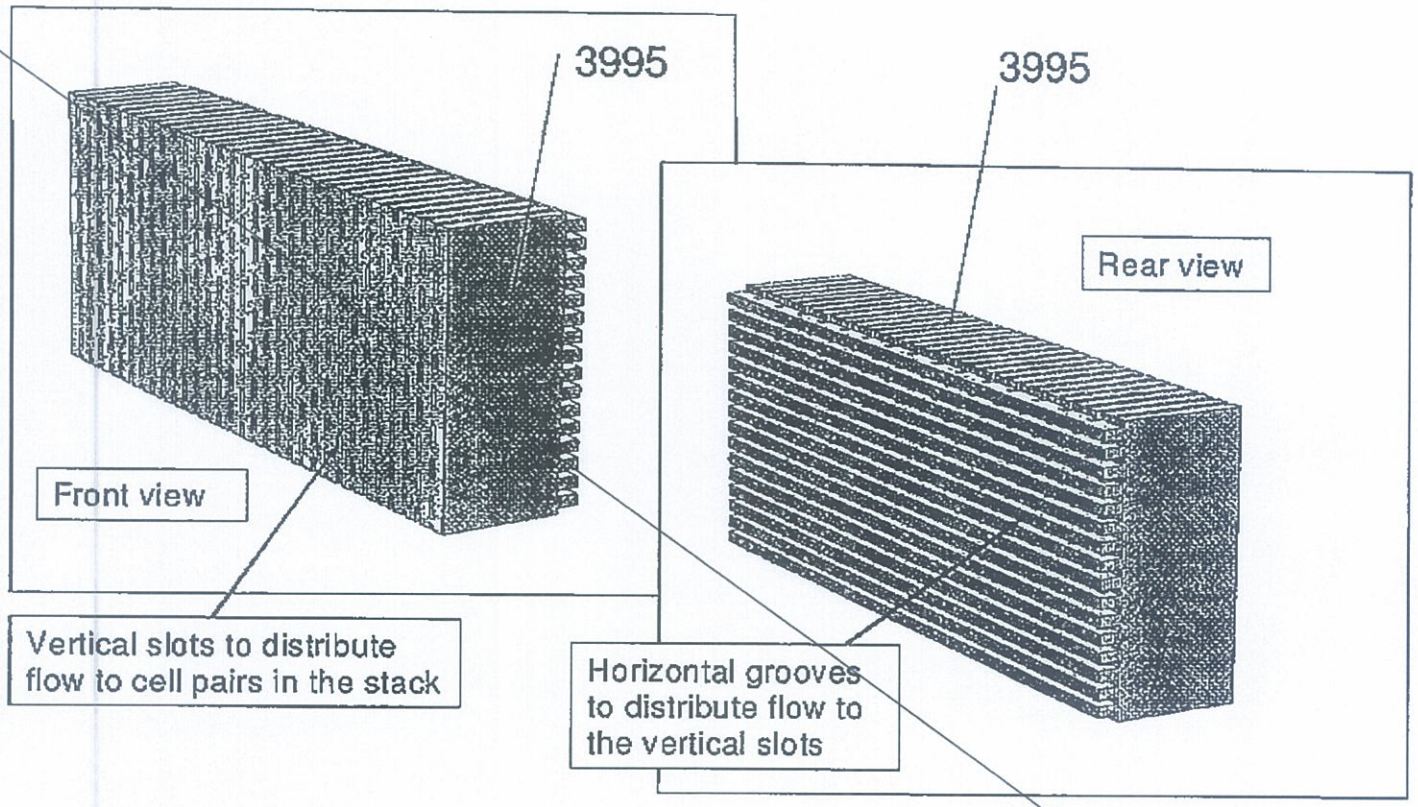
3995
3995
Rear view
Front view
Vertical slots to distribute flow to cell pairs in the stack
Horizontal grooves to distribute flow to the vertical slots

FIG. 39

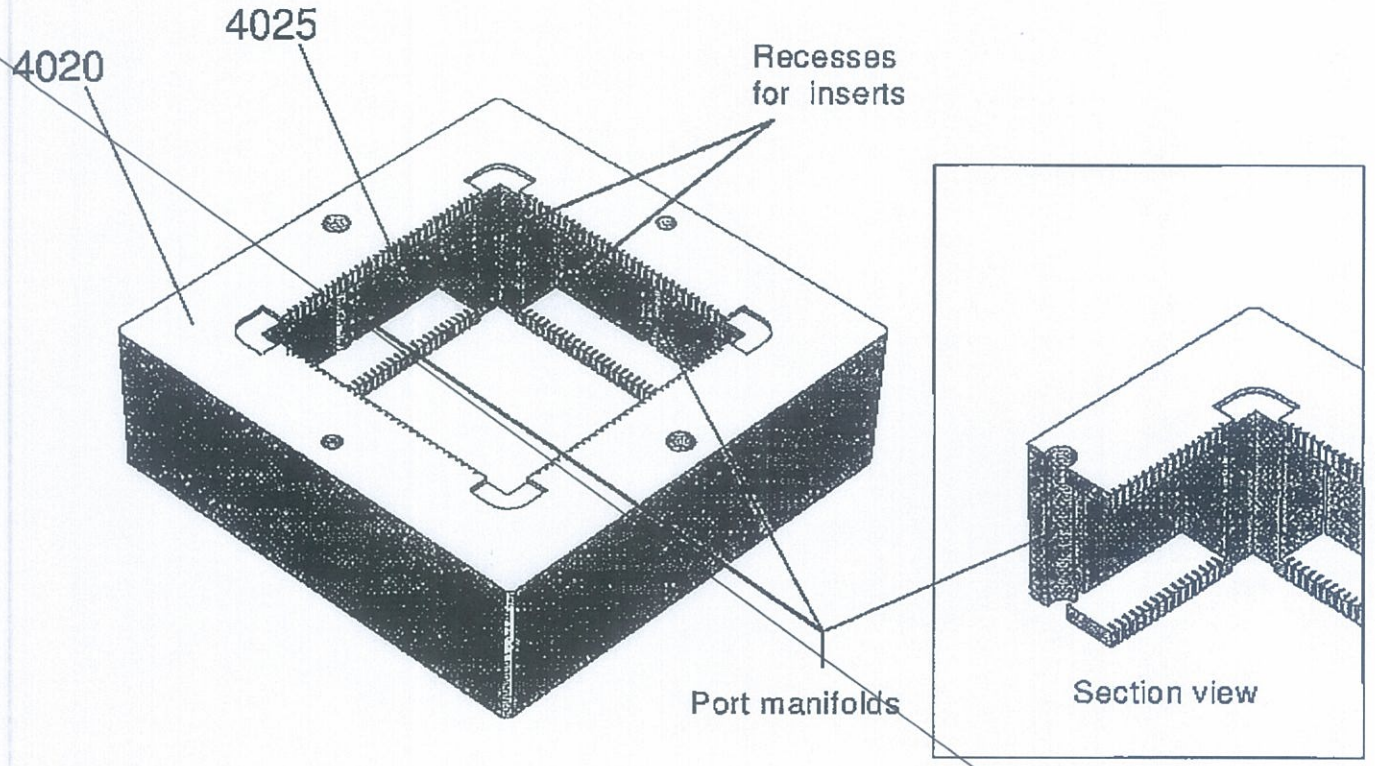
4020
4025
Recesses
for inserts
Port manifolds
Section view

FIG. 40

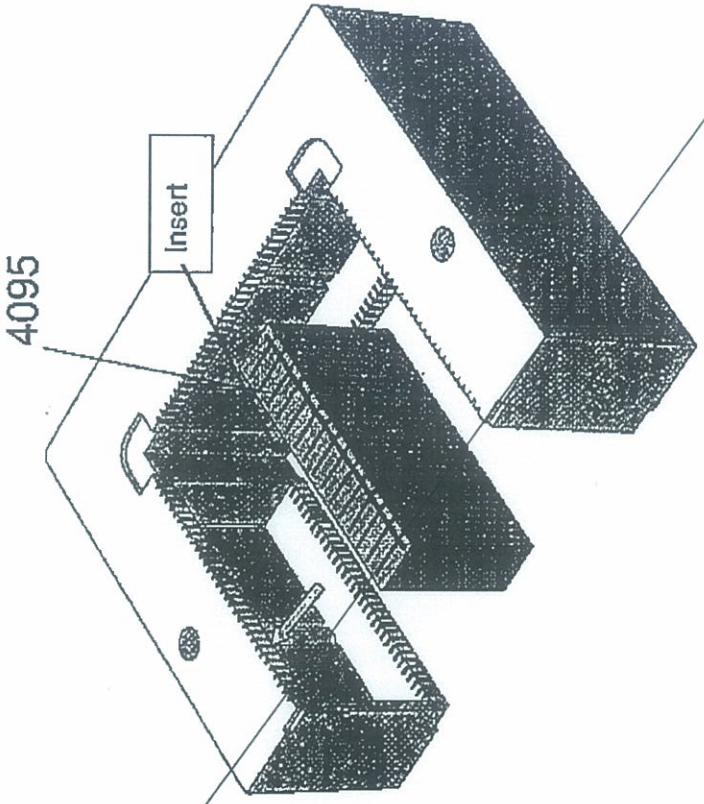

FIG. 41

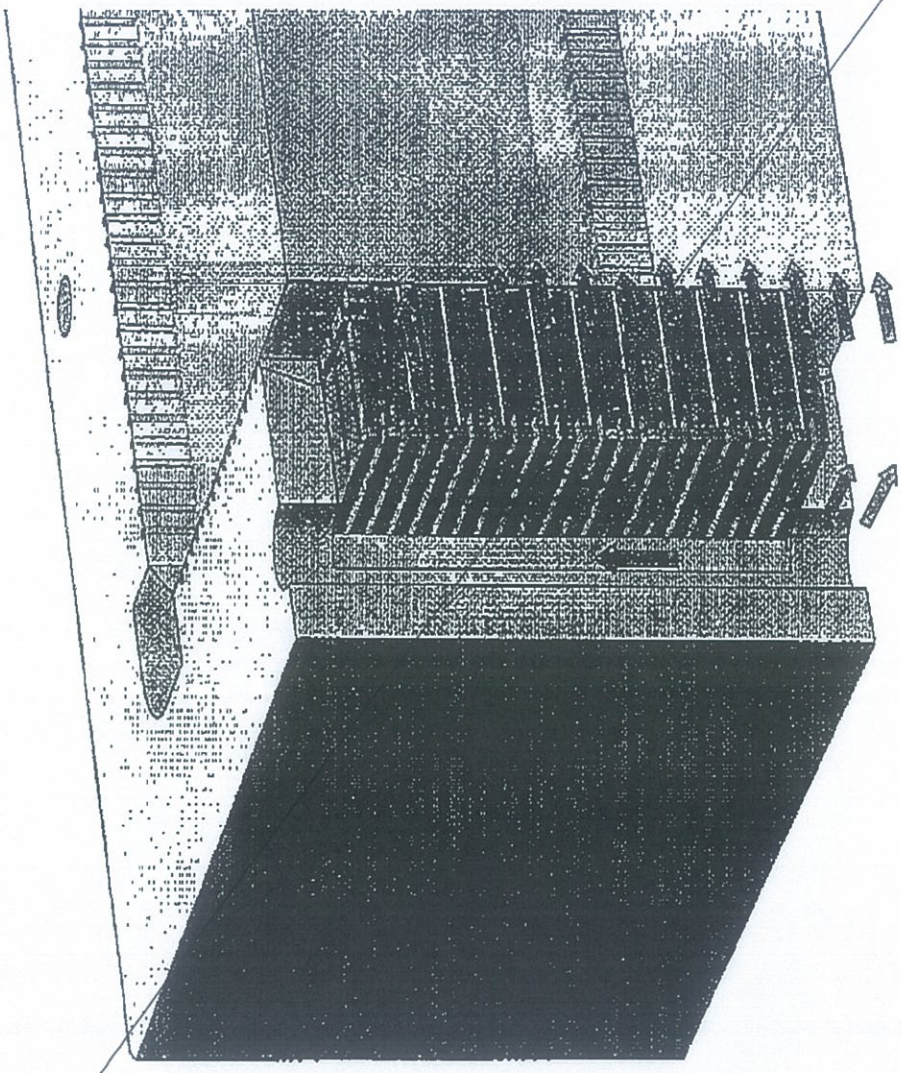

FIG. 42

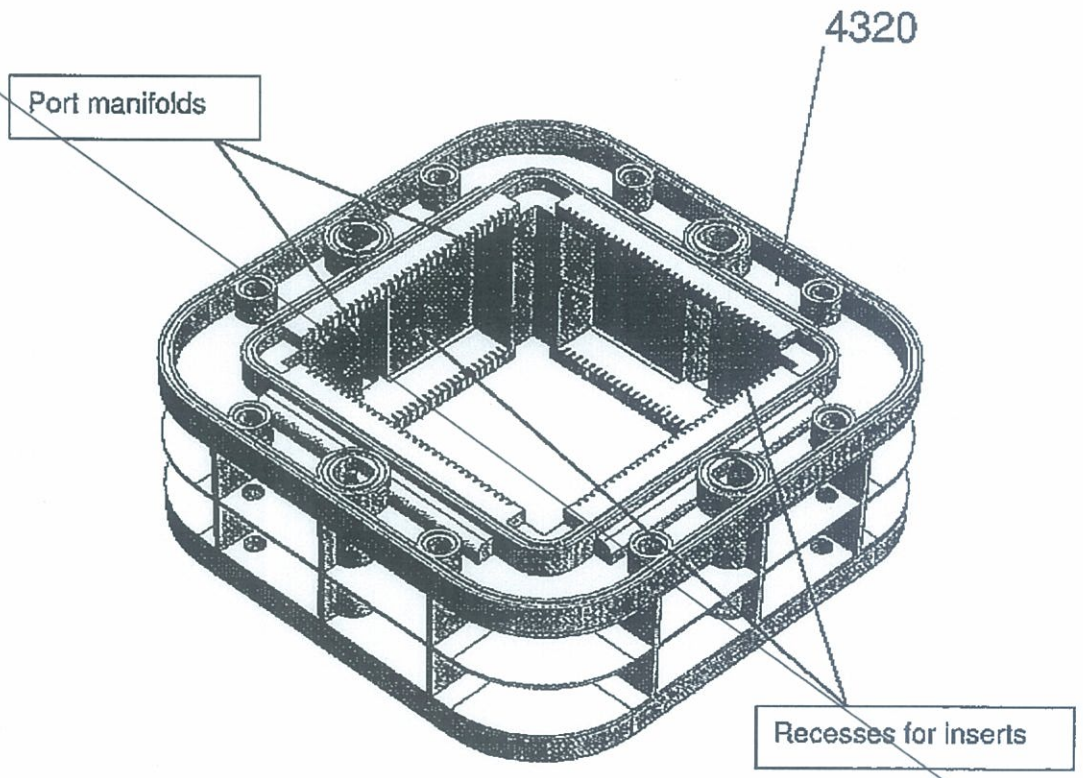

FIG. 43

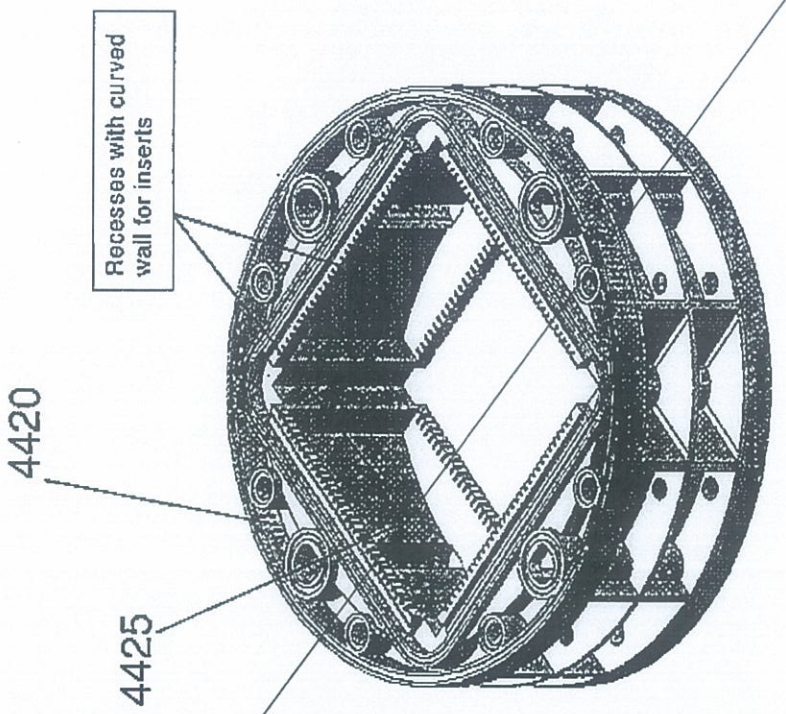

FIG. 44

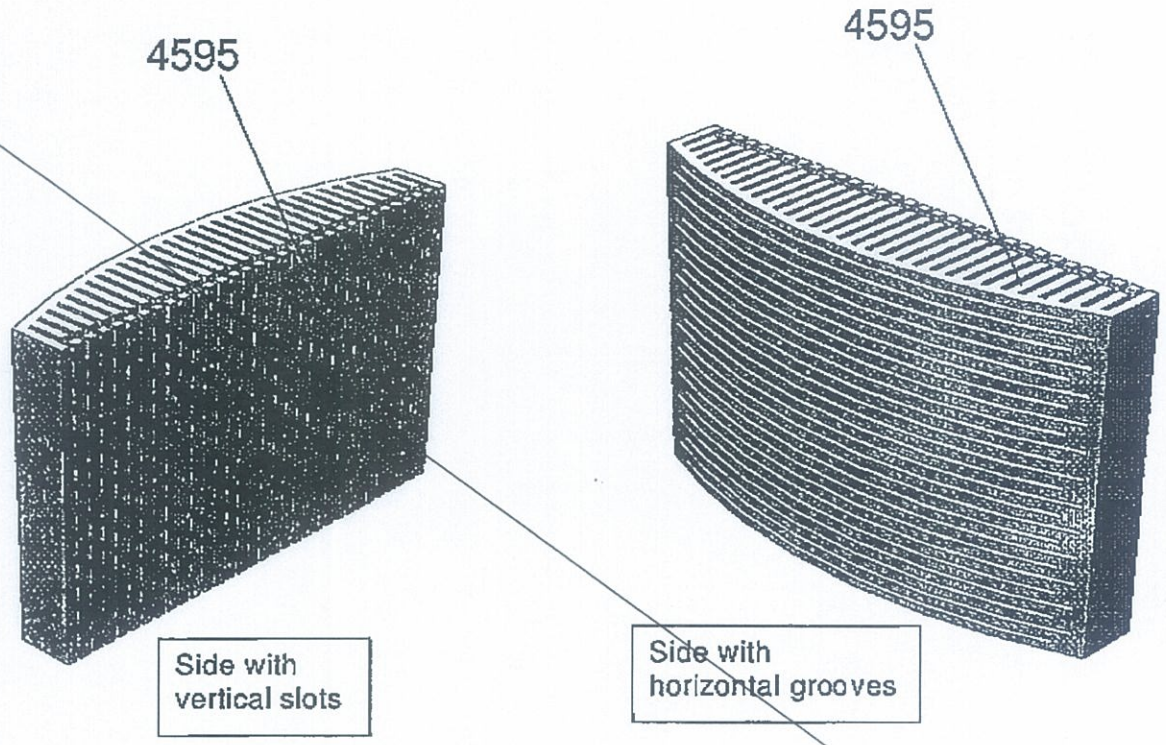
4595
4595
Side with
vertical slots
Side with
horizontal grooves

FIG. 45

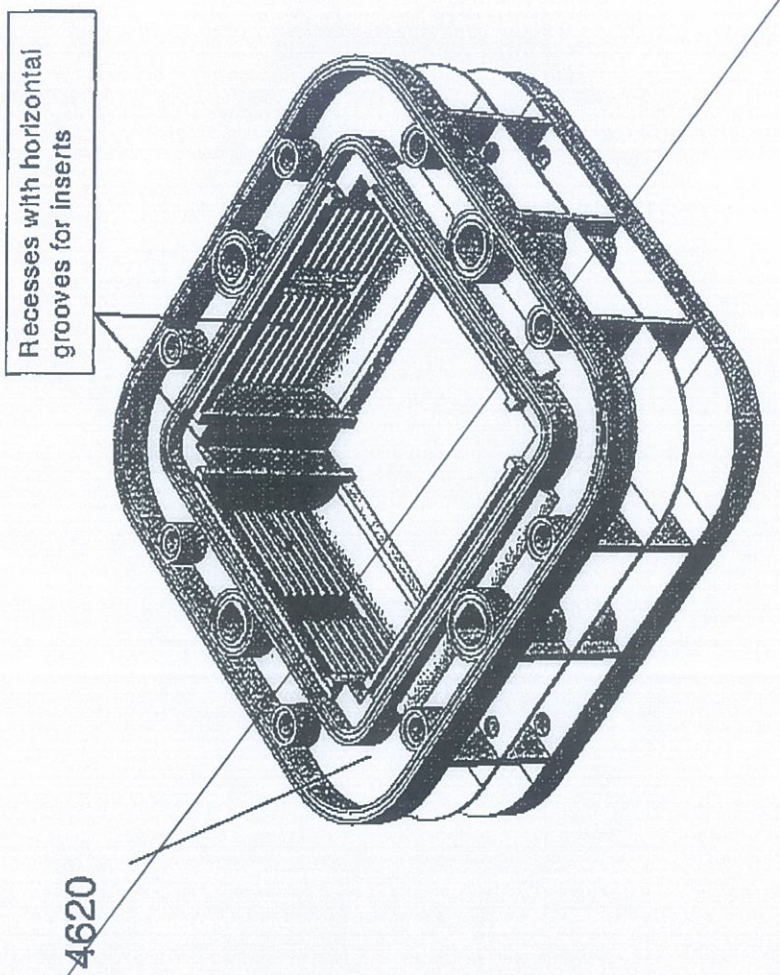

FIG. 46

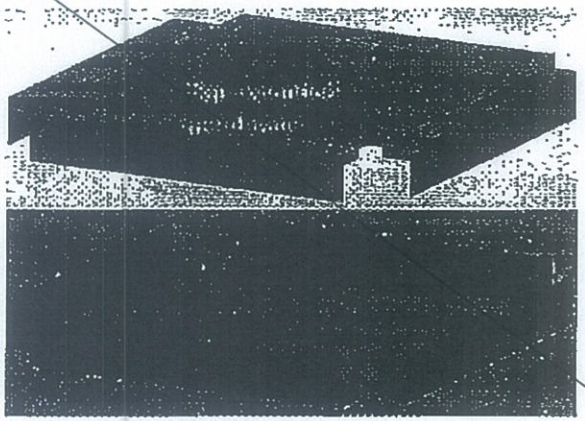

FIG. 47A

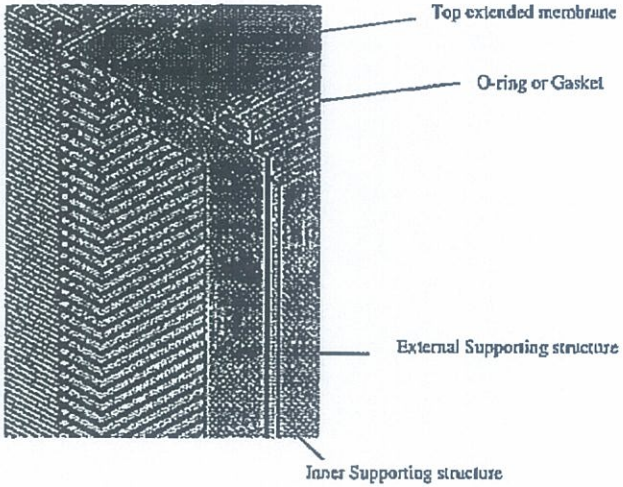

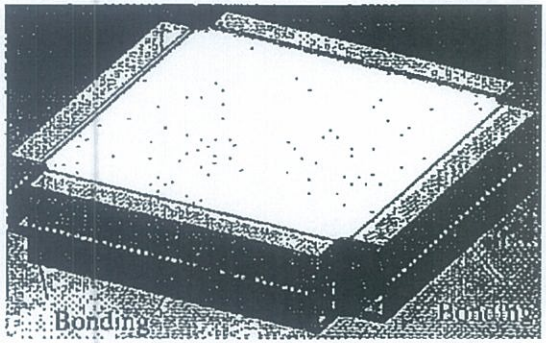

FIG. 47B

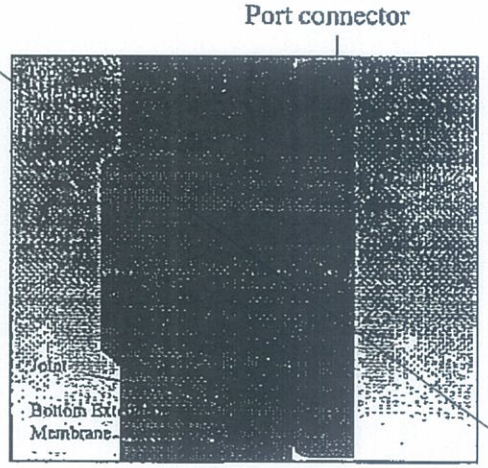

FIG. 47C

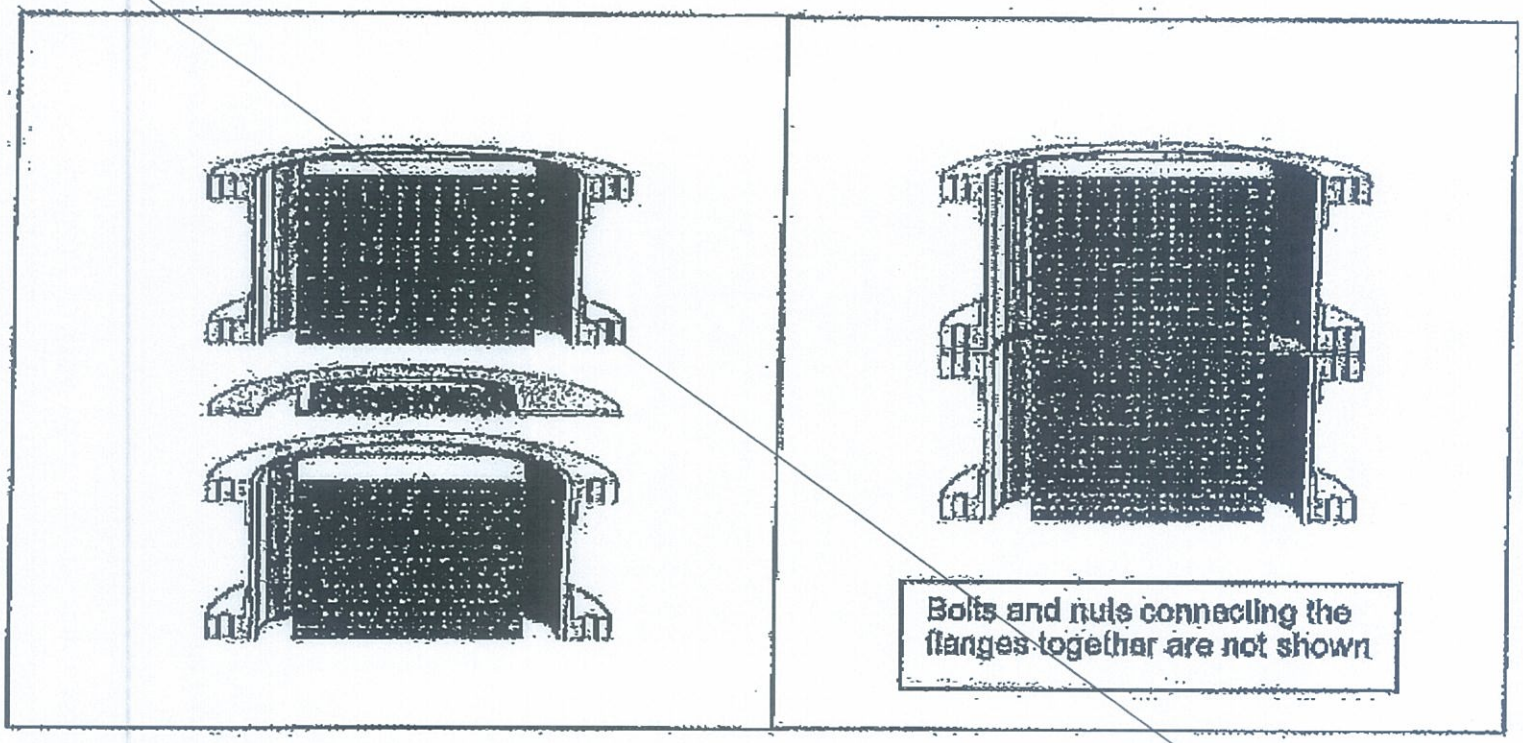
Bolts and nuts connecting the flanges together are not shown

FIG. 48

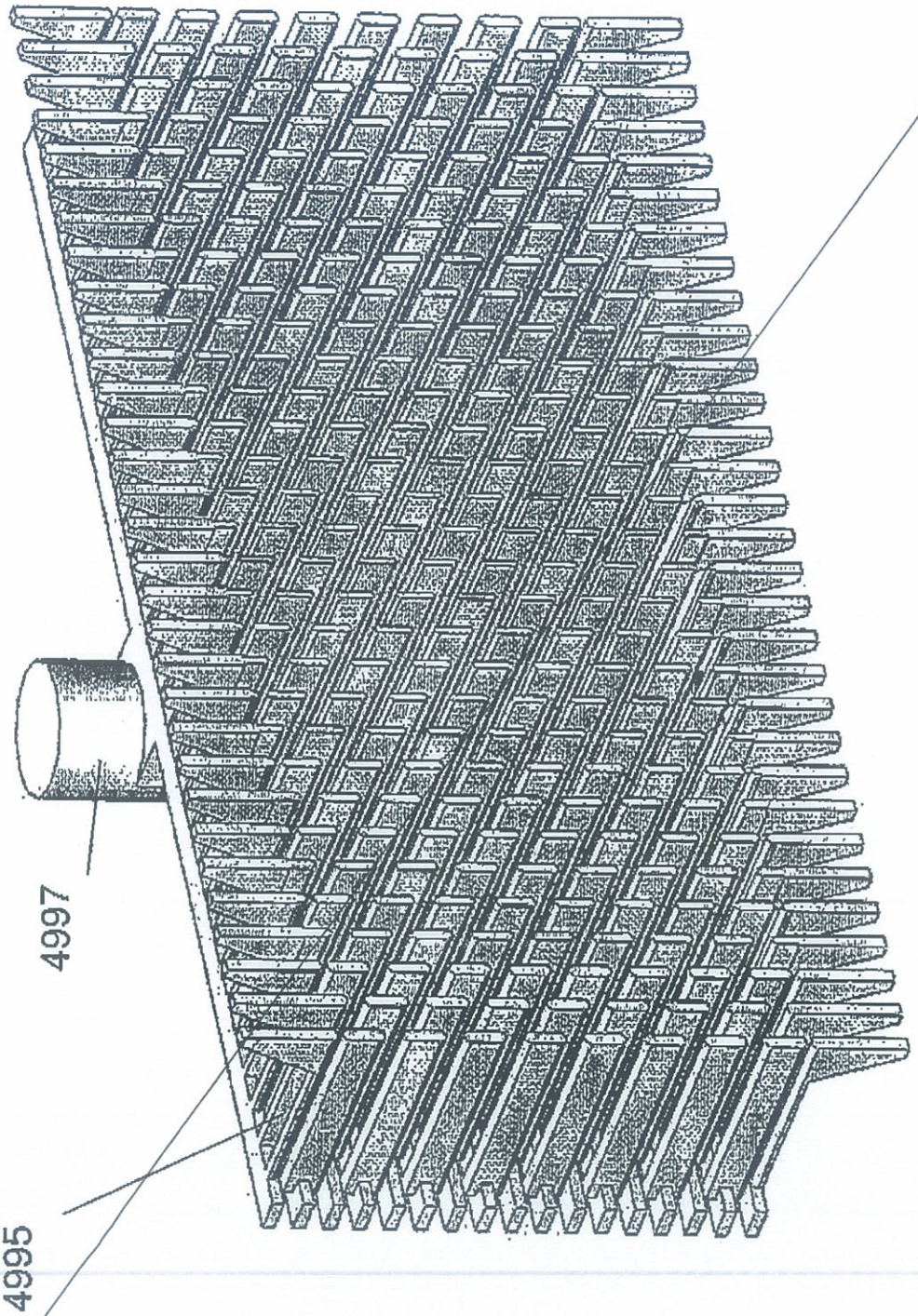

FIG. 49

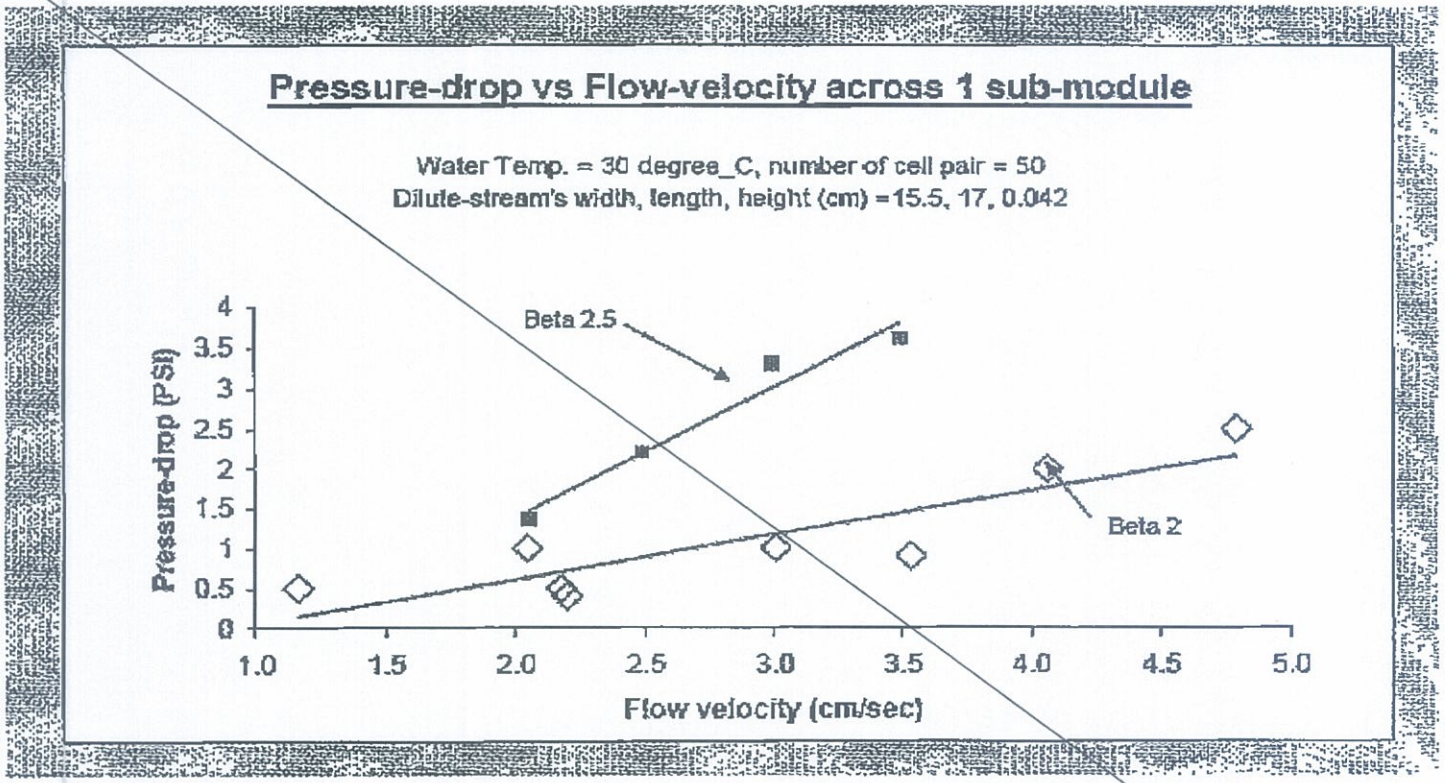
Pressure-drop vs Flow-velocity across 1 sub-module
Water Temp. = 30 degree_C, number of cell pair = 50
Dilute-stream's width, length, height (cm) =15.5, 17, 0.042
Beta 2.5
Beta 2
Pressure-drop (PSI)
Flow velocity (cm/sec)
0
0.5
1
1.5
2
2.5
3
3.5
4
1.0
1.5
2.0
2.5
3.0
3.5
4.0
4.5
5.0

FIG. 50

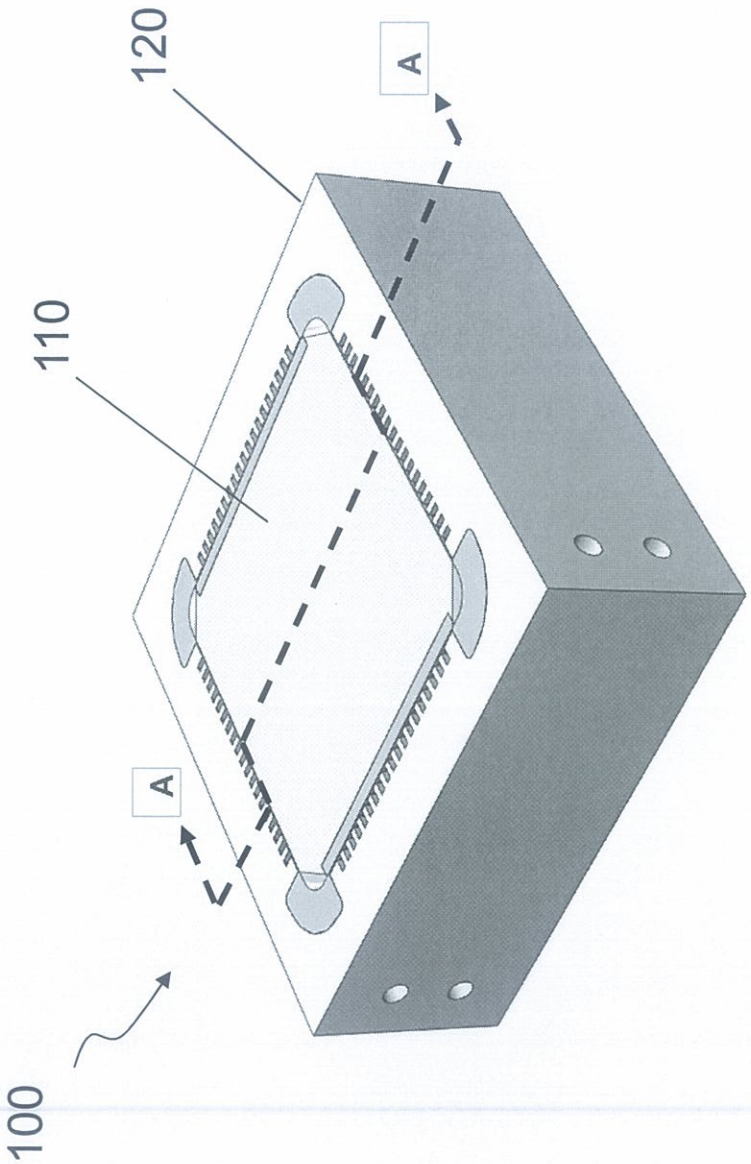

FIG. 1

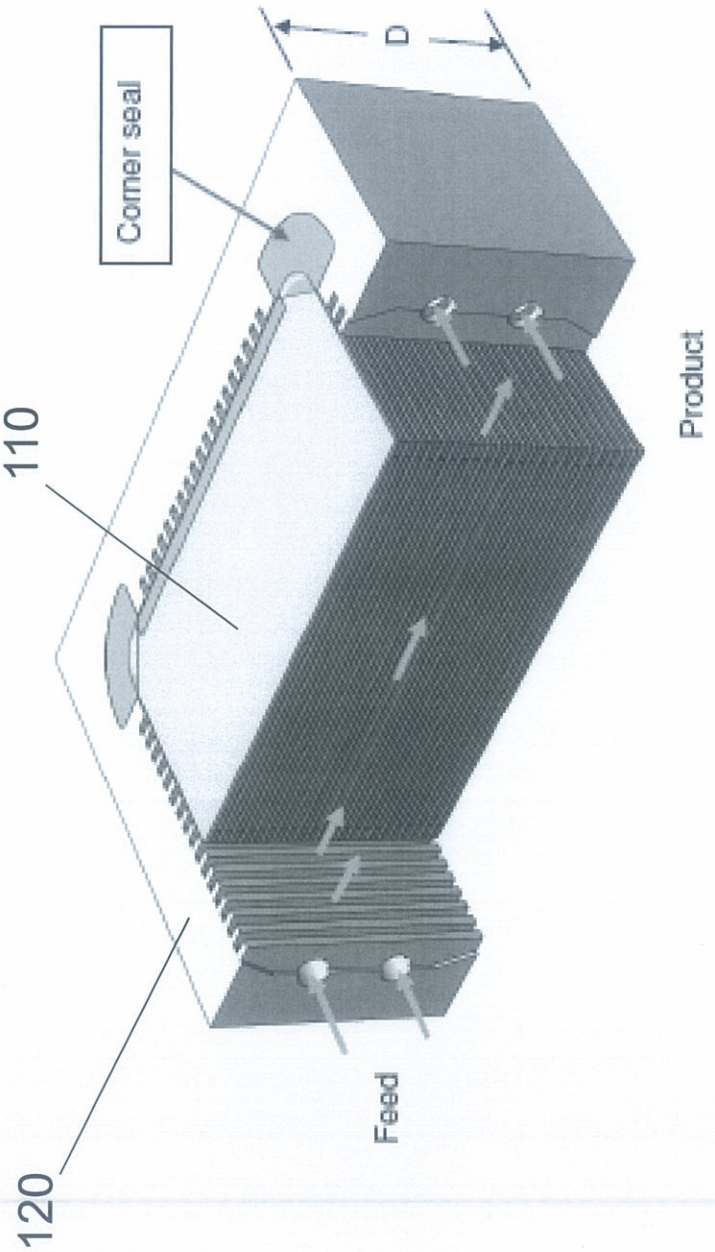

FIG. 2

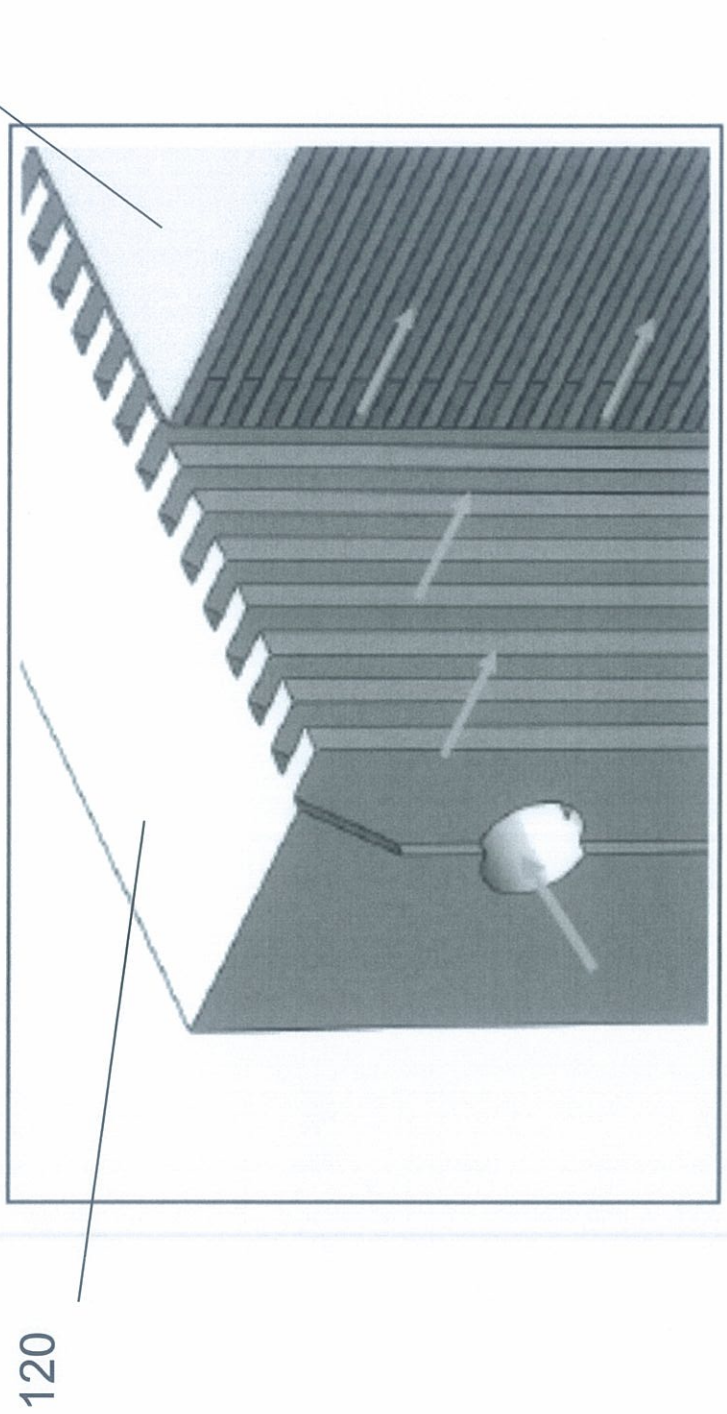

FIG. 3

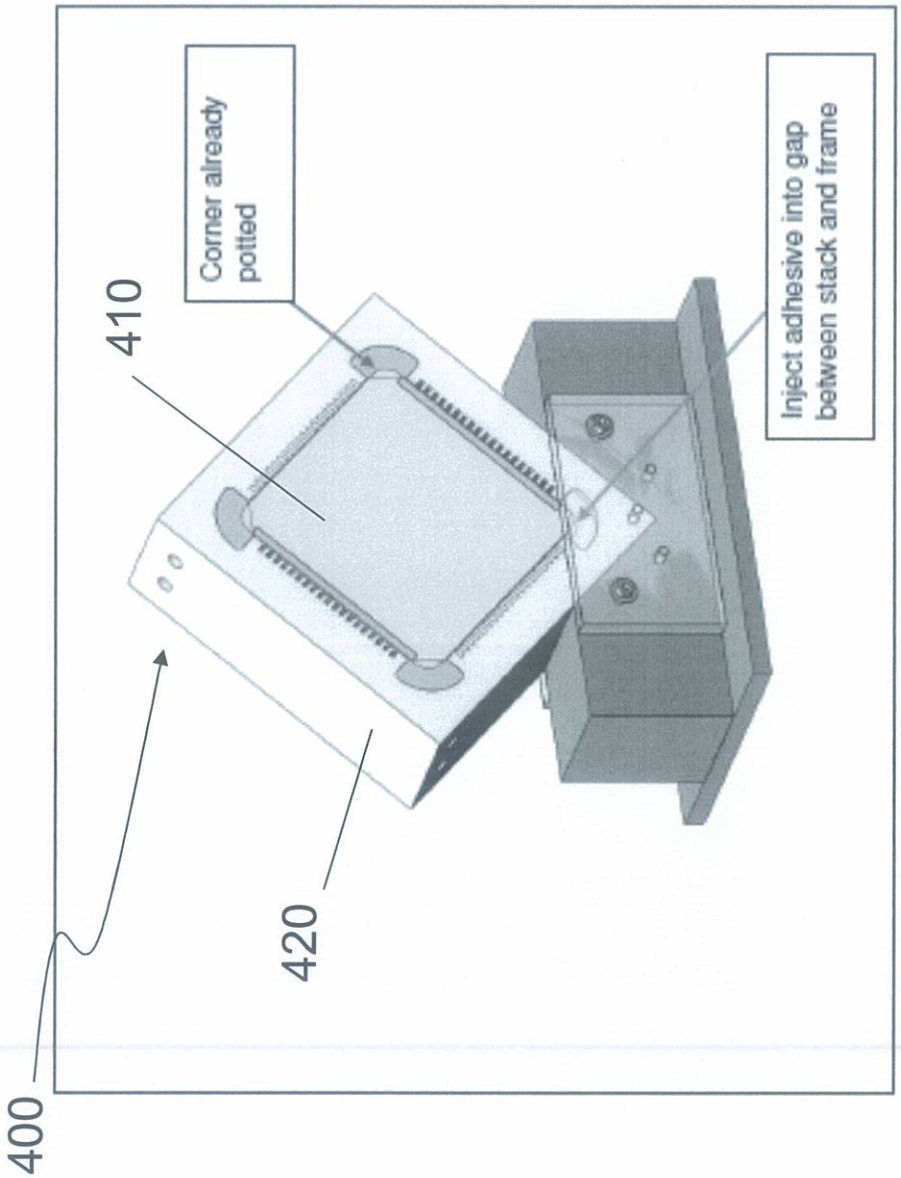
Corner already potted
410
Inject adhesive into gap between stack and frame
420
400

FIG. 4

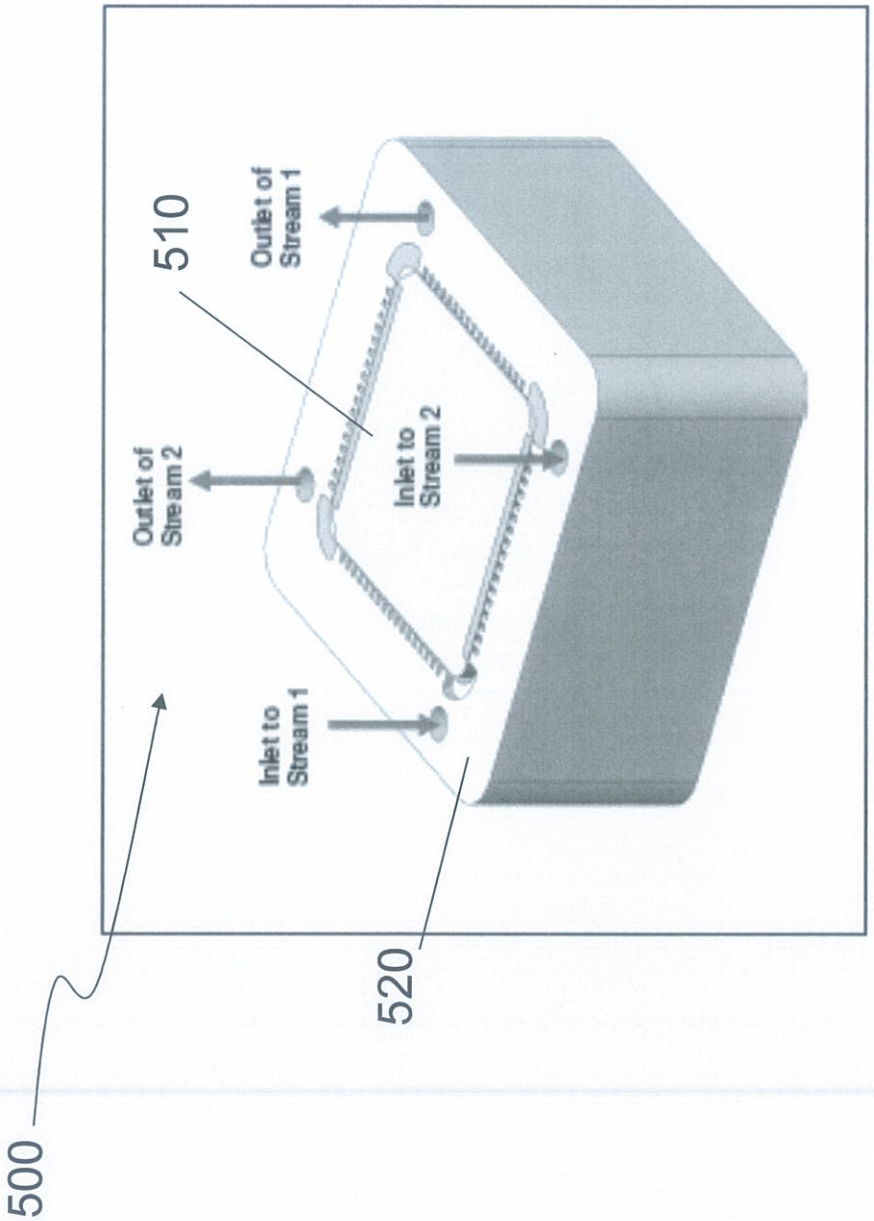
500
510
520
Outlet of Stream 1
Outlet of Stream 2
Inlet to Stream 1
Inlet to Stream 2

FIG. 5

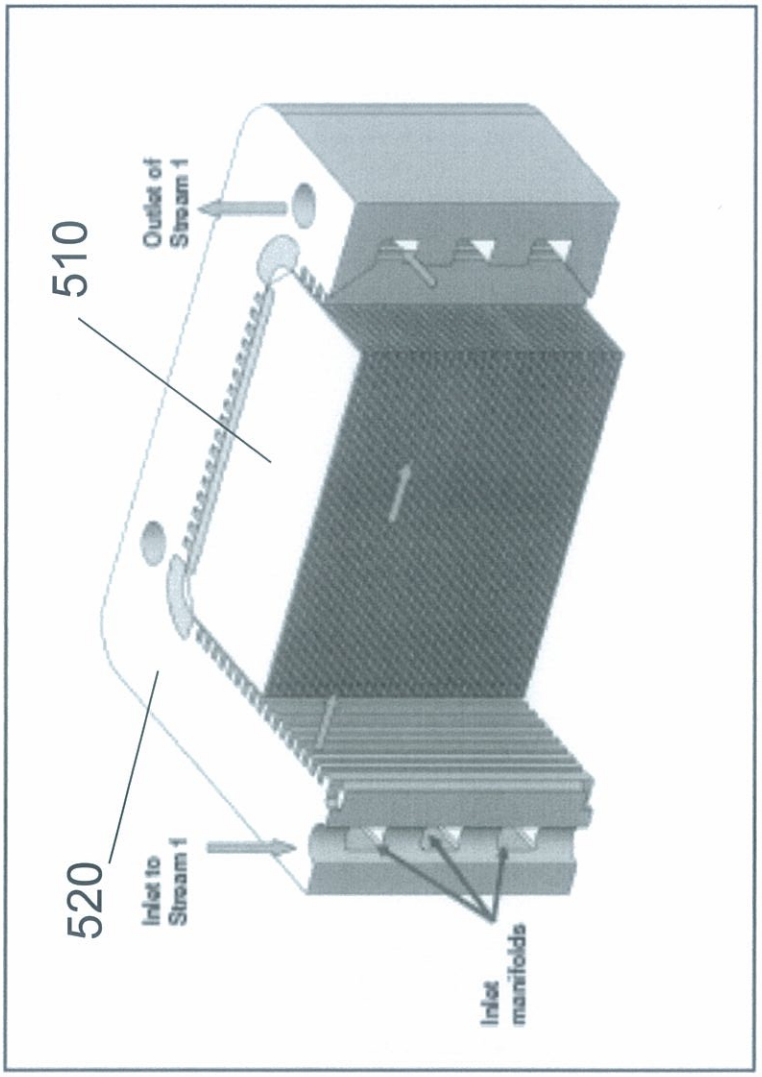

FIG. 6

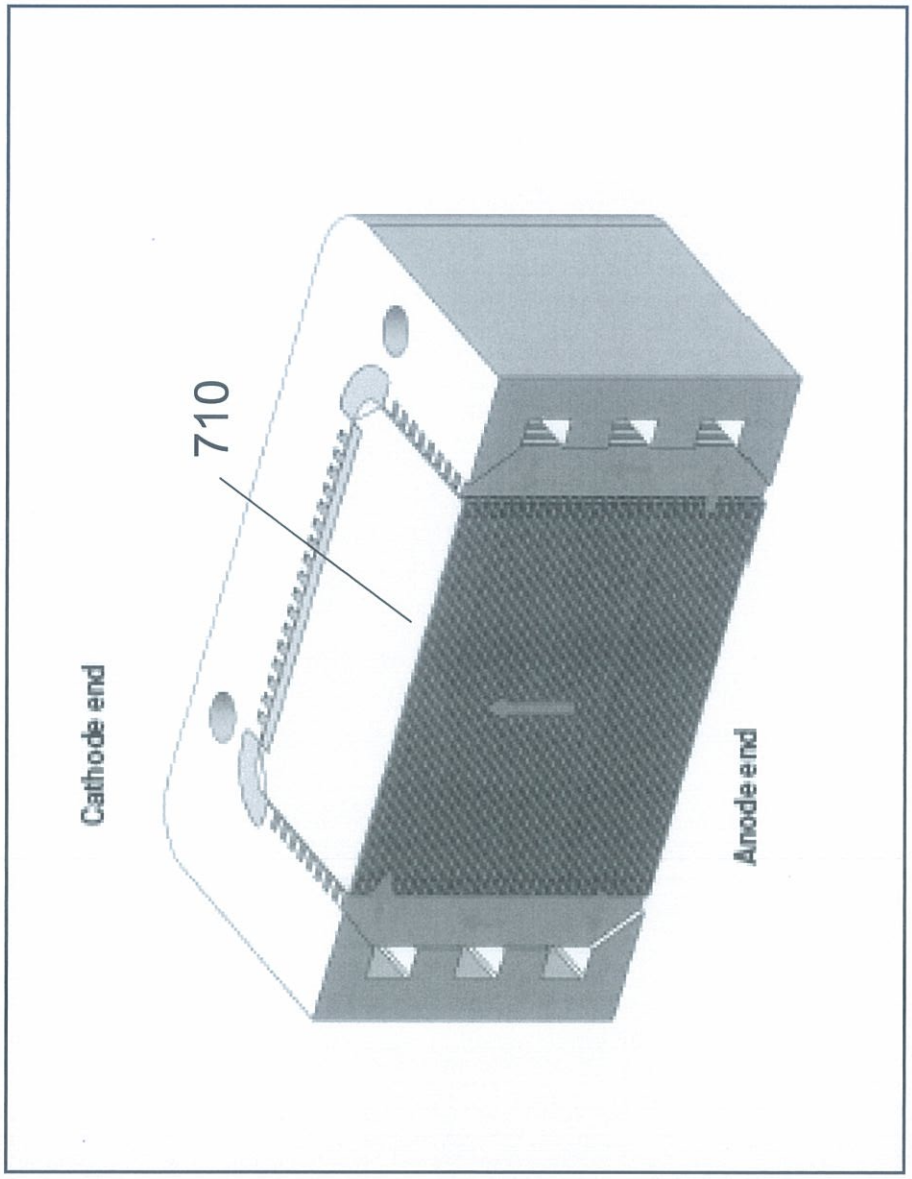

FIG. 7

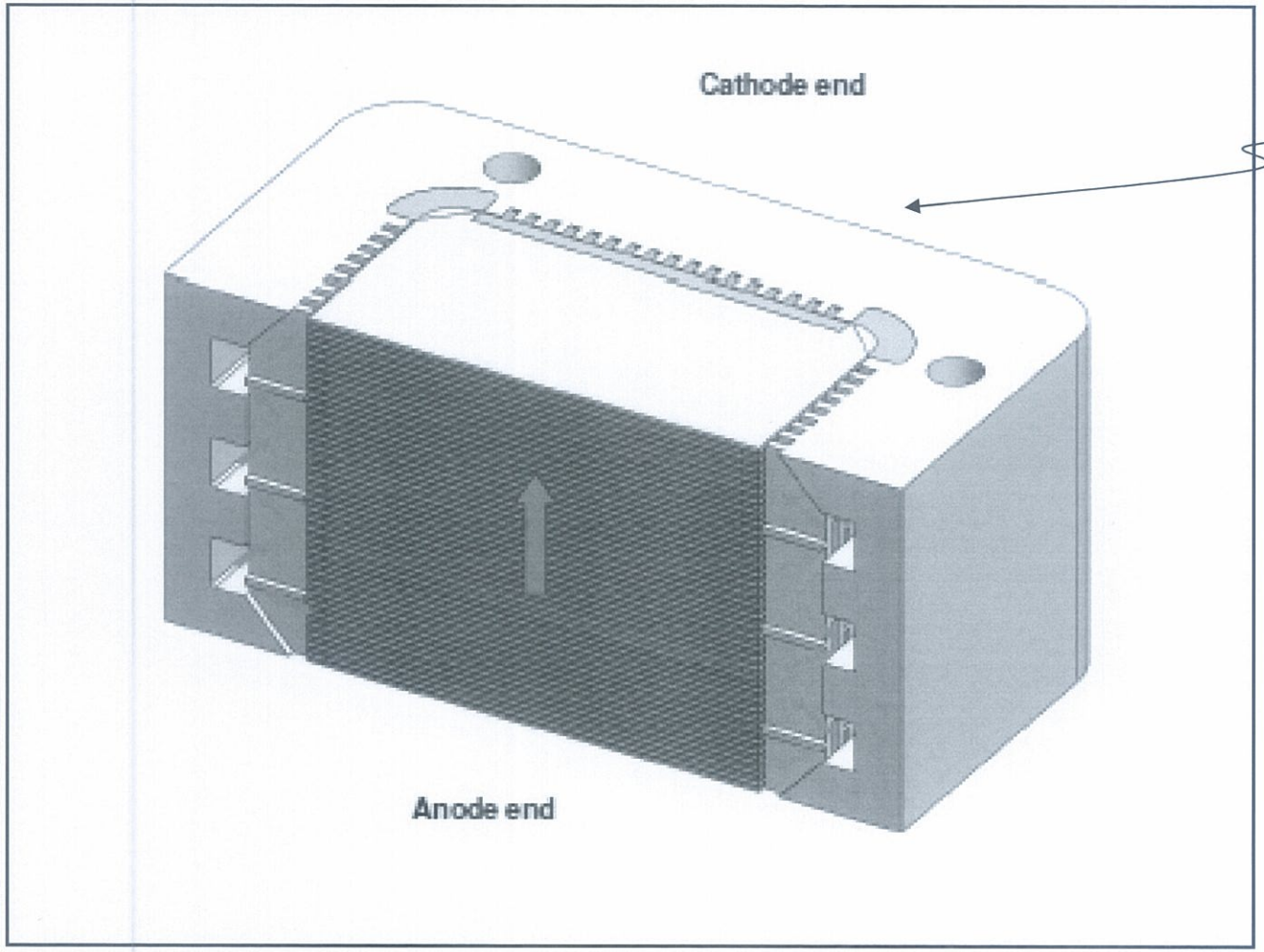

FIG. 8

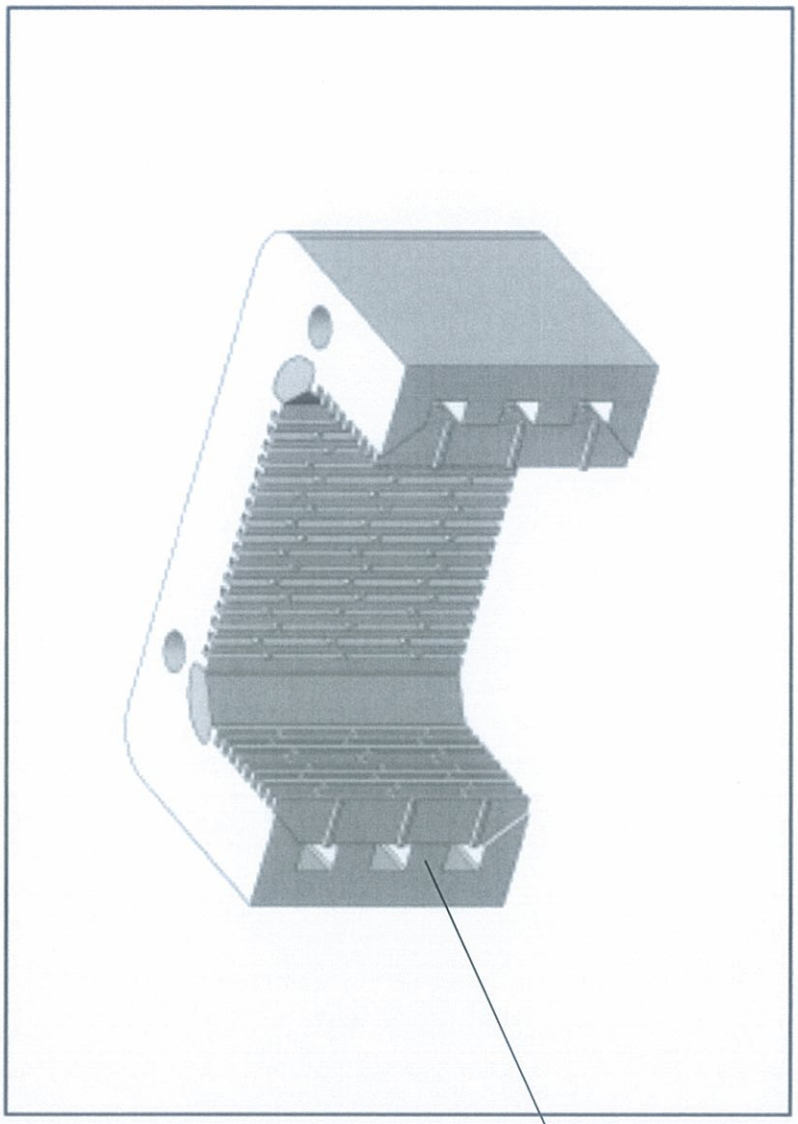

FIG. 9

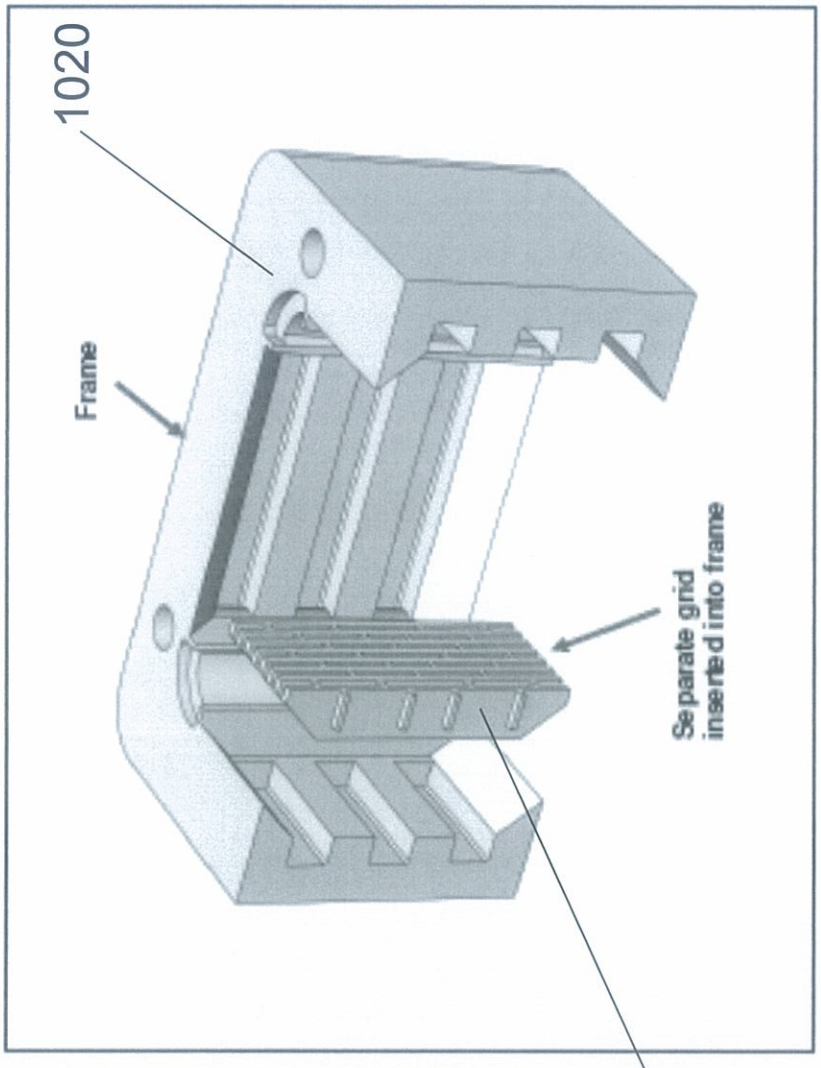

FIG. 10

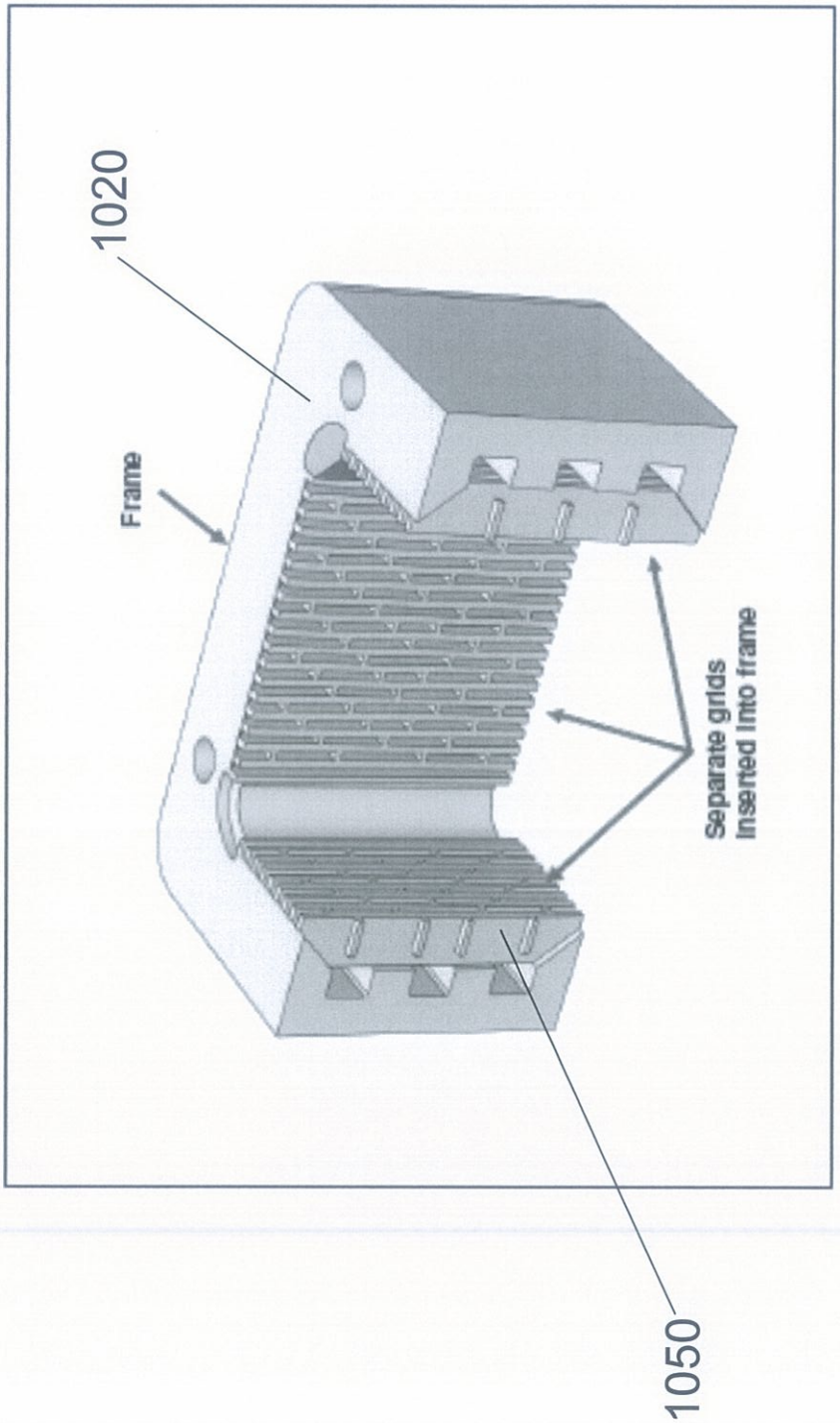

FIG. 11

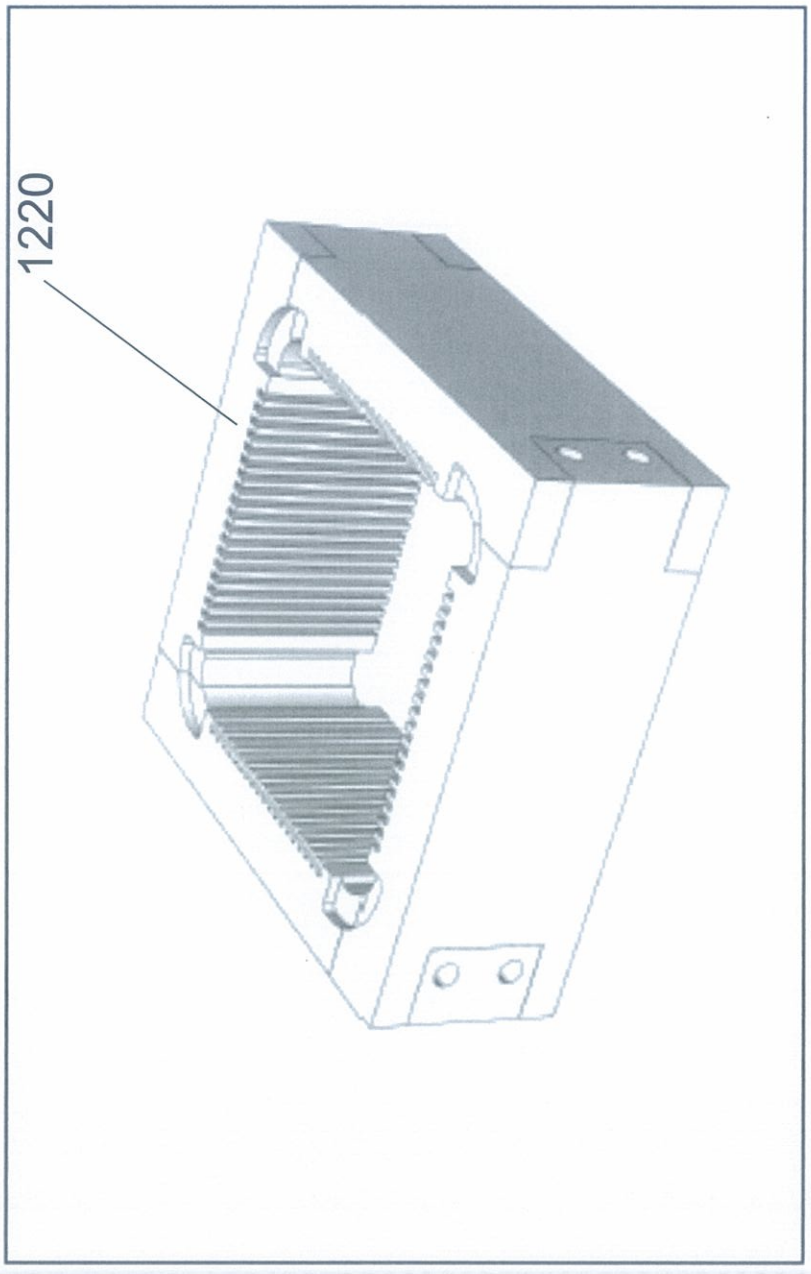

FIG. 12

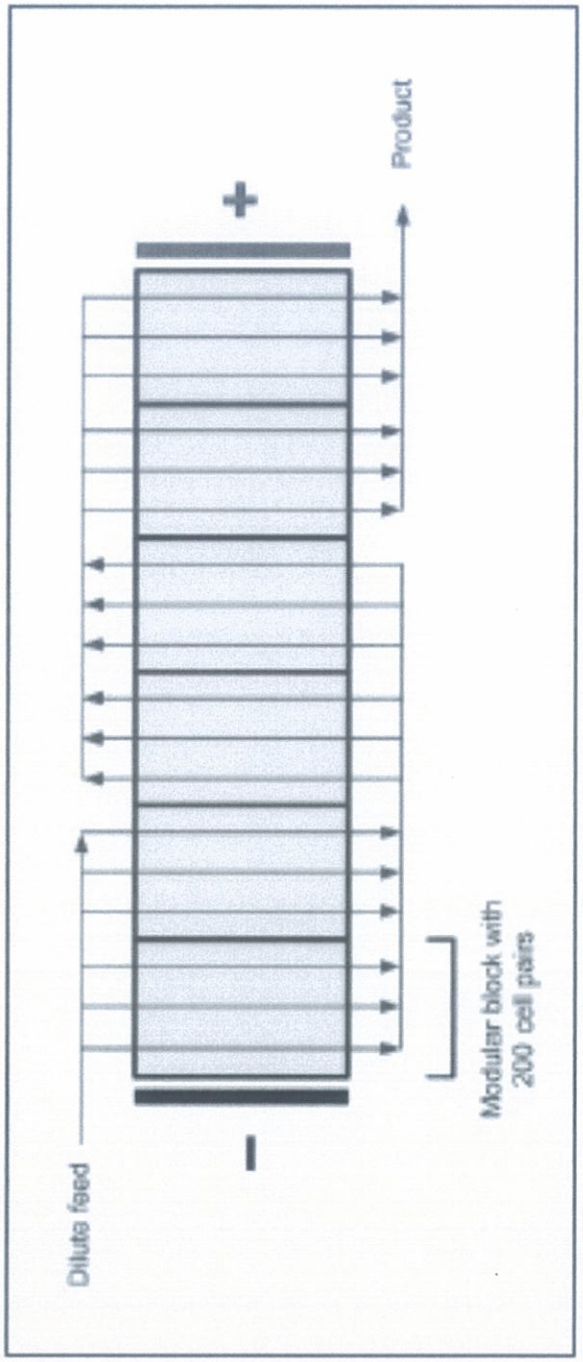

FIG. 13

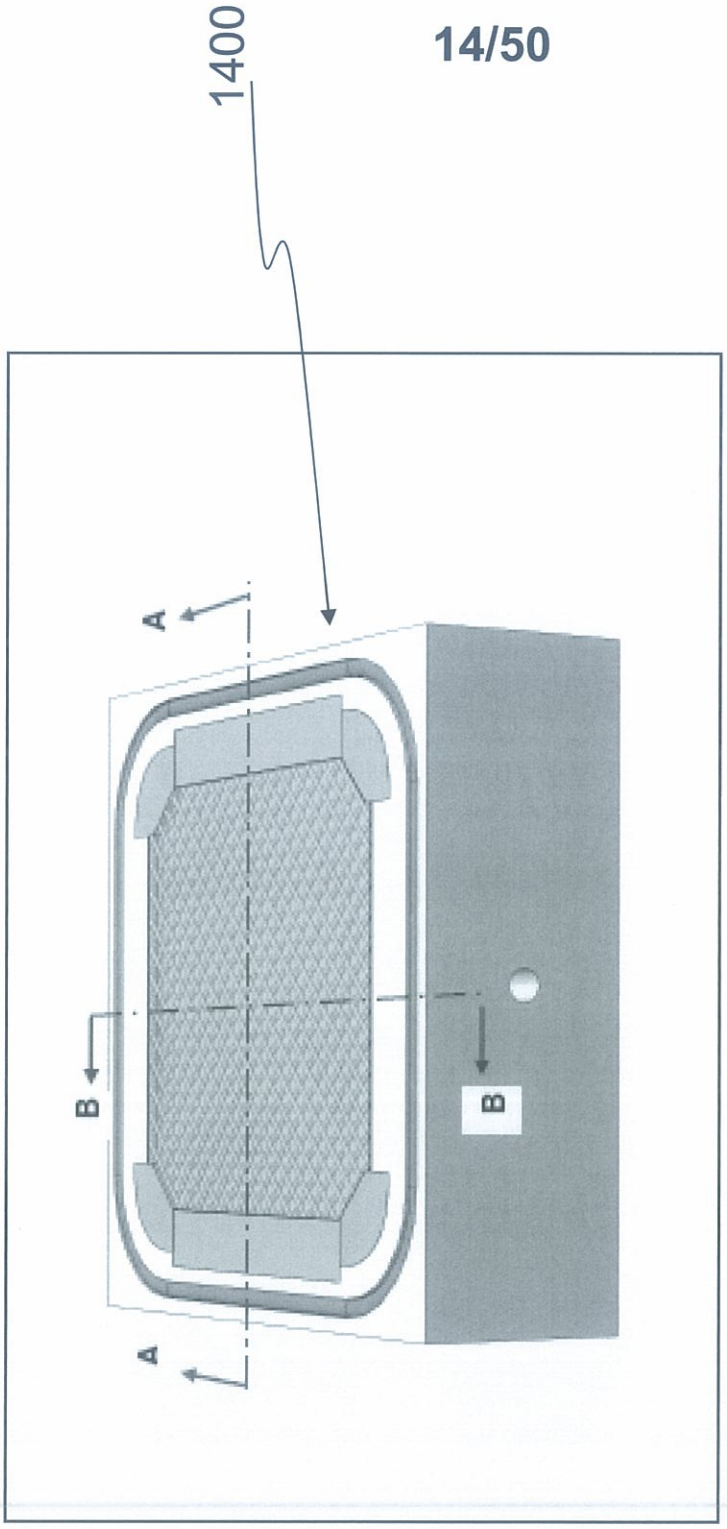

FIG. 14

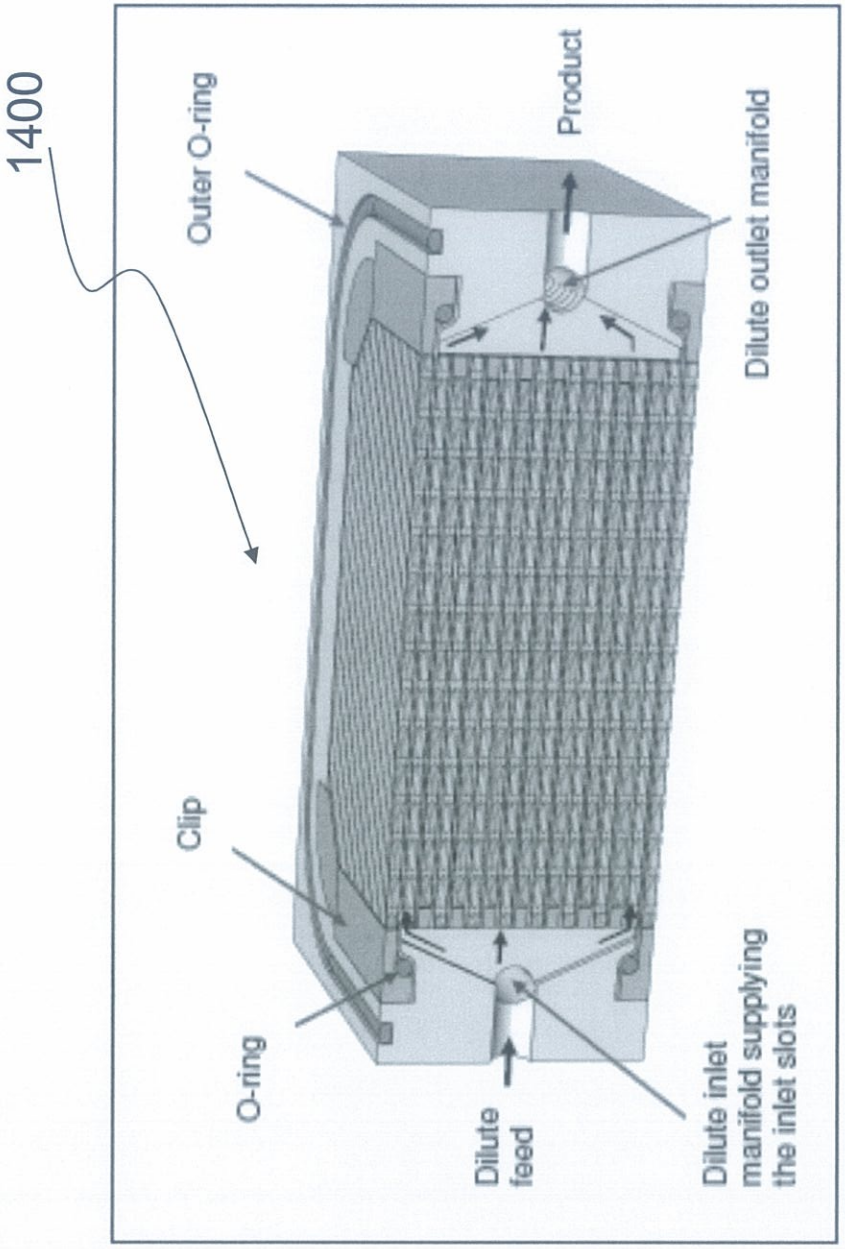
1400
Outer O-ring
Product
Dilute outlet manifold
Clip
O-ring
Dilute feed
Dilute inlet manifold supplying the inlet slots

FIG. 15

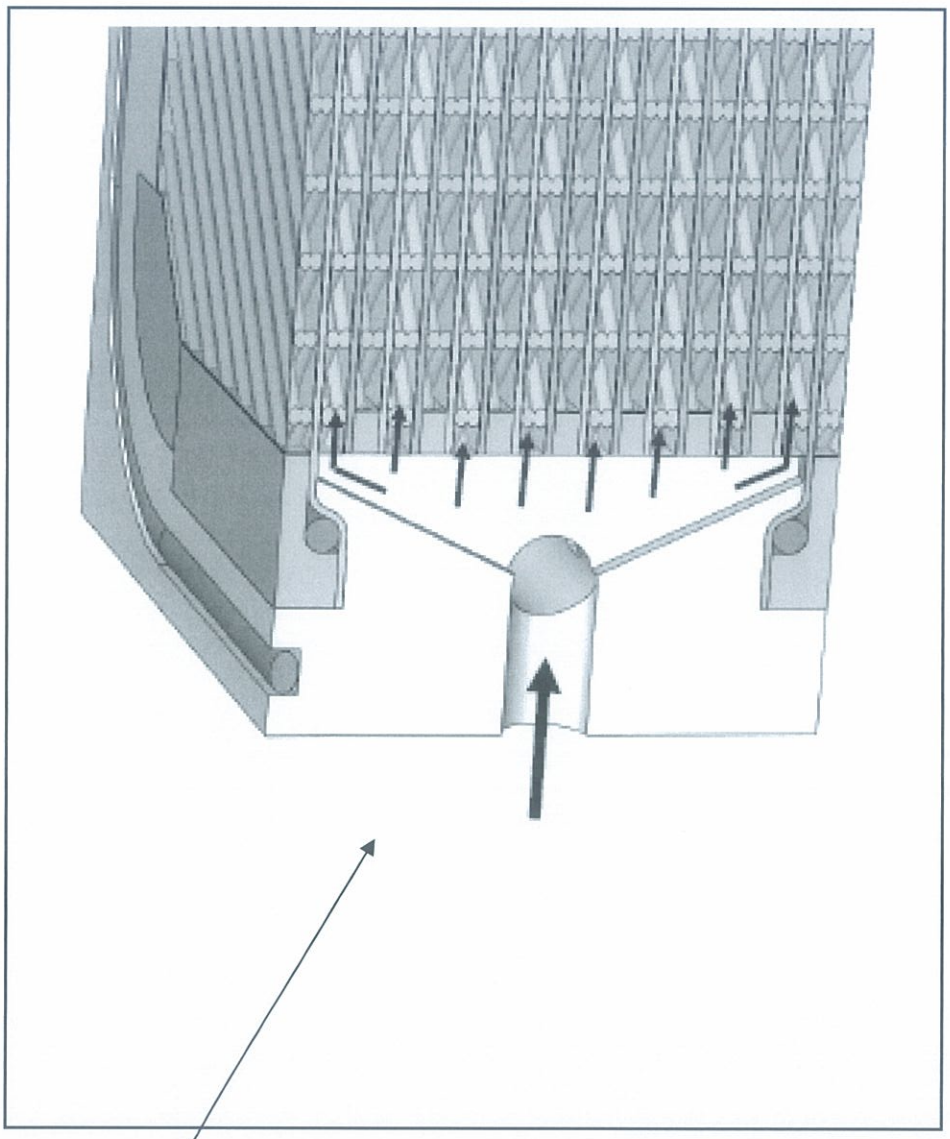

FIG. 16

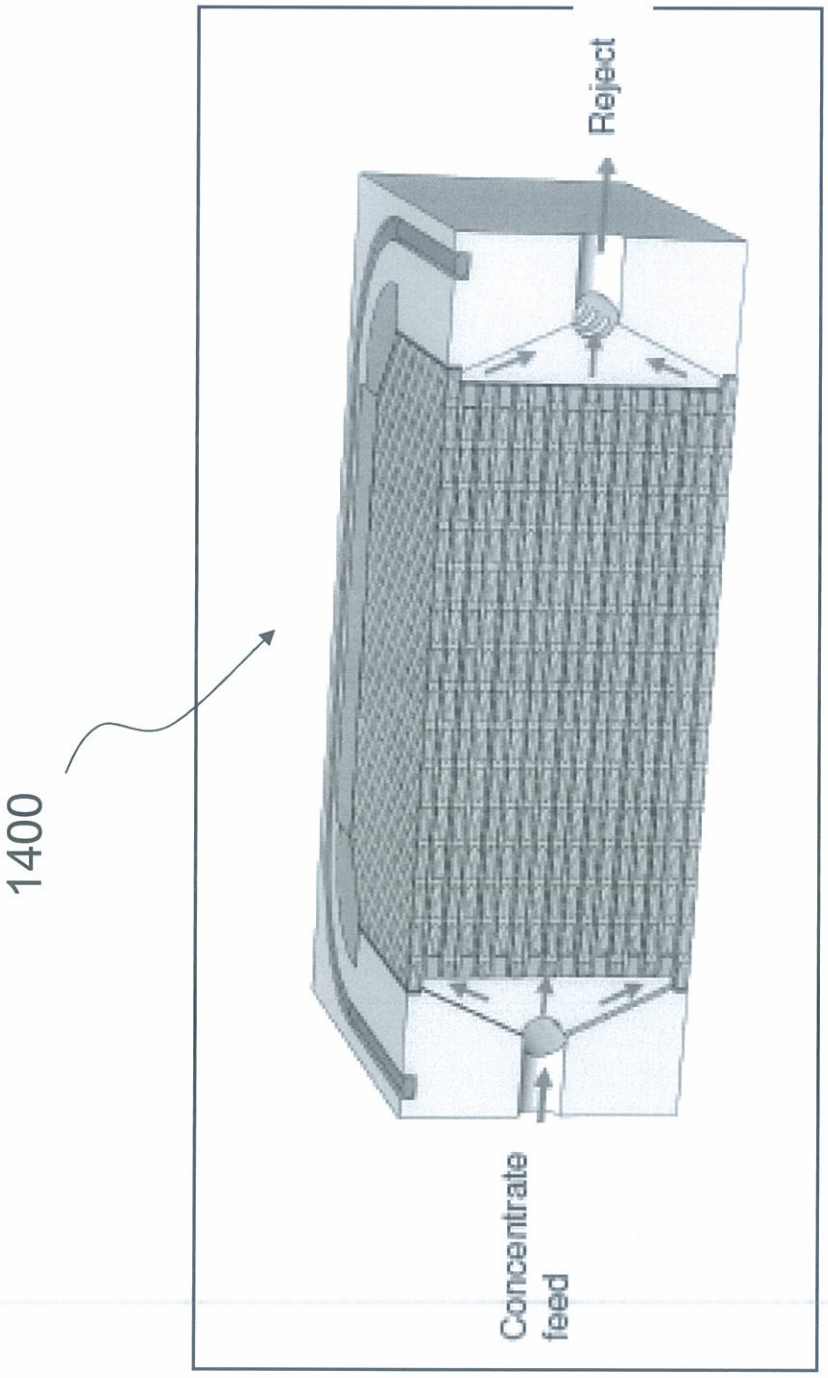

FIG. 17

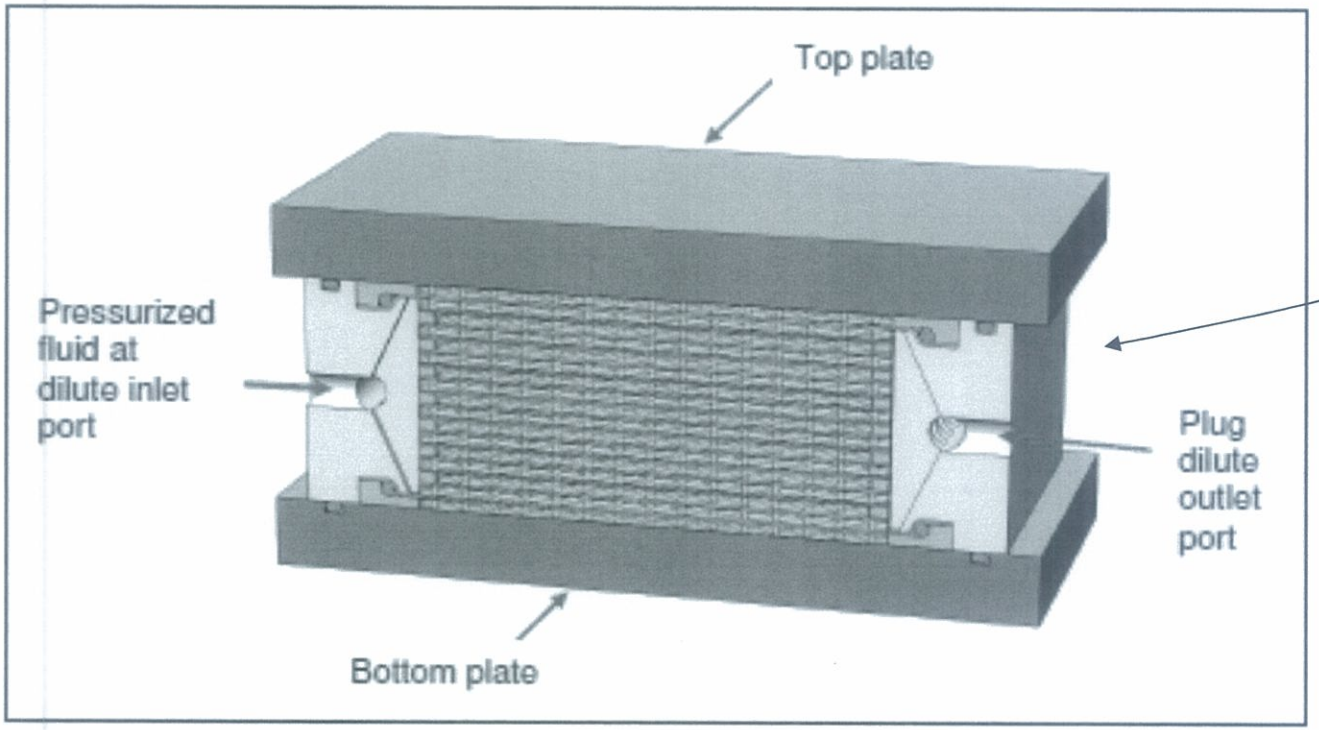
Top plate
1800
Pressurized fluid at dilute inlet port
Plug dilute outlet port
Bottom plate

FIG. 18

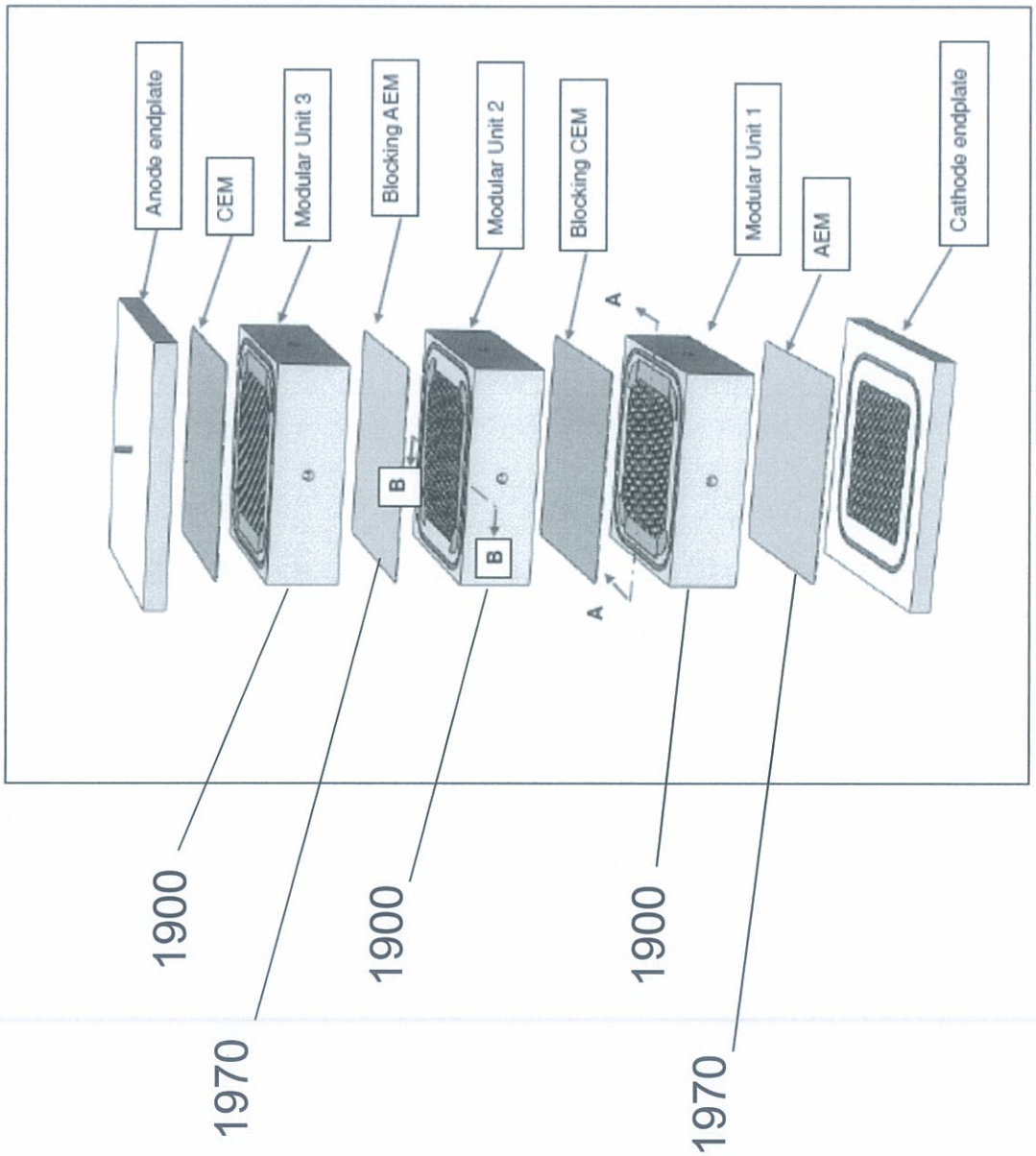
Anode endplate
CEM
Modular Unit 3
Blocking AEM
Modular Unit 2
Blocking CEM
Modular Unit 1
AEM
Cathode endplate
A
A
B
B
1900
1900
1900
1970
1970

FIG. 19

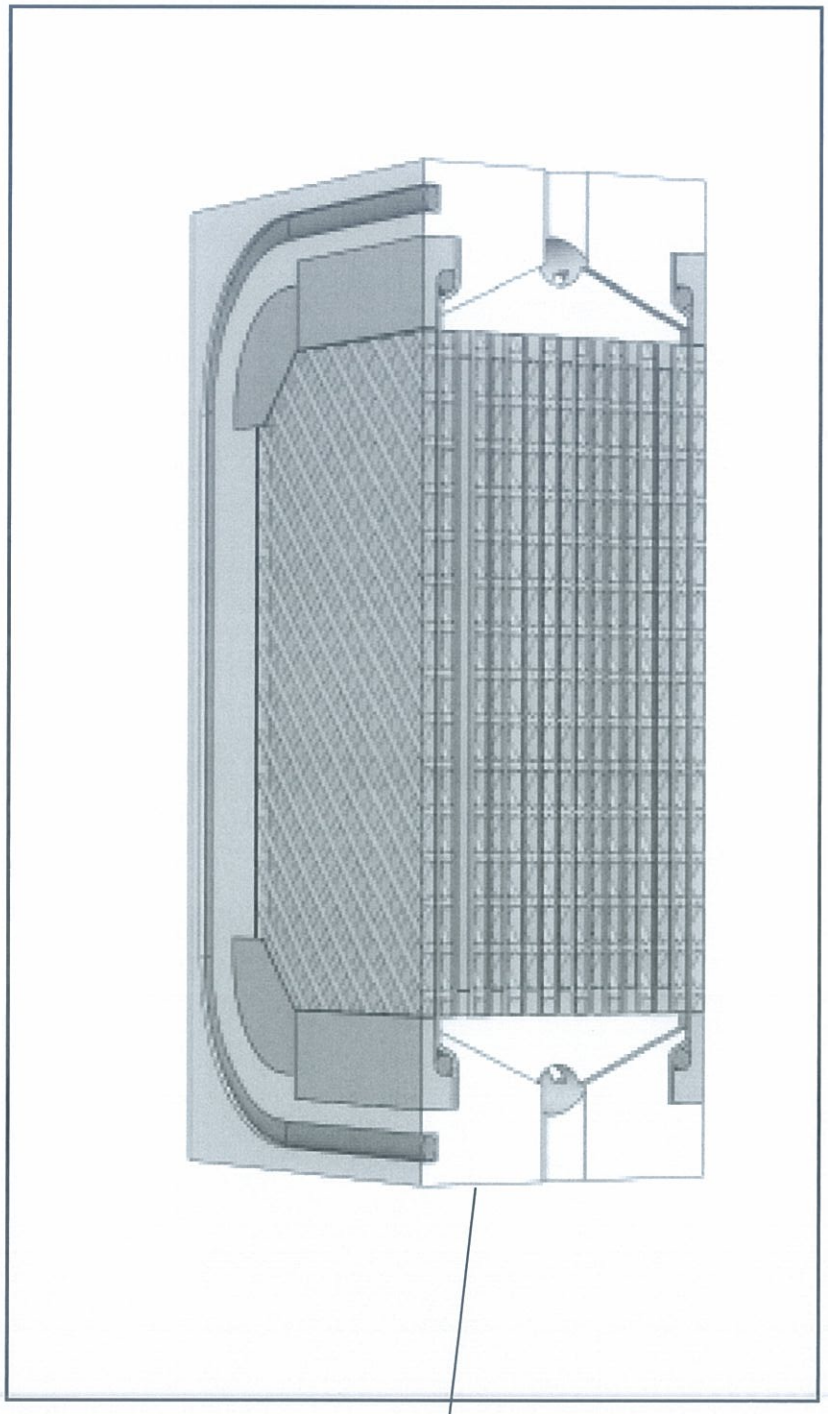

FIG. 20

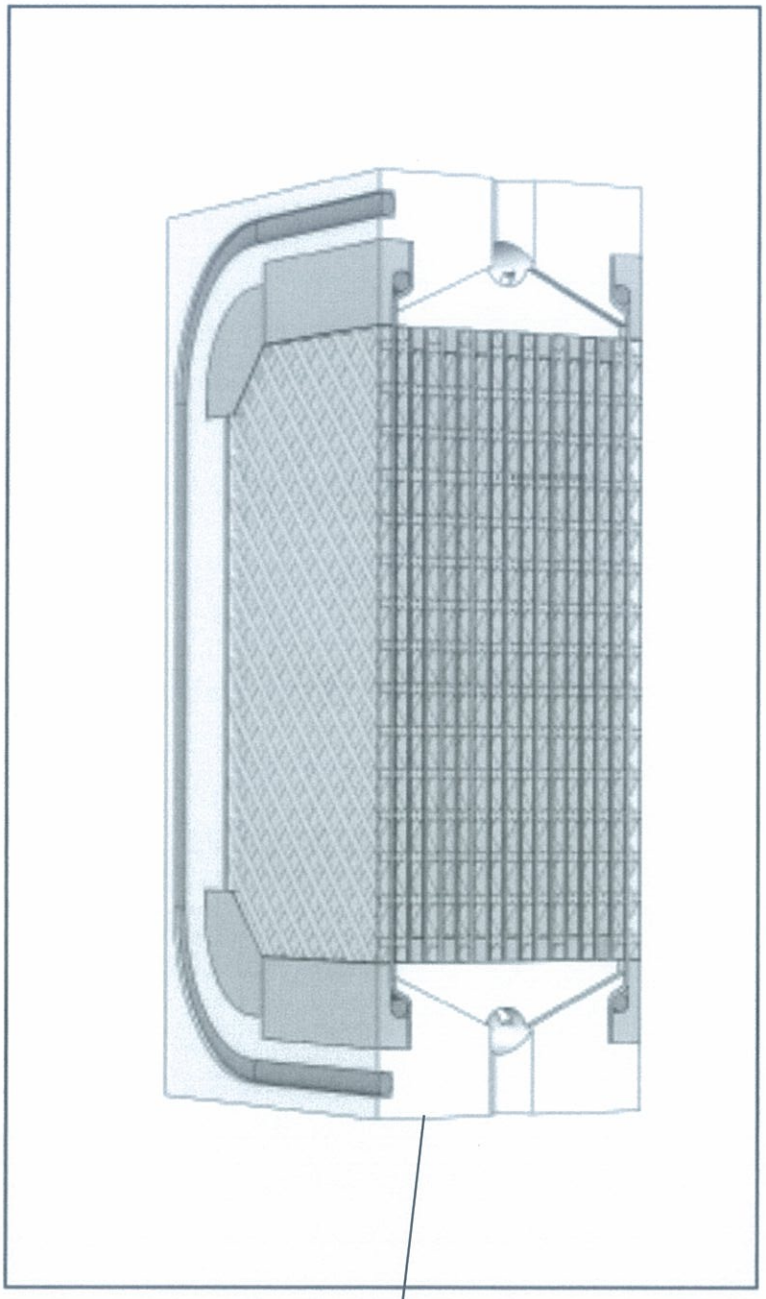

FIG. 21

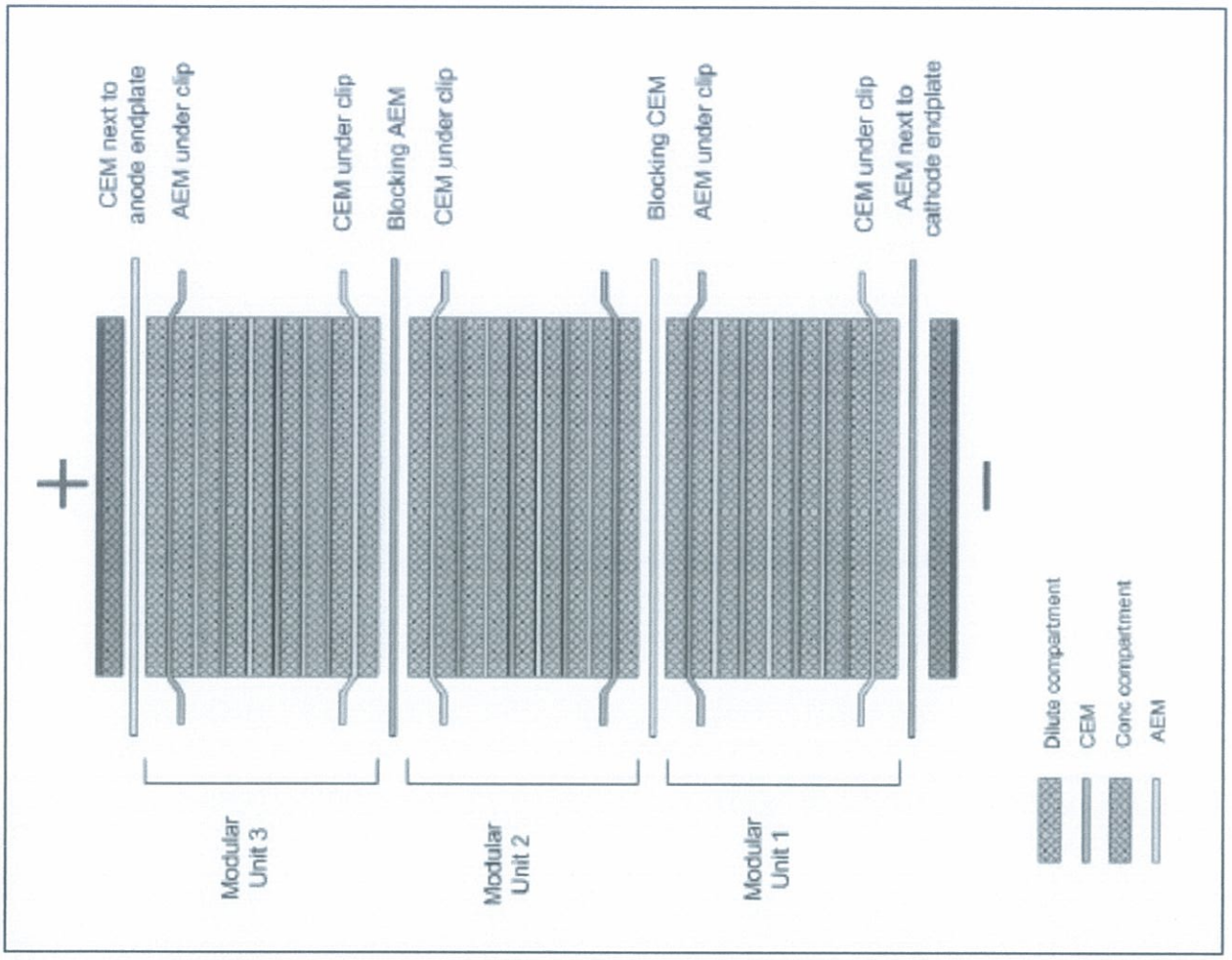
CEM next to anode endplate
AEM under clip
CEM under clip
Blocking AEM
CEM under clip
Blocking CEM
AEM under clip
CEM under clip
AEM next to cathode endplate
+
−
Modular Unit 3
Modular Unit 2
Modular Unit 1
Dilute compartment
CEM
Conc compartment
AEM

FIG. 22

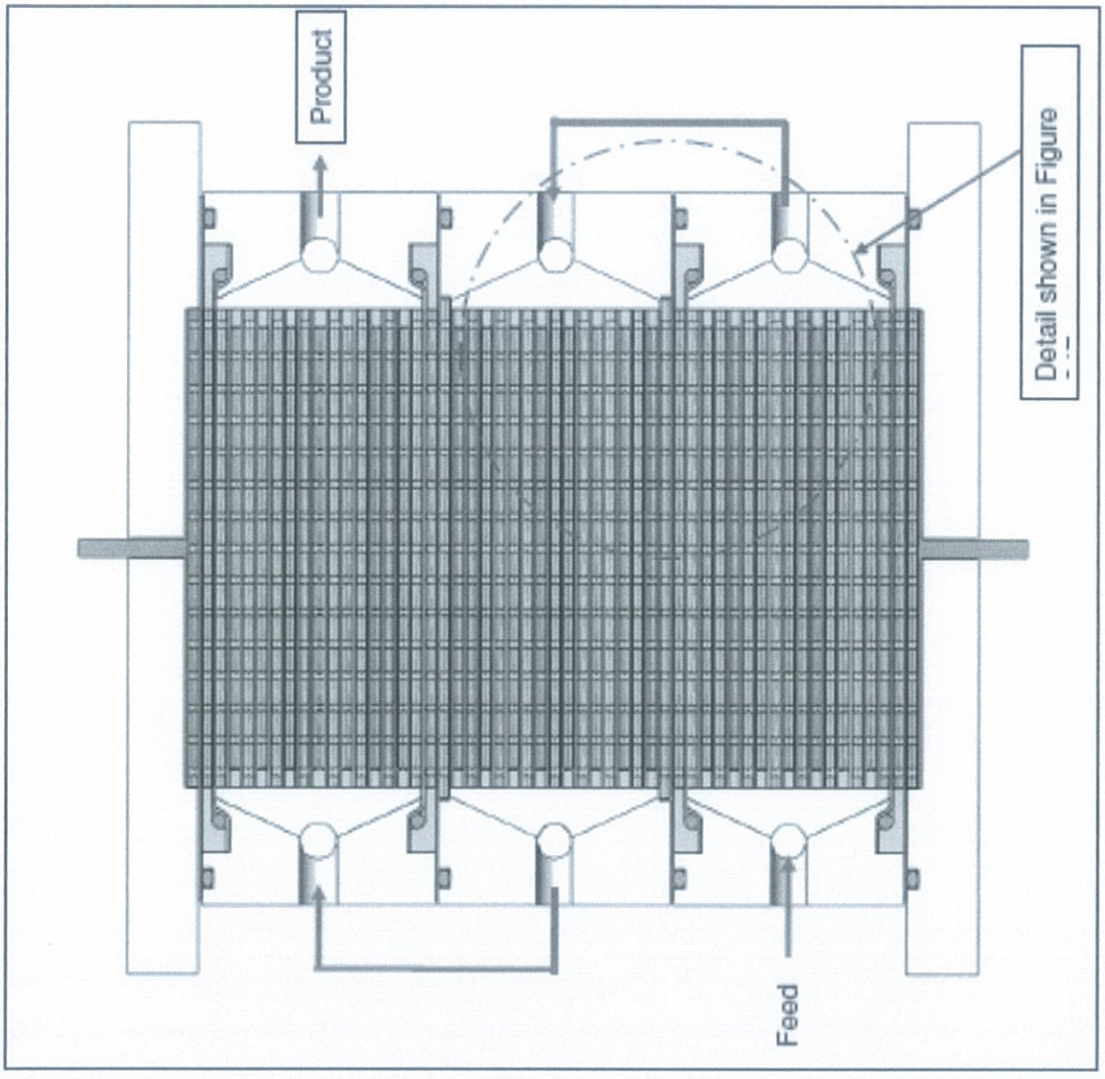

FIG. 23

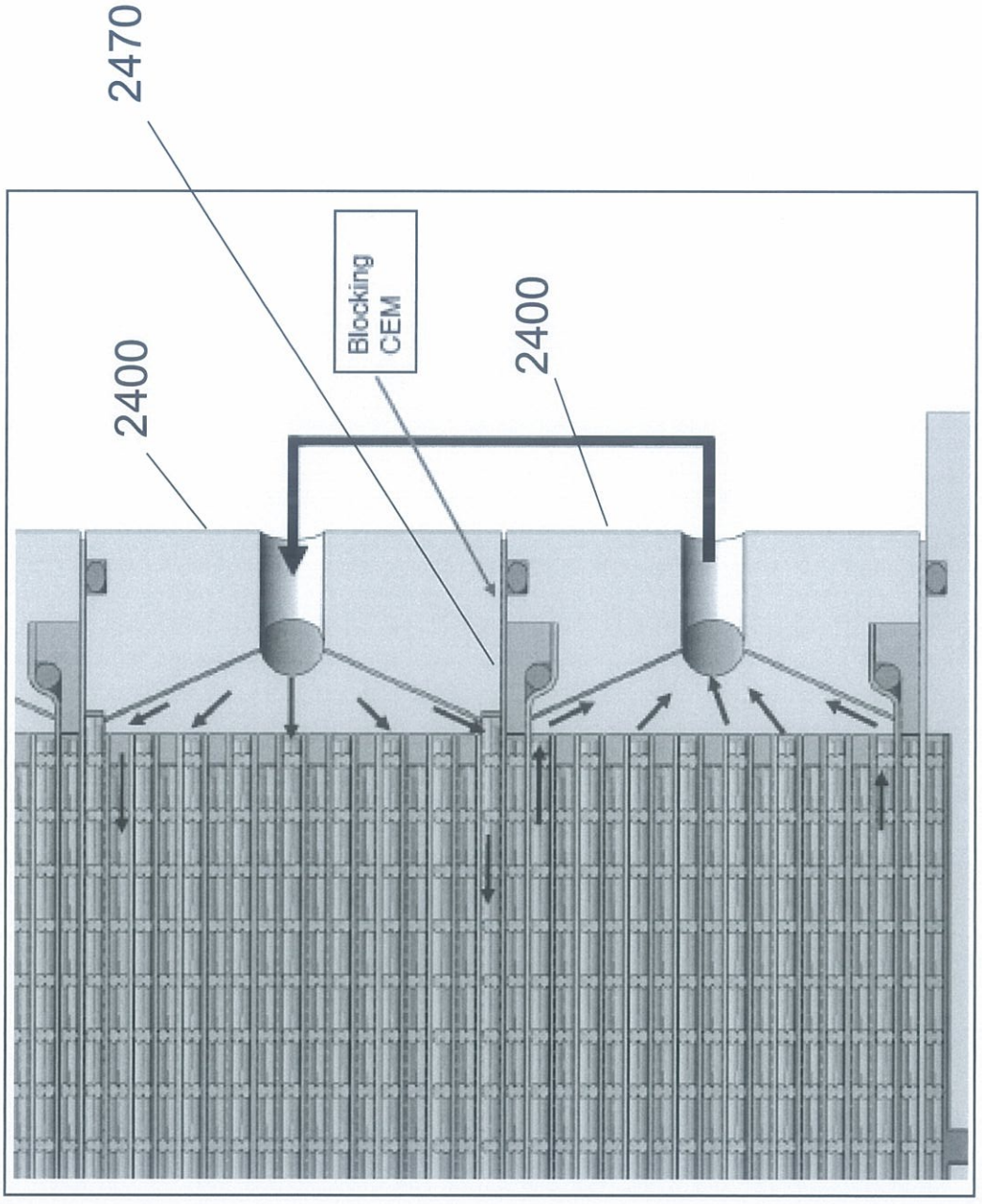

FIG. 24

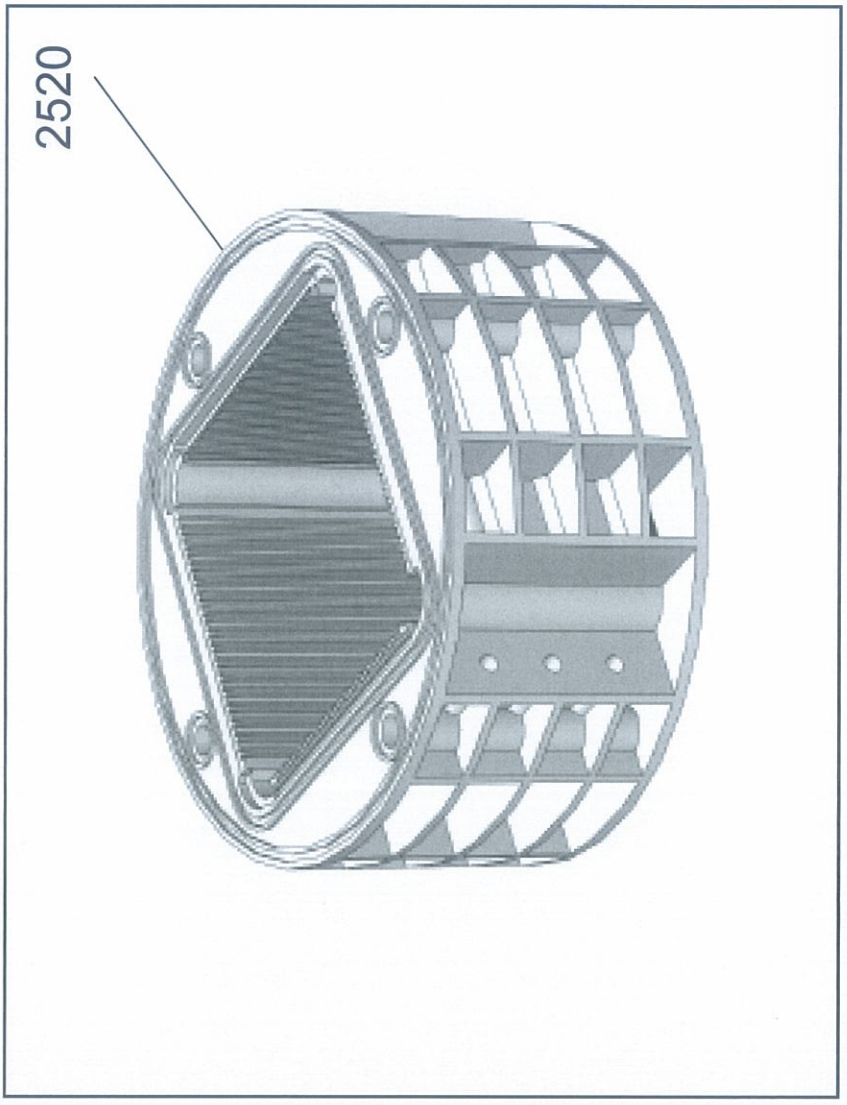

FIG. 25



FIG. 26



FIG. 27

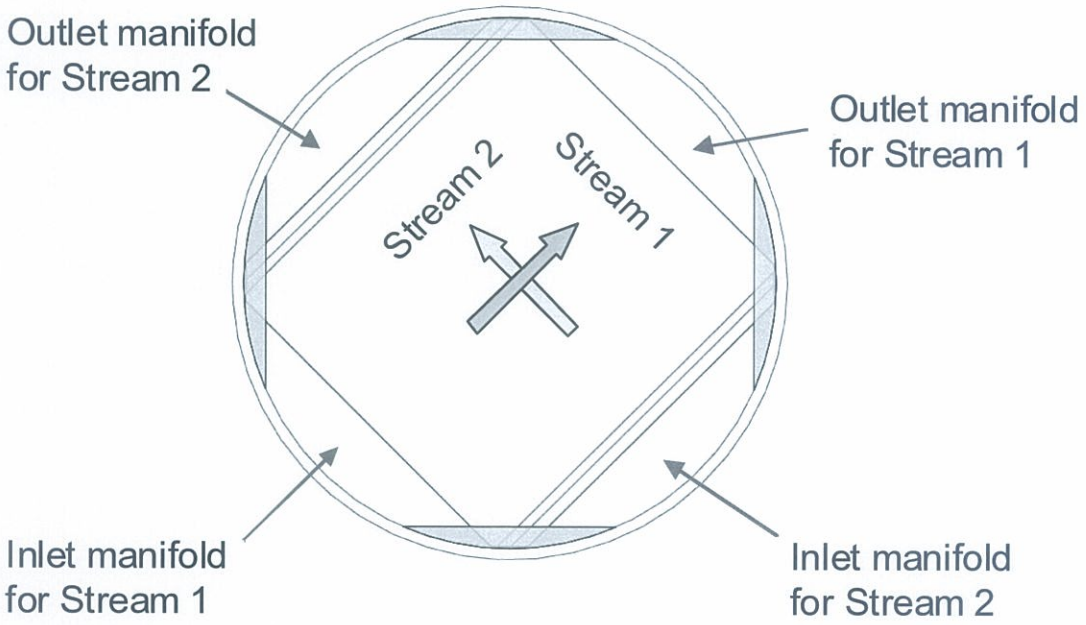
Outlet manifold
for Stream 2
Outlet manifold
for Stream 1
Stream 2
Stream 1
Inlet manifold
for Stream 1
Inlet manifold
for Stream 2
Section view

FIG. 28

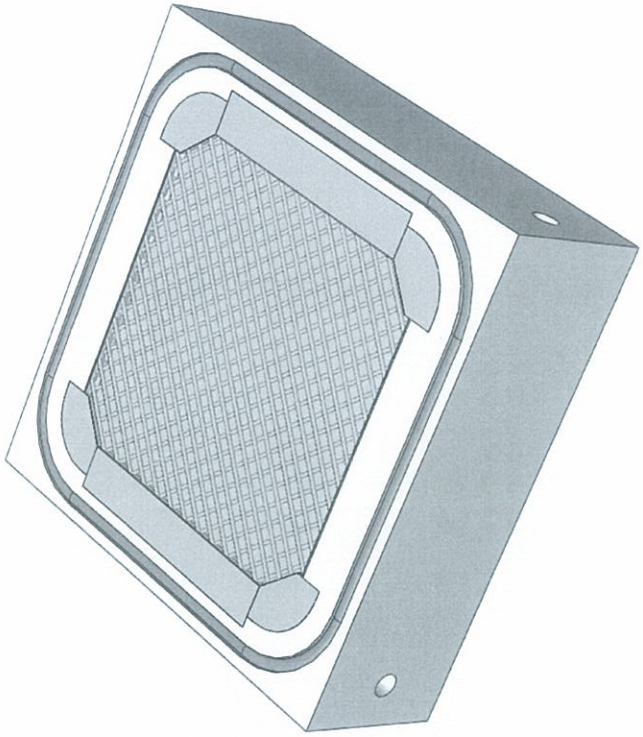

FIG. 29

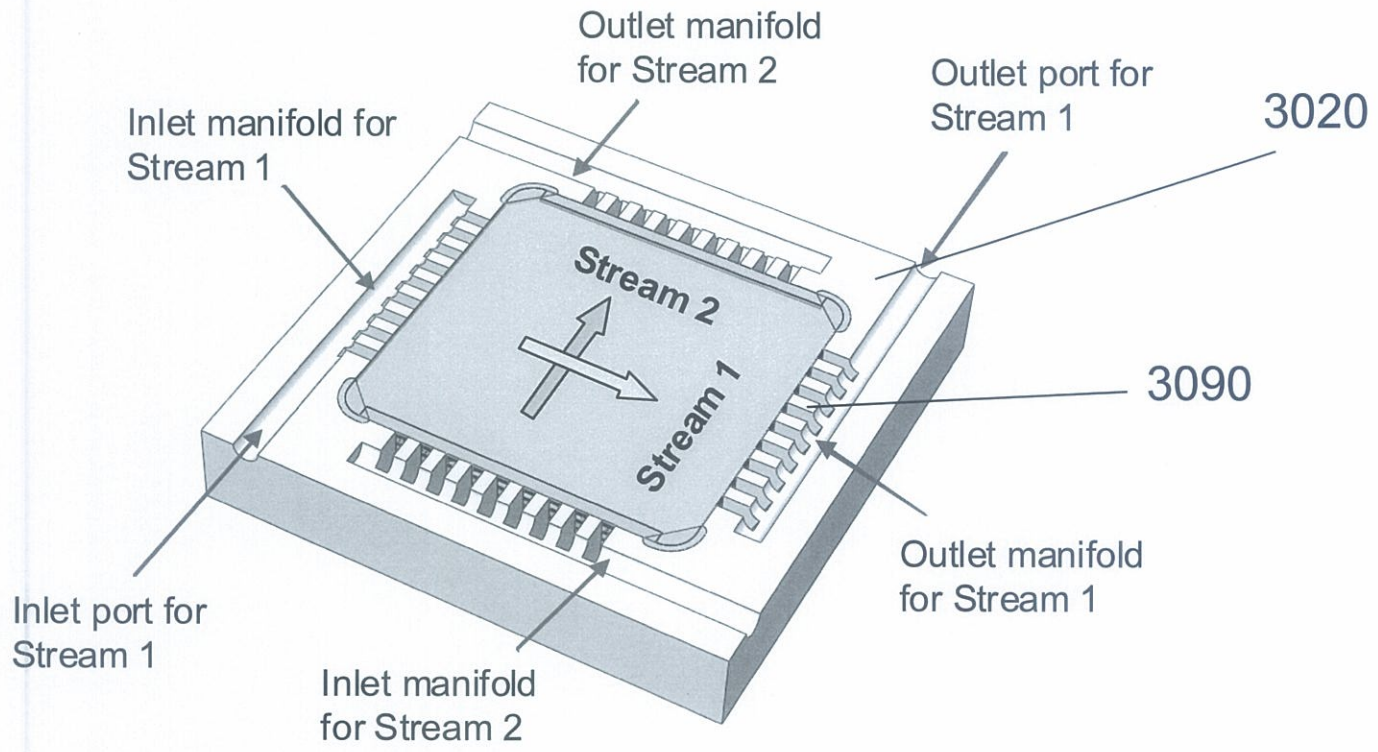

Section view

FIG. 30

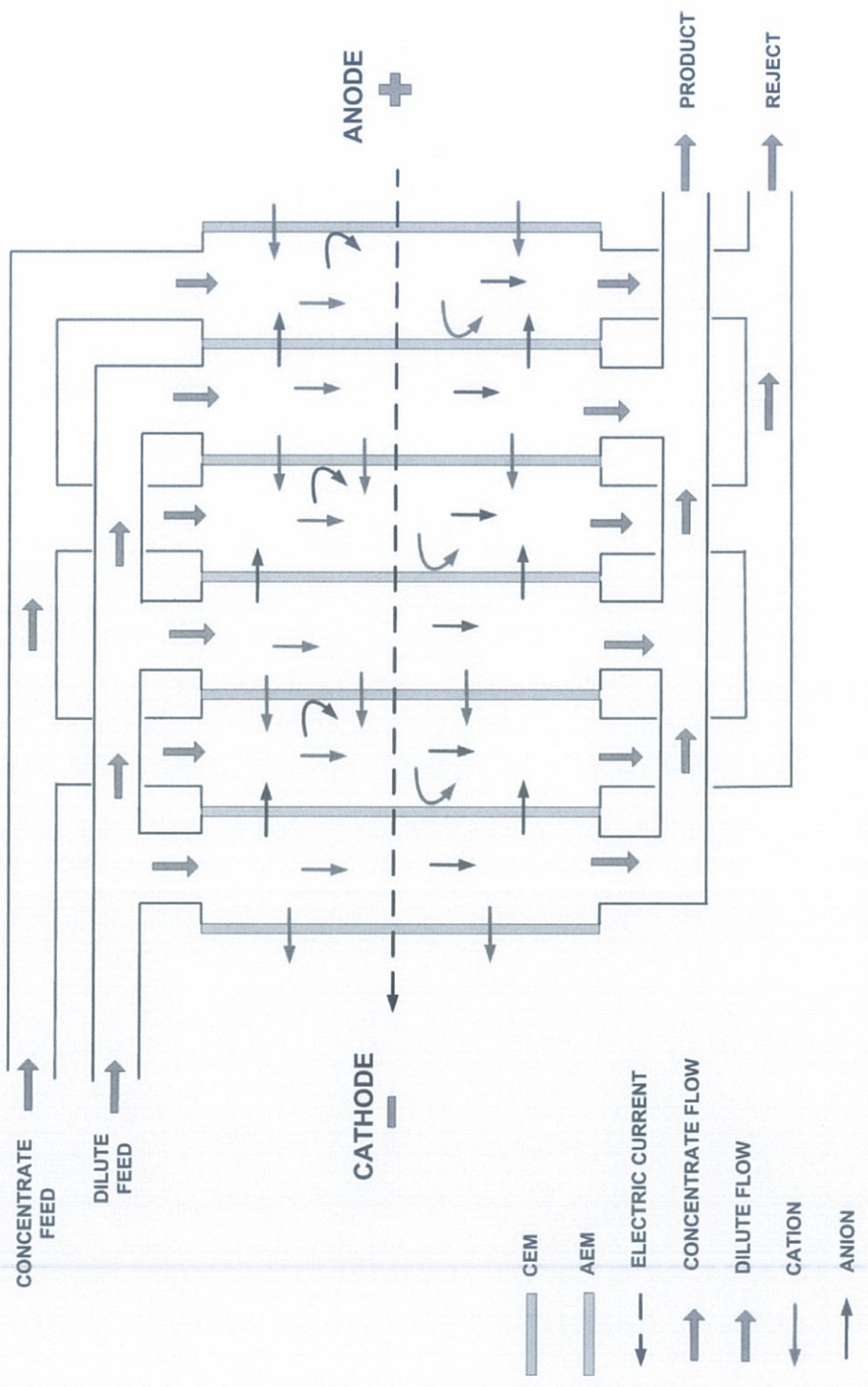
ANODE
+
PRODUCT
REJECT
CONCENTRATE FEED
DILUTE FEED
CATHODE
−
CEM
AEM
ELECTRIC CURRENT
CONCENTRATE FLOW
DILUTE FLOW
CATION
ANION

FIG. 31

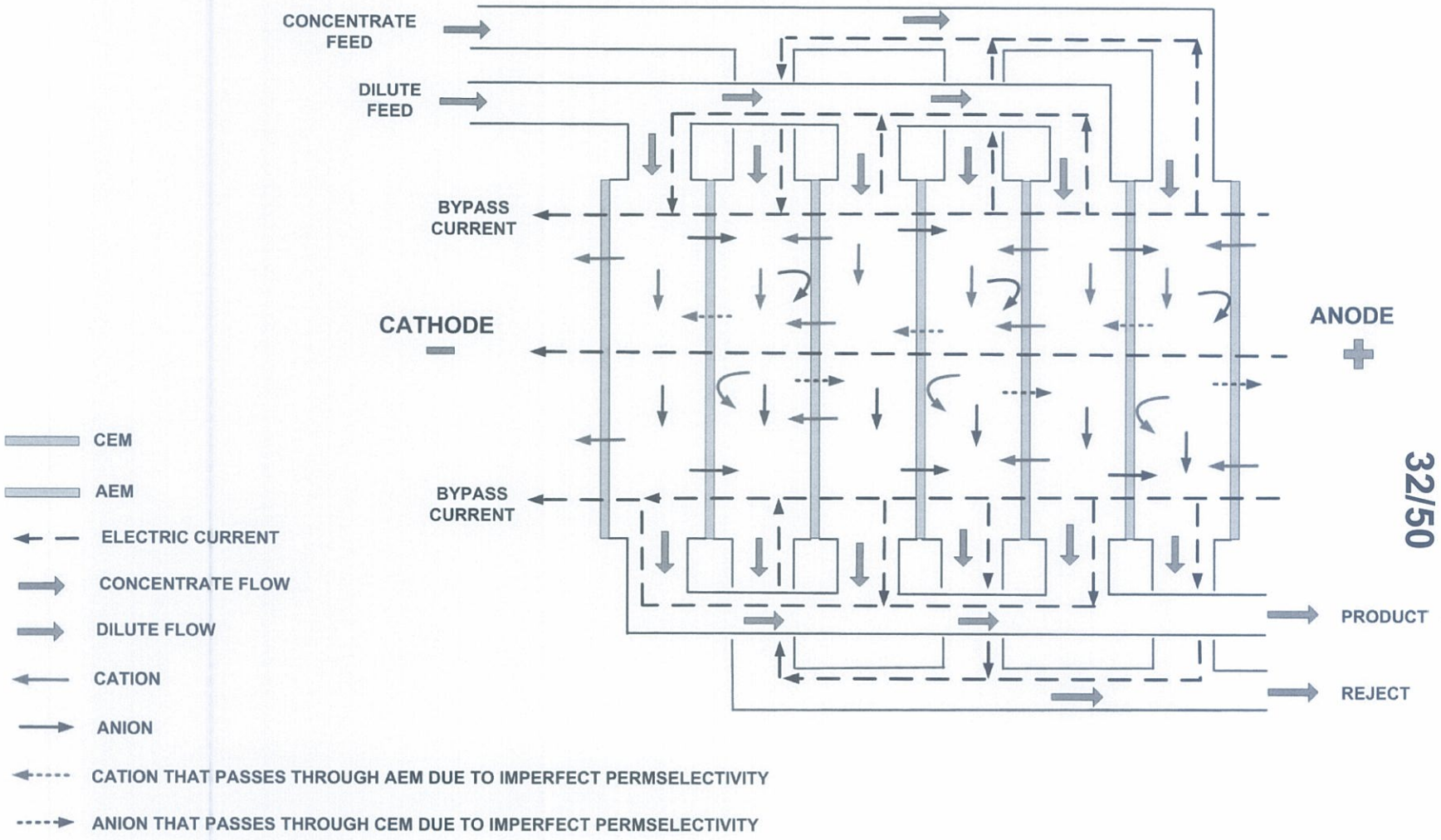
CONCENTRATE FEED
DILUTE FEED
BYPASS CURRENT
CATHODE
ANODE
BYPASS CURRENT
PRODUCT
REJECT
CEM
AEM
ELECTRIC CURRENT
CONCENTRATE FLOW
DILUTE FLOW
CATION
ANION
CATION THAT PASSES THROUGH AEM DUE TO IMPERFECT PERMSELECTIVITY
ANION THAT PASSES THROUGH CEM DUE TO IMPERFECT PERMSELECTIVITY

FIG. 32

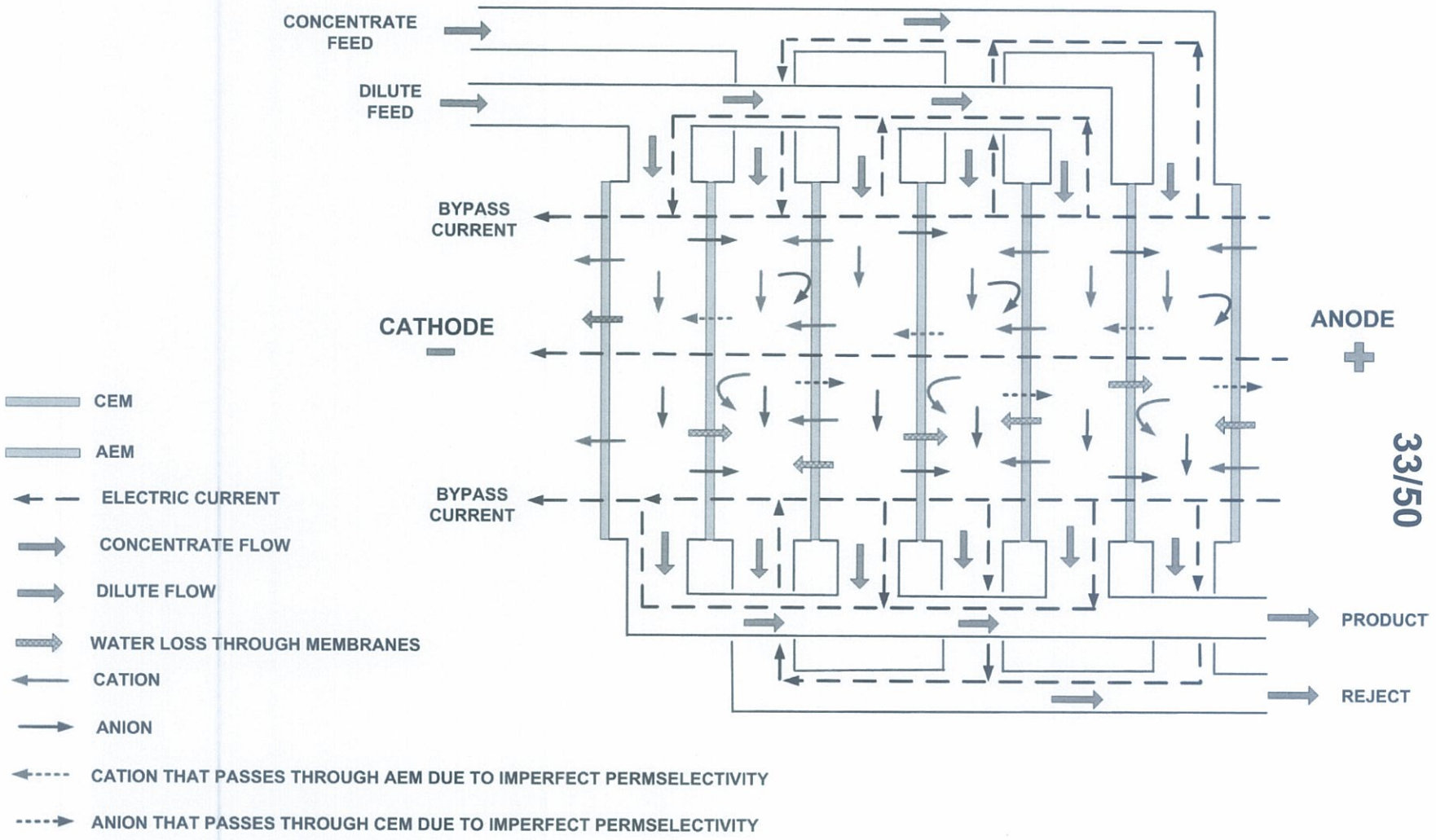
CONCENTRATE FEED
DILUTE FEED
BYPASS CURRENT
CATHODE
ANODE
BYPASS CURRENT
PRODUCT
REJECT
CEM
AEM
ELECTRIC CURRENT
CONCENTRATE FLOW
DILUTE FLOW
WATER LOSS THROUGH MEMBRANES
CATION
ANION
CATION THAT PASSES THROUGH AEM DUE TO IMPERFECT PERMSELECTIVITY
ANION THAT PASSES THROUGH CEM DUE TO IMPERFECT PERMSELECTIVITY

FIG. 33

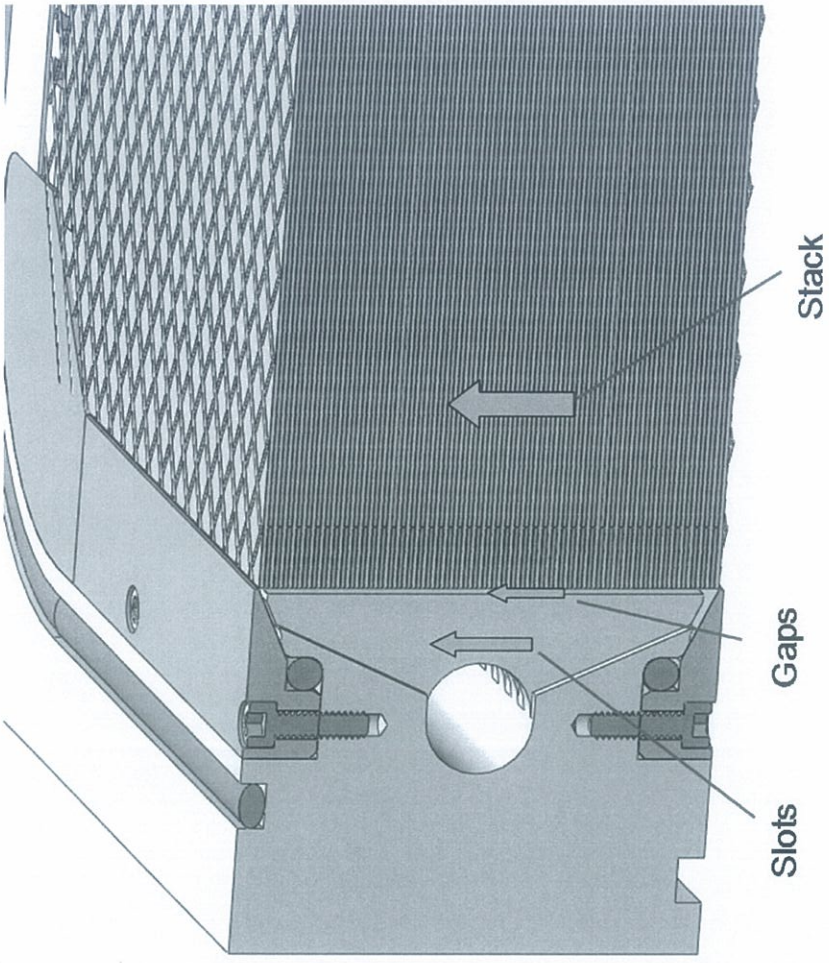

FIG. 34

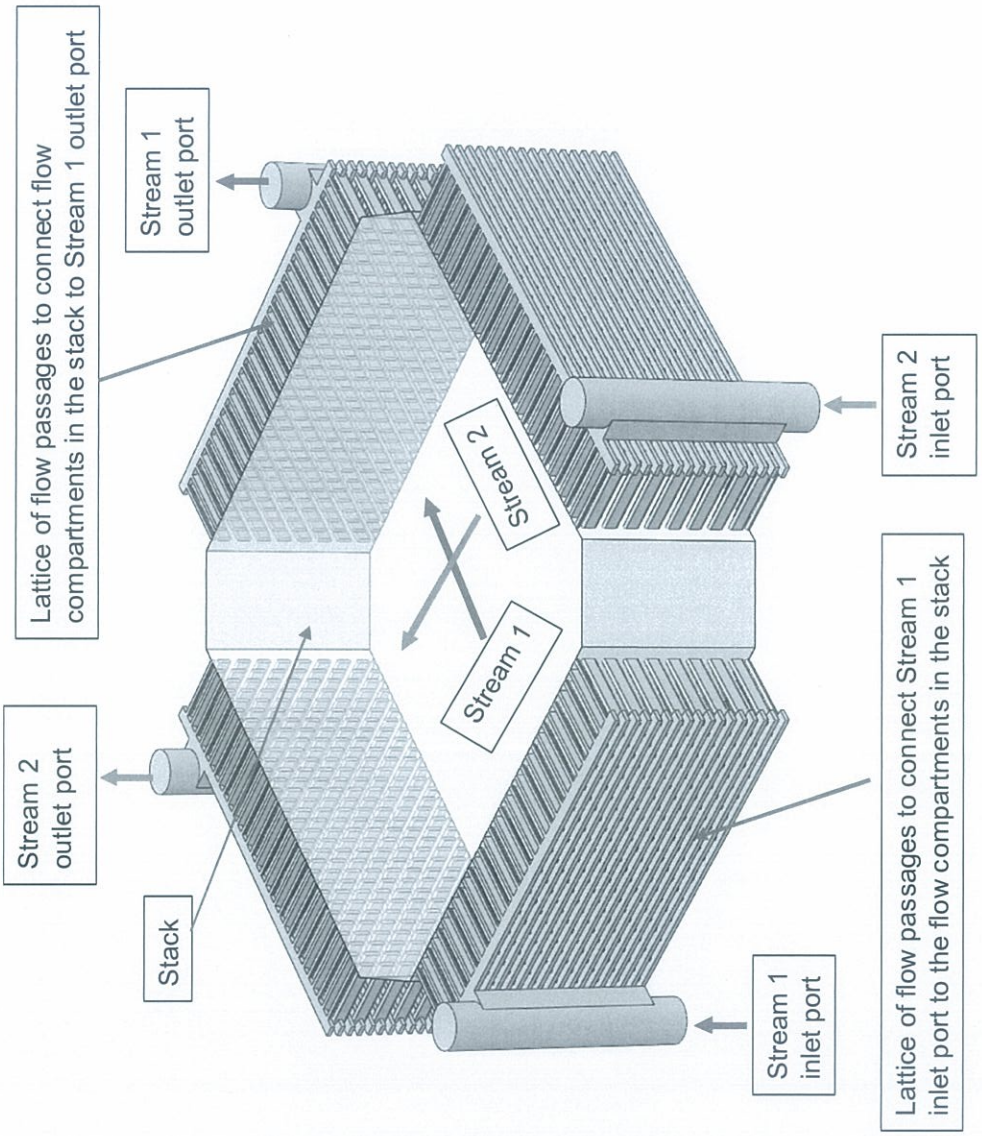
Lattice of flow passages to connect flow compartments in the stack to Stream 1 outlet port
Stream 1 outlet port
Stream 2 outlet port
Stack
Stream 2
Stream 1
Stream 2 inlet port
Stream 1 inlet port
Lattice of flow passages to connect Stream 1 inlet port to the flow compartments in the stack

FIG. 35

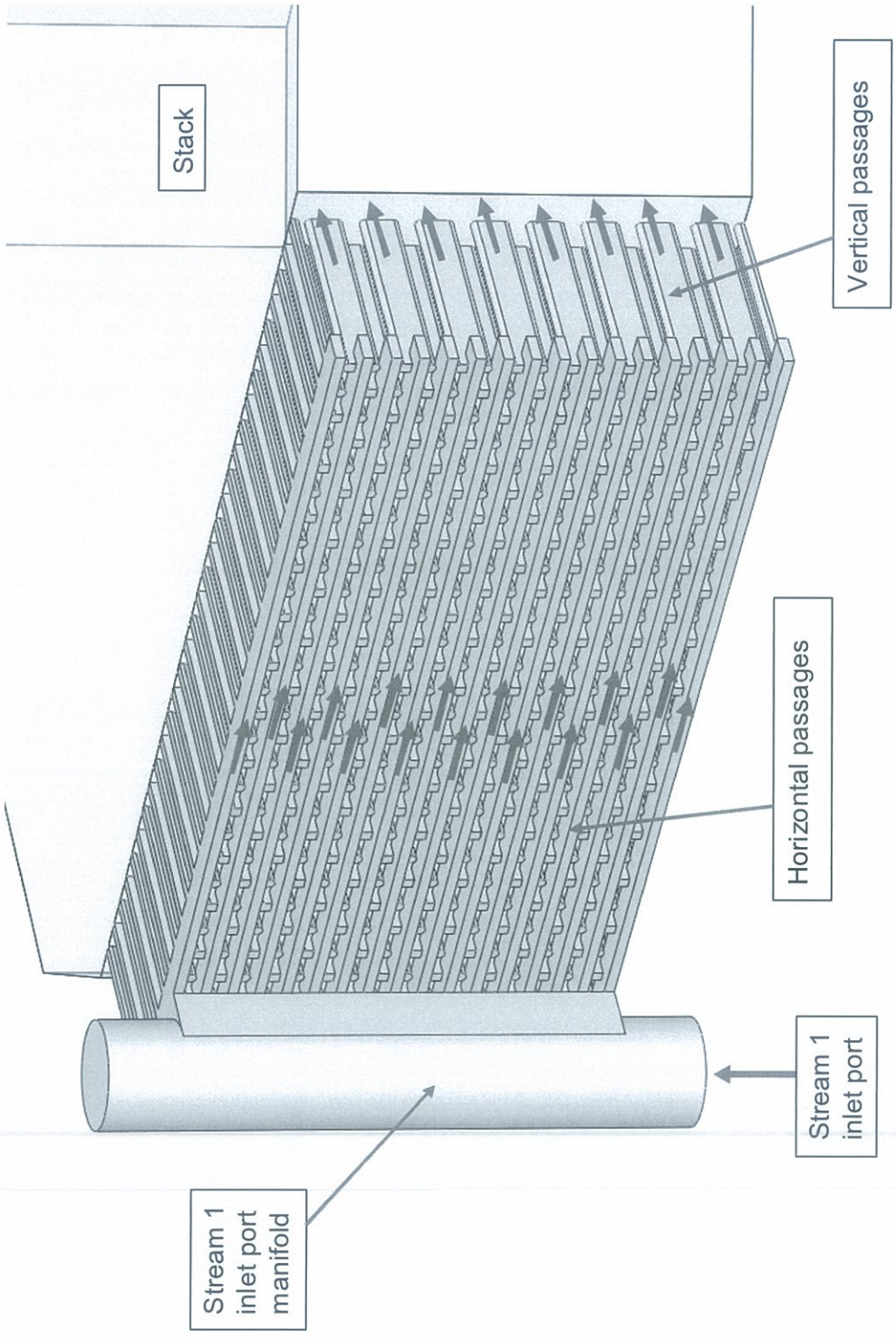
Stack
Vertical passages
Horizontal passages
Stream 1 inlet port
Stream 1 inlet port manifold

FIG. 36

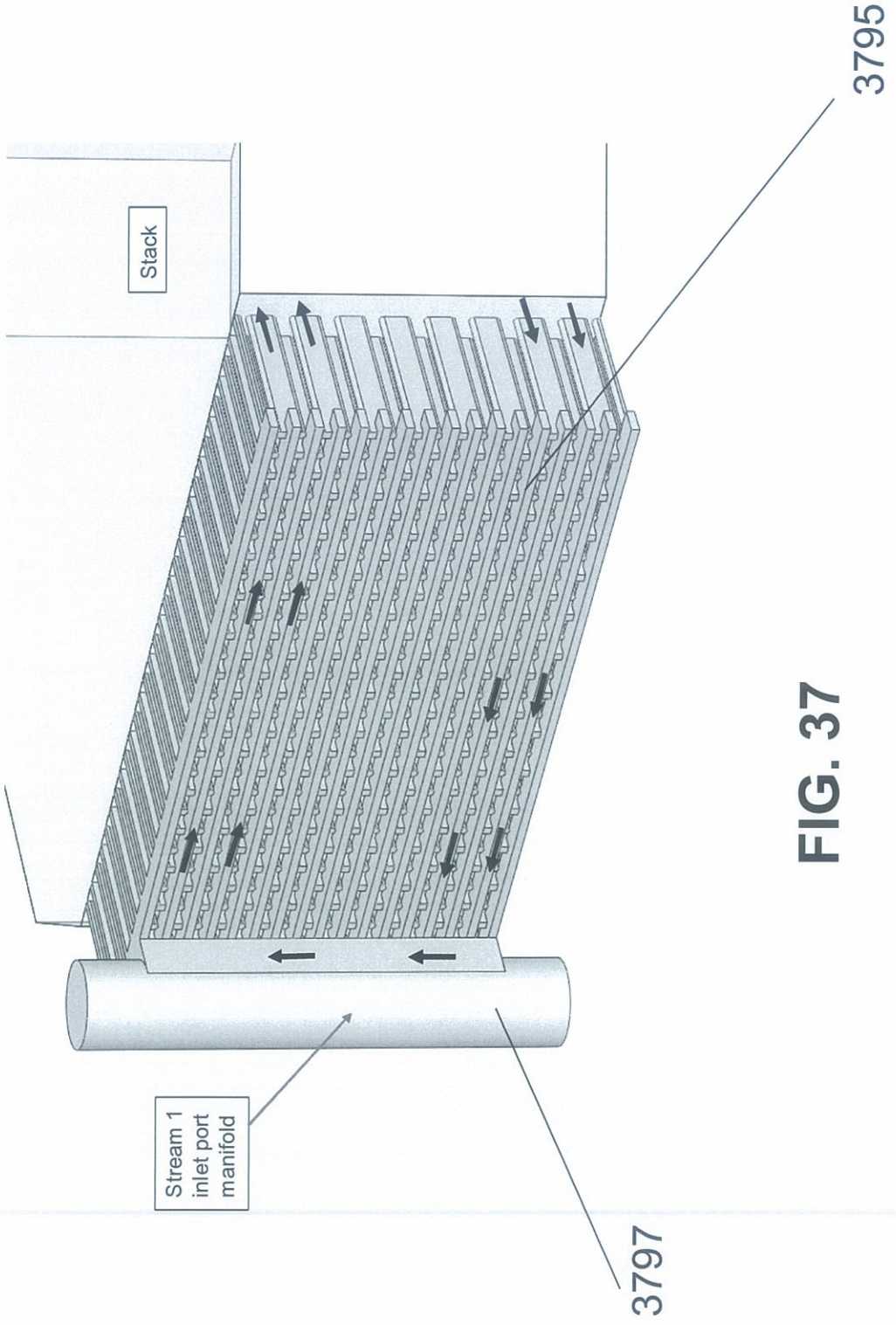

FIG. 37

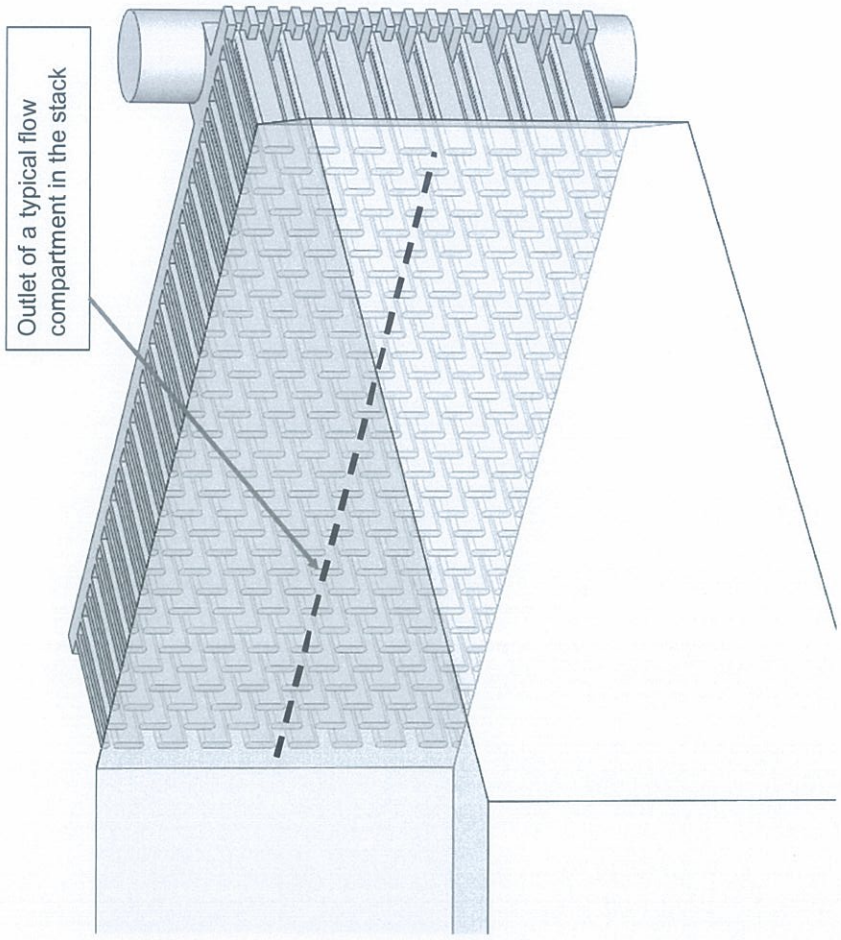

FIG. 38

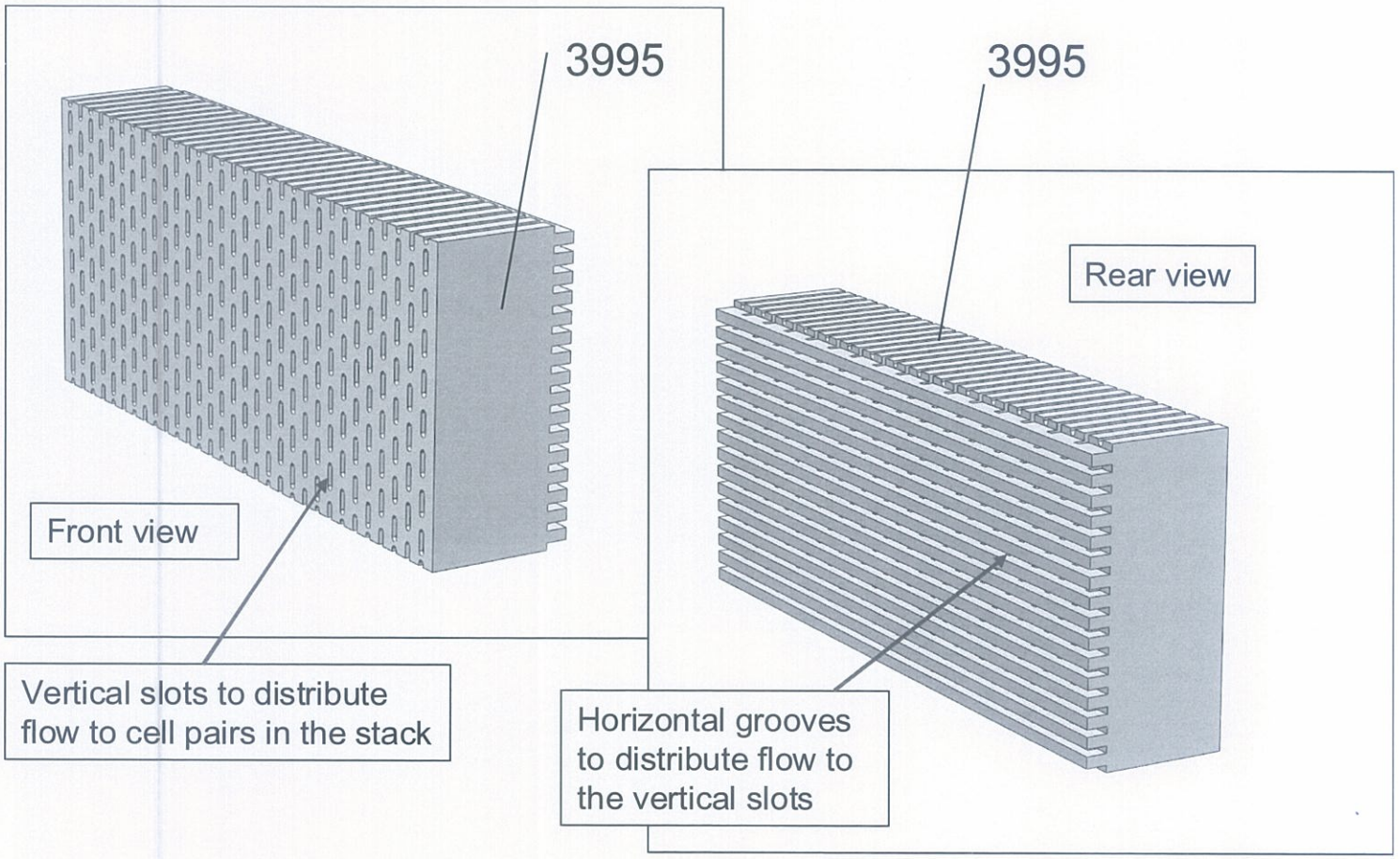
3995
3995
Front view
Rear view
Vertical slots to distribute flow to cell pairs in the stack
Horizontal grooves to distribute flow to the vertical slots

FIG. 39

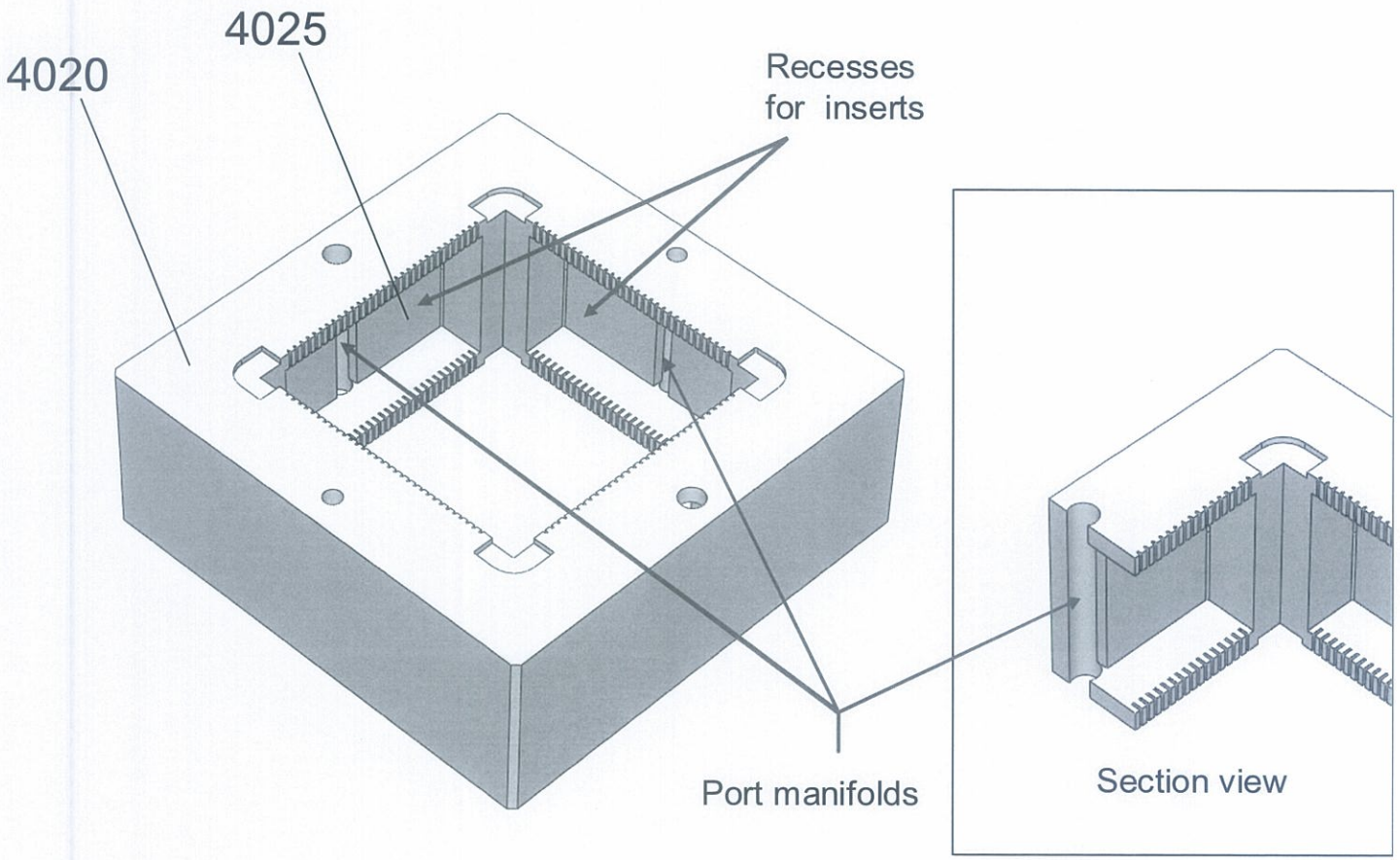
4020
4025
Recesses
for inserts
Port manifolds
Section view

FIG. 40

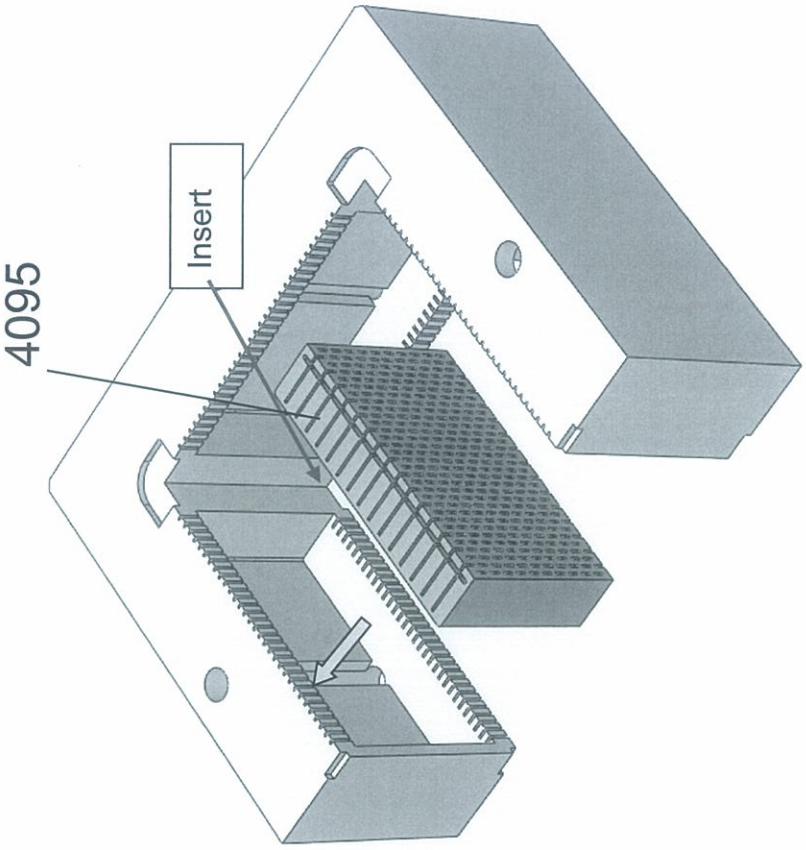

FIG. 41

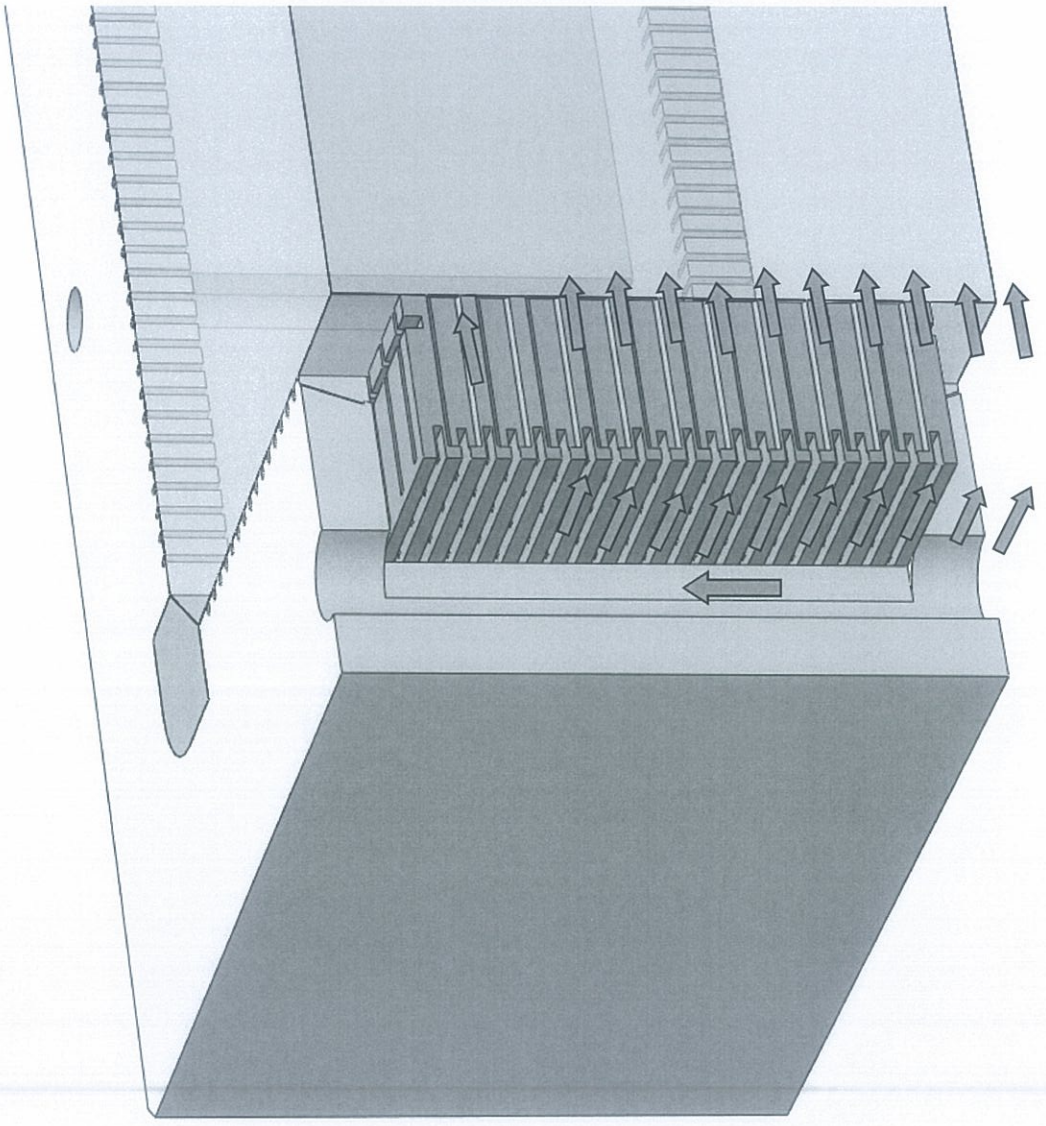

FIG. 42

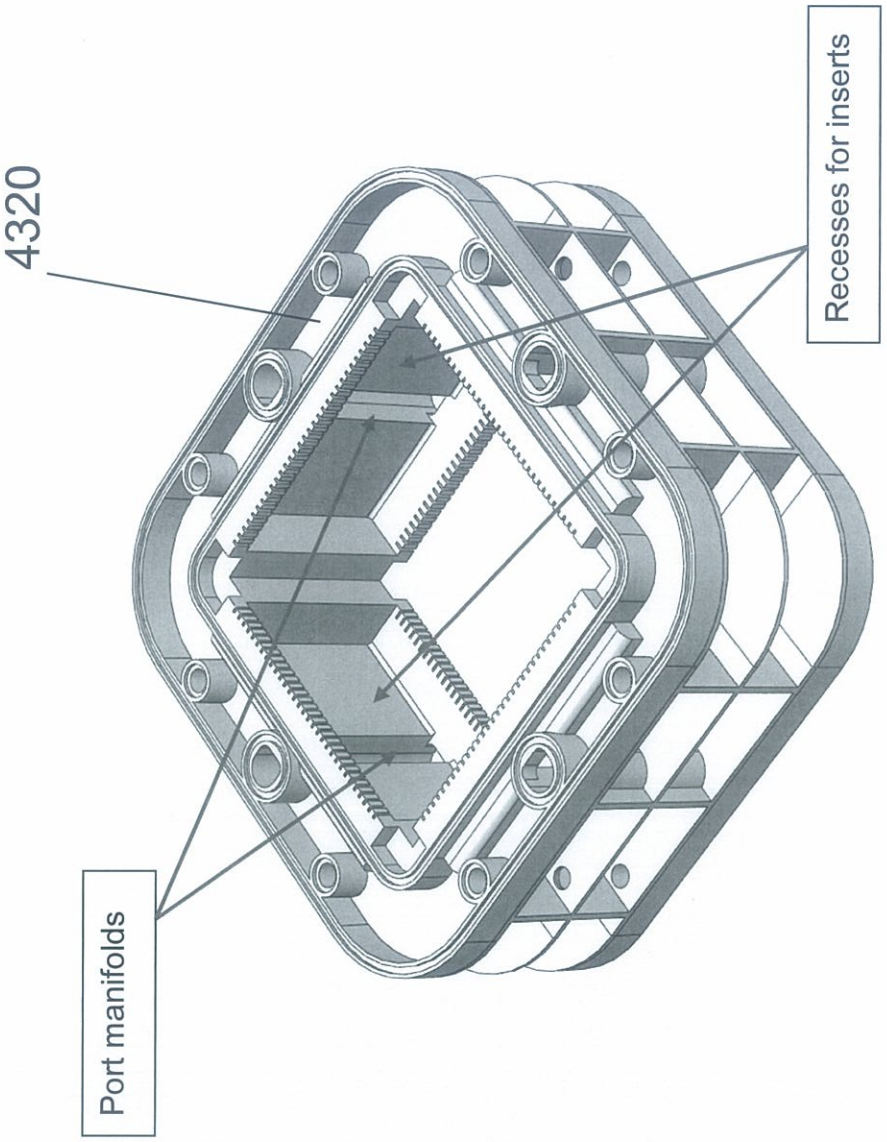

FIG. 43

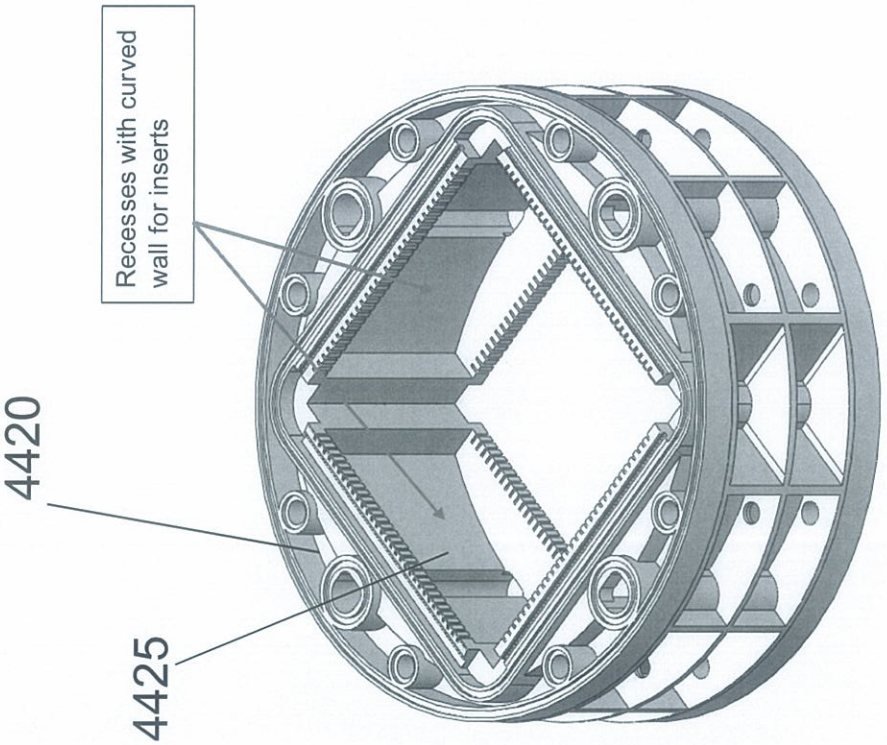

FIG. 44

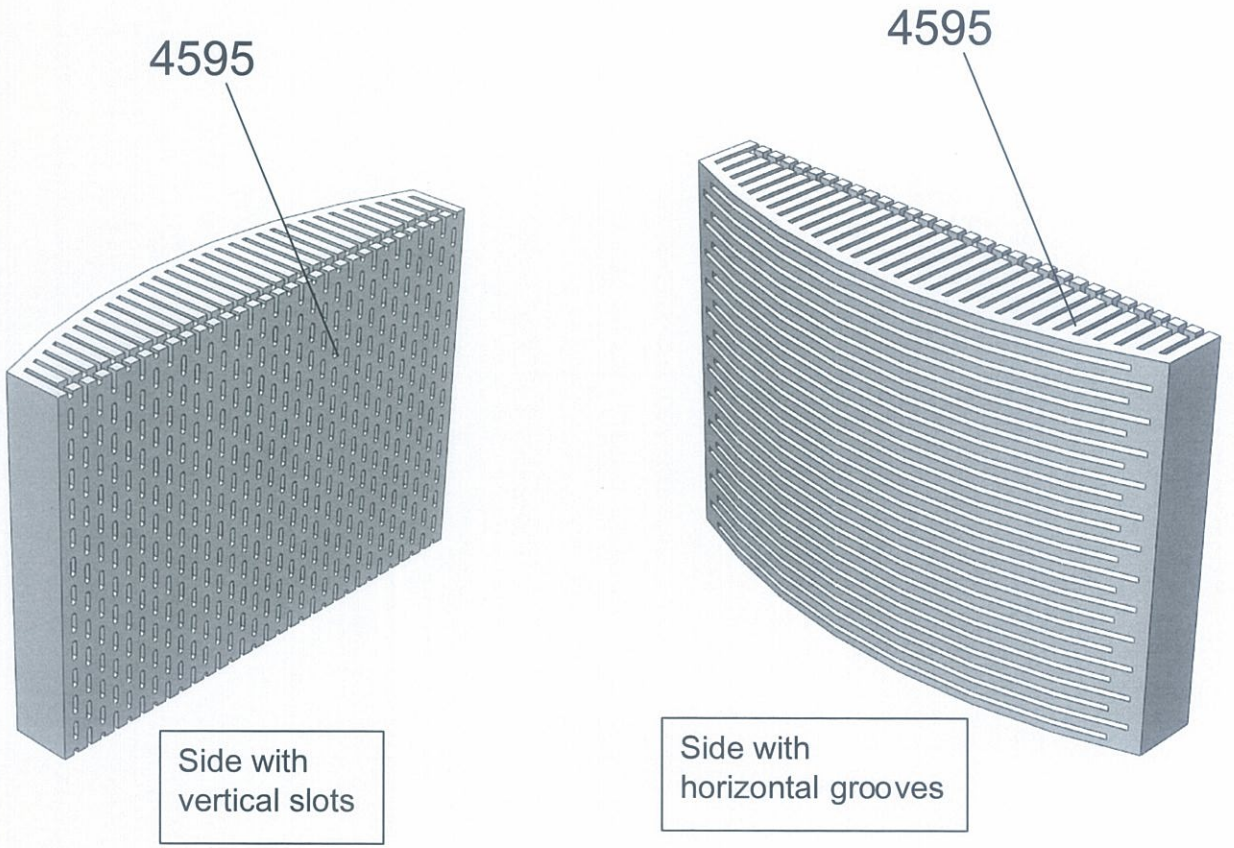
4595
4595
Side with
vertical slots
Side with
horizontal grooves

FIG. 45

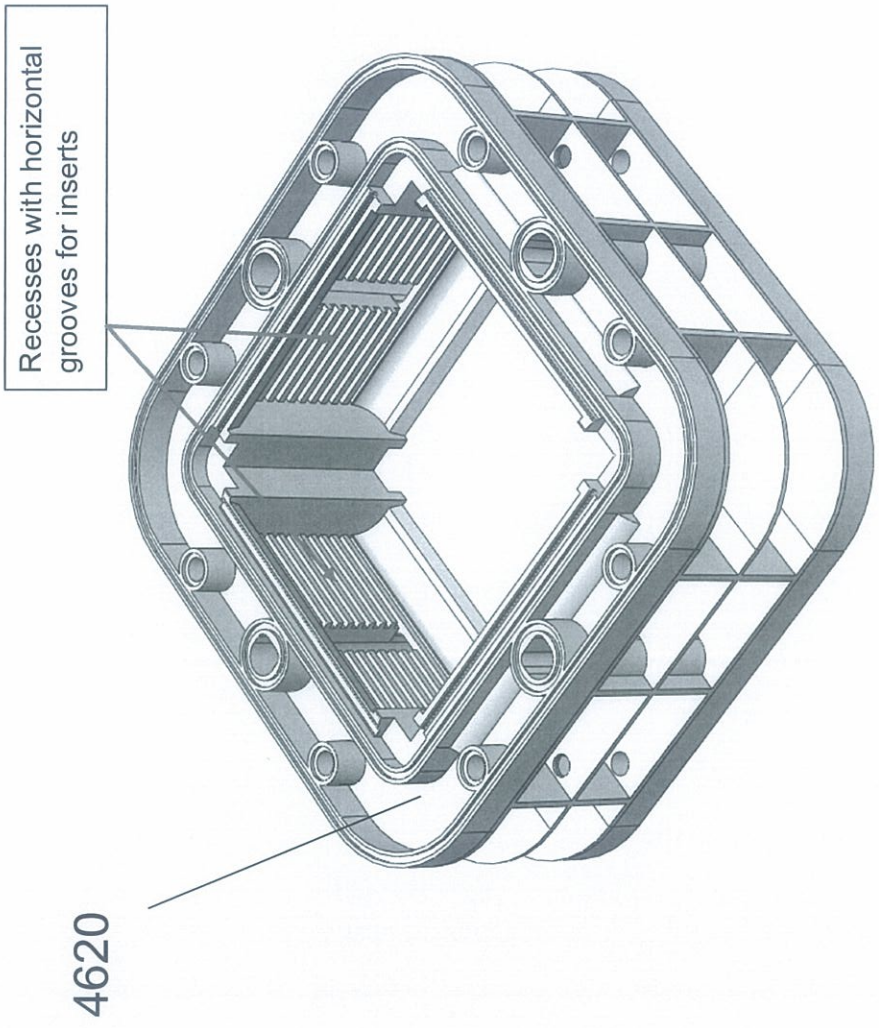

FIG. 46

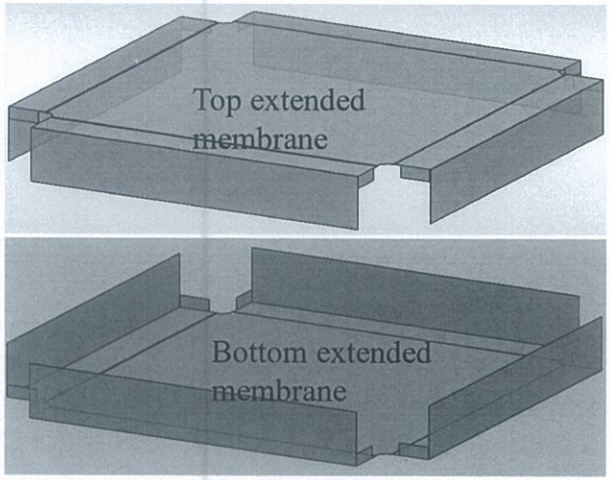

FIG. 47A

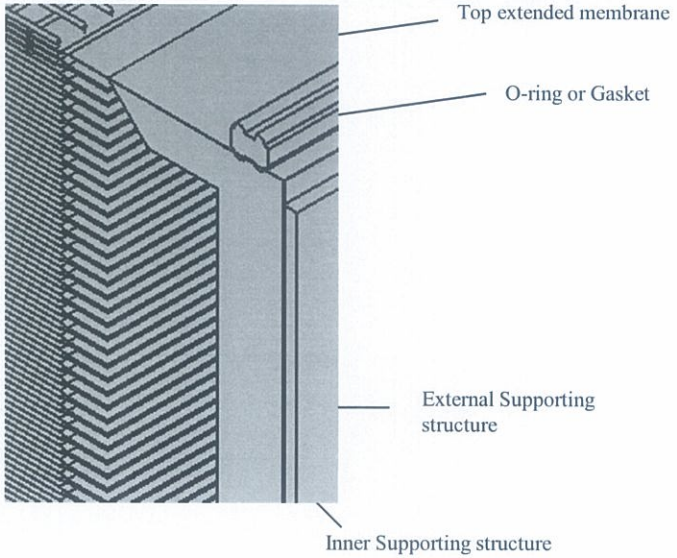

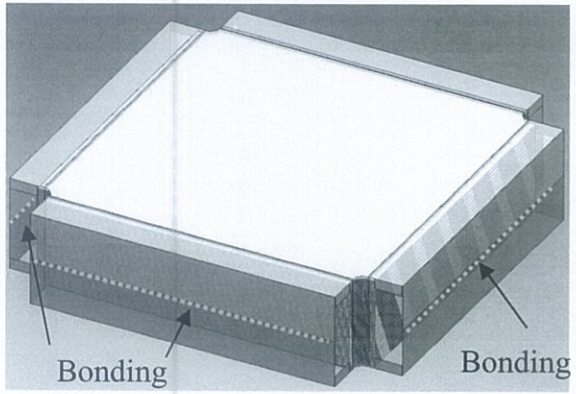

FIG. 47B

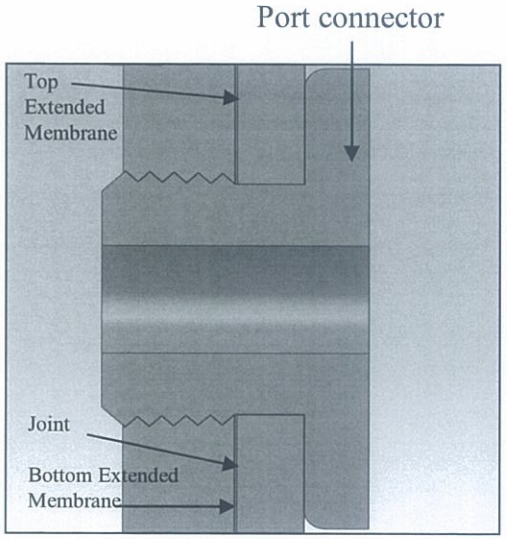

FIG. 47C

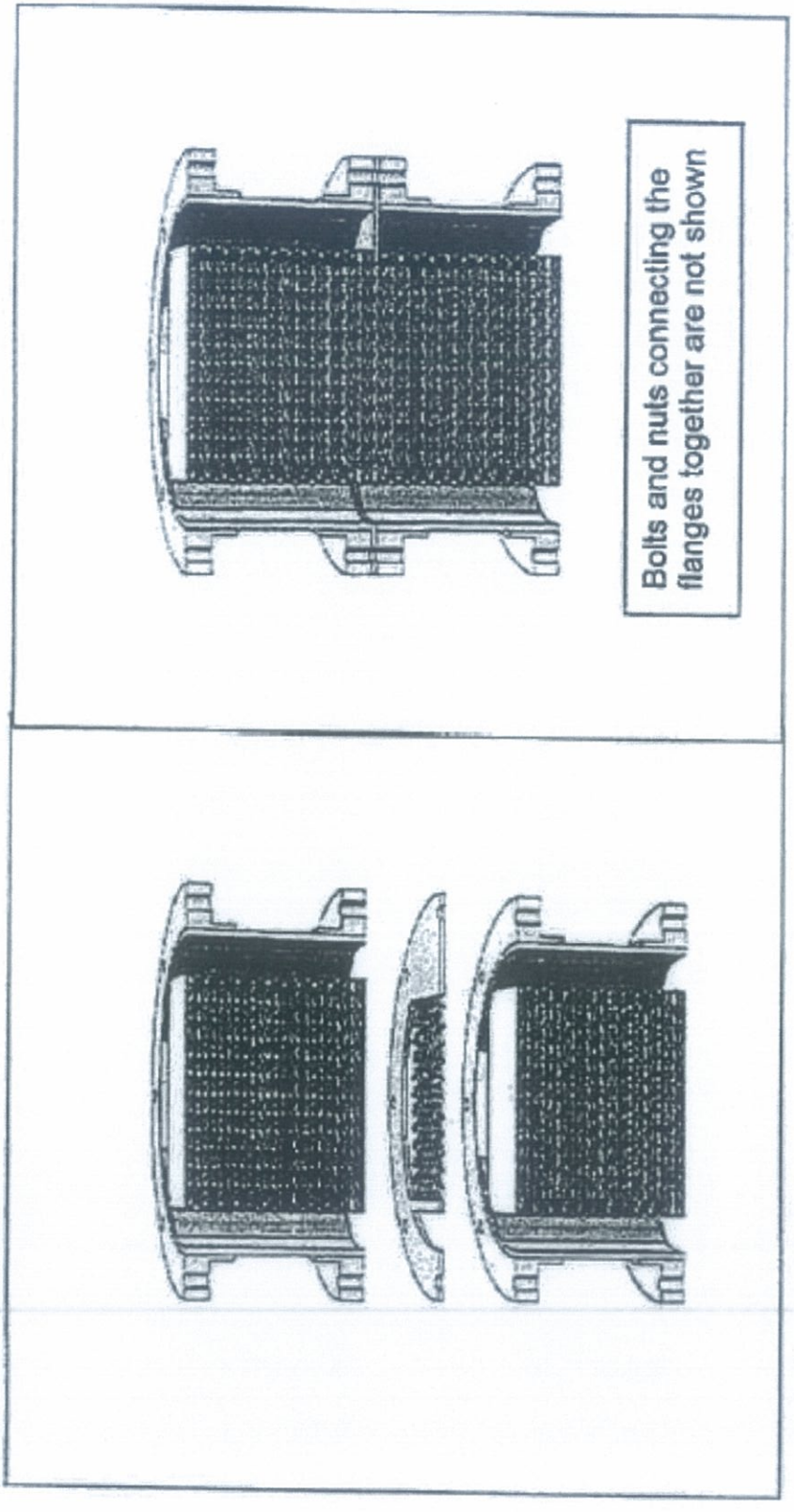
Bolts and nuts connecting the flanges together are not shown

FIG. 48

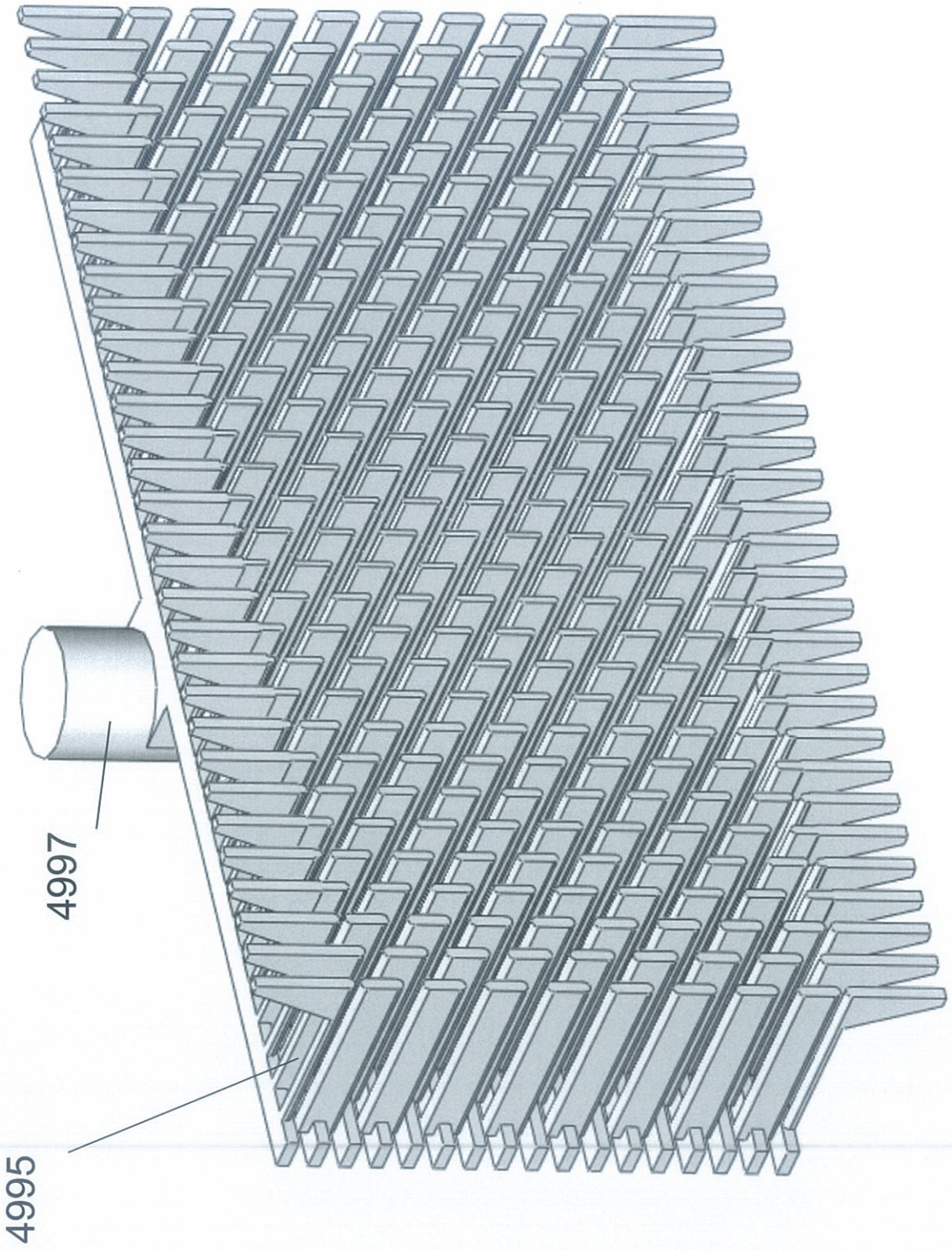

FIG. 49

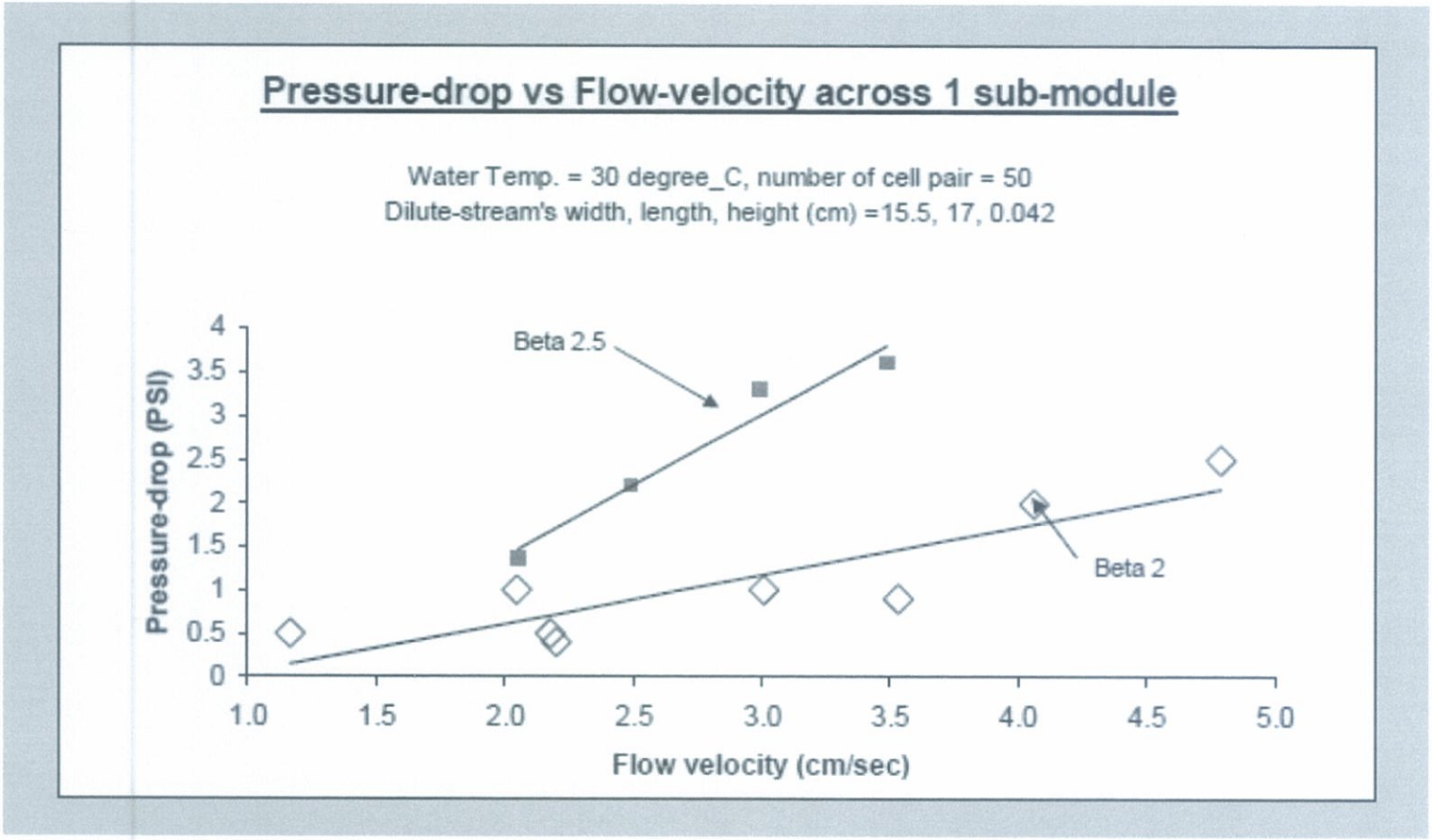
Pressure-drop vs Flow-velocity across 1 sub-module
Water Temp. = 30 degree_C, number of cell pair = 50
Dilute-stream's width, length, height (cm) =15.5, 17, 0.042
Beta 2.5
Beta 2
Pressure-drop (PSI)
Flow velocity (cm/sec)
0
0.5
1
1.5
2
2.5
3
3.5
4
1.0
1.5
2.0
2.5
3.0
3.5
4.0
4.5
5.0

FIG. 50