Figure 1.

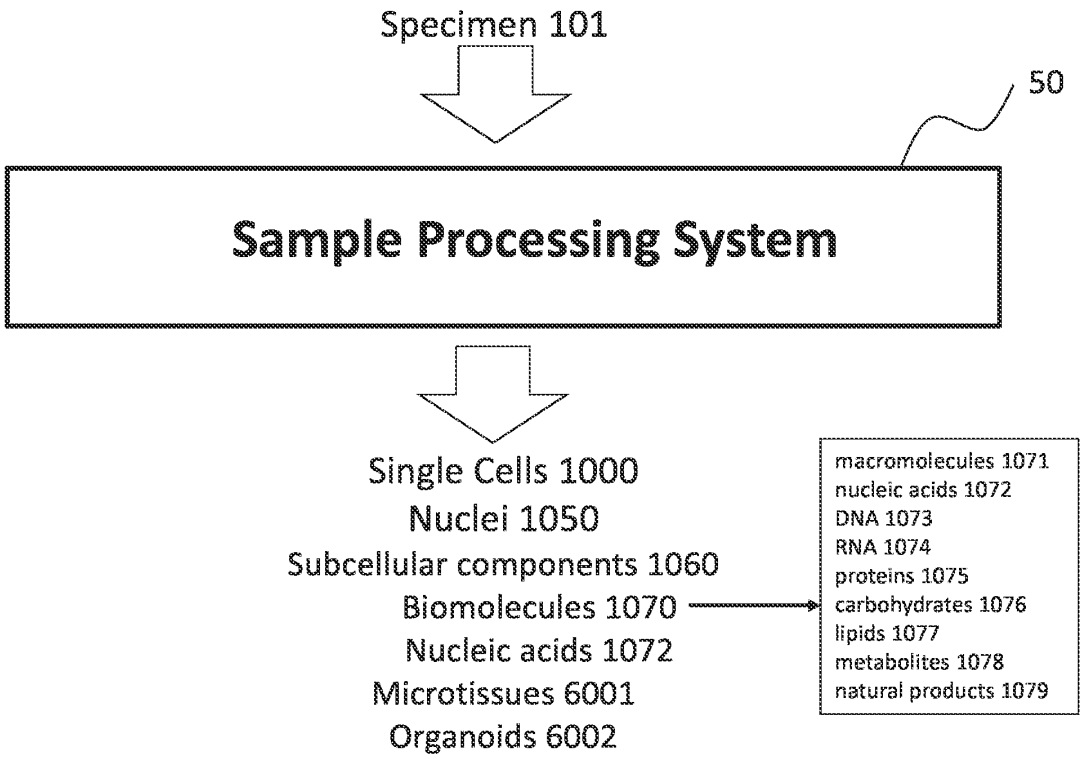
Specimen 101
50
Sample Processing System
Single Cells 1000
Nuclei 1050
Subcellular components 1060
Biomolecules 1070
Nucleic acids 1072
Microtissues 6001
Organoids 6002
macromolecules 1071
nucleic acids 1072
DNA 1073
RNA 1074
proteins 1075
carbohydrates 1076
lipids 1077
metabolites 1078
natural products 1079

Figure 2.

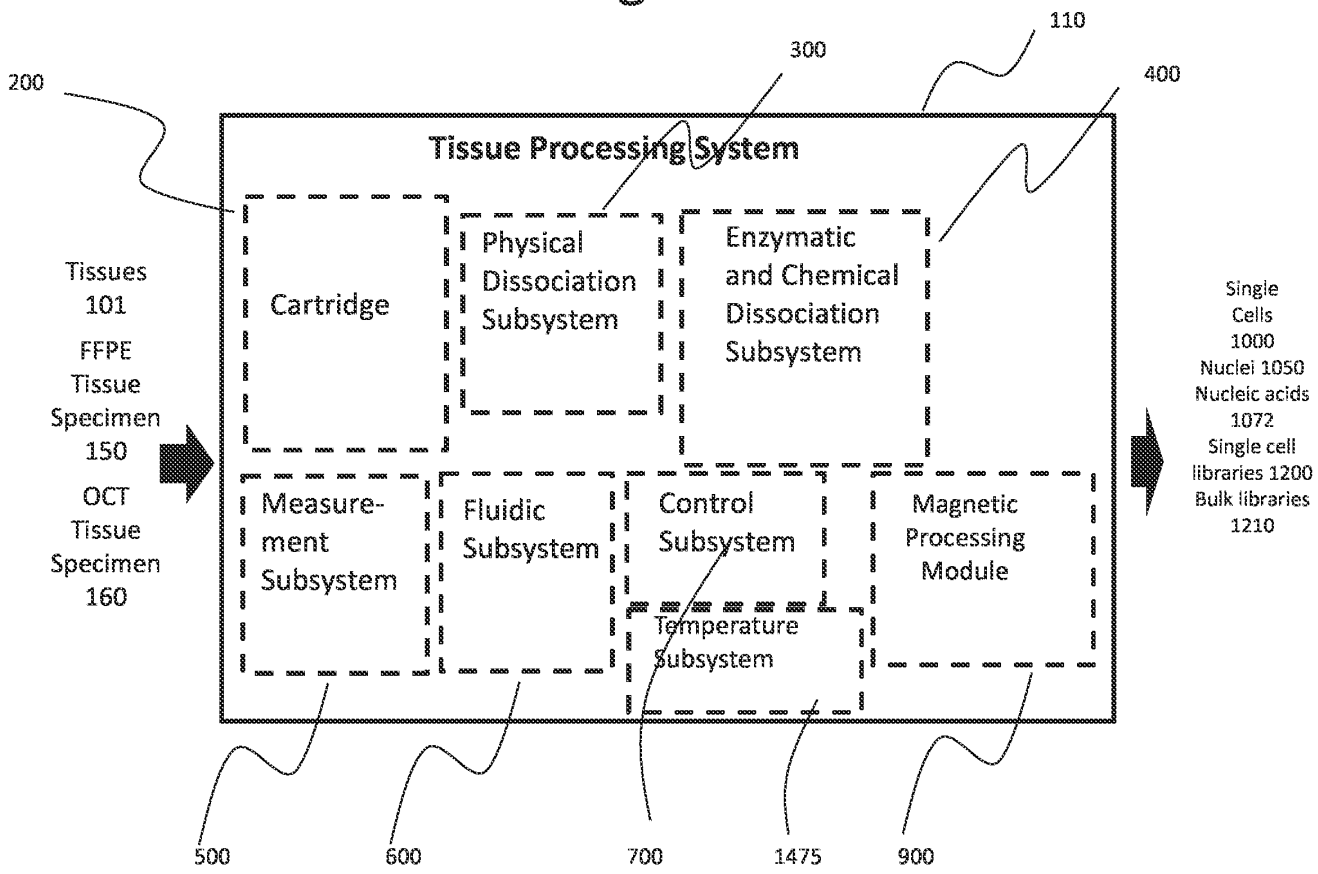
110
300
200
400
Tissue Processing System
Cartridge
Physical Dissociation Subsystem
Enzymatic and Chemical Dissociation Subsystem
Tissues 101
FFPE Tissue Specimen 150
OCT Tissue Specimen 160
Measure-ment Subsystem
Fluidic Subsystem
Control Subsystem
Temperature Subsystem
Magnetic Processing Module
Single Cells 1000
Nuclei 1050
Nucleic acids 1072
Single cell libraries 1200
Bulk libraries 1210
500
600
700
1475
900

Figure 3.

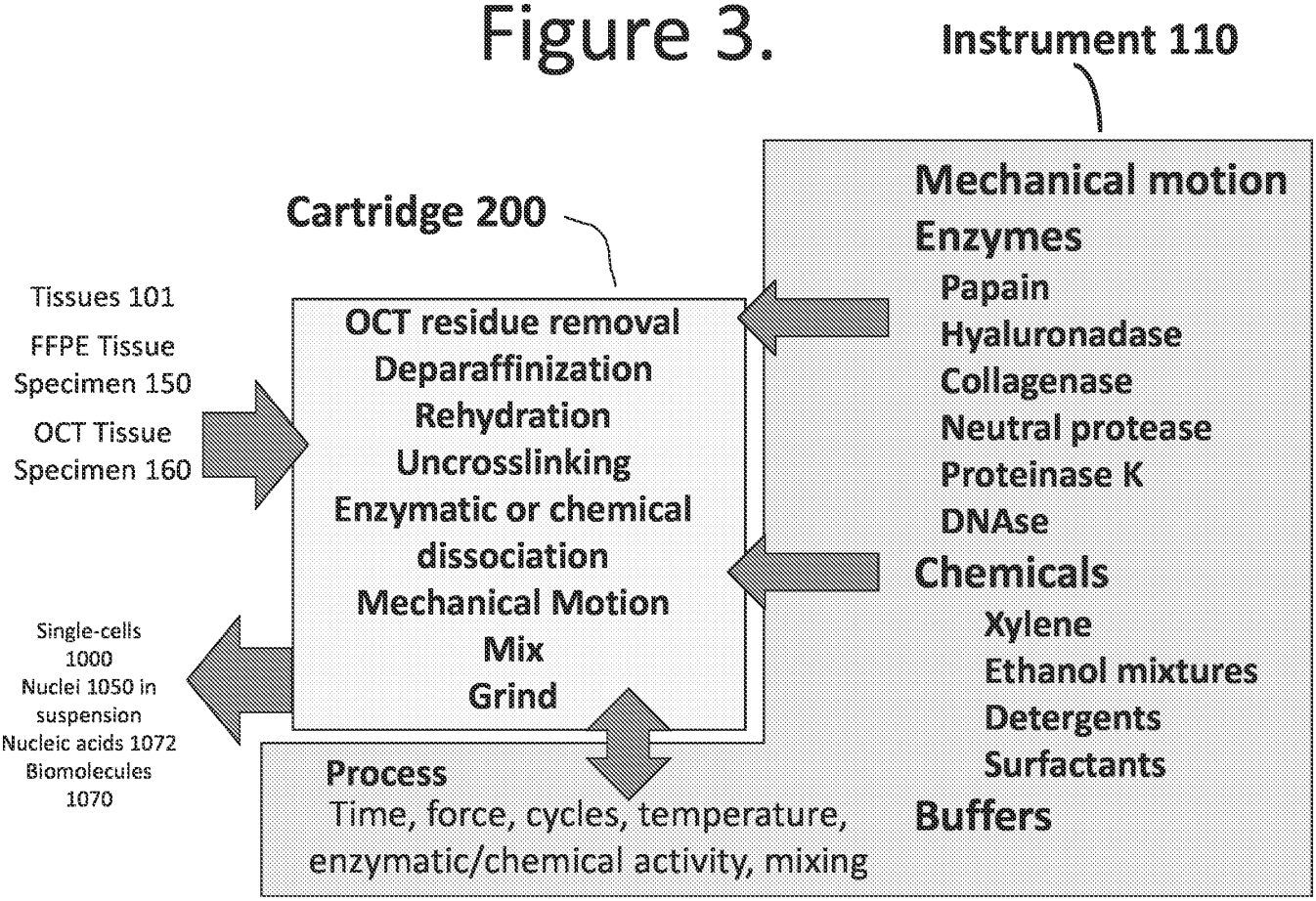
Instrument 110
Mechanical motion
Enzymes
Papain
Hyaluronadase
Collagenase
Neutral protease
Proteinase K
DNAse
Chemicals
Xylene
Ethanol mixtures
Detergents
Surfactants
Buffers
Cartridge 200
OCT residue removal
Deparaffinization
Rehydration
Uncrosslinking
Enzymatic or chemical dissociation
Mechanical Motion
Mix
Grind
Tissues 101
FFPE Tissue Specimen 150
OCT Tissue Specimen 160
Single-cells 1000
Nuclei 1050 in suspension
Nucleic acids 1072
Biomolecules 1070
Process
Time, force, cycles, temperature, enzymatic/chemical activity, mixing

Figure 4.

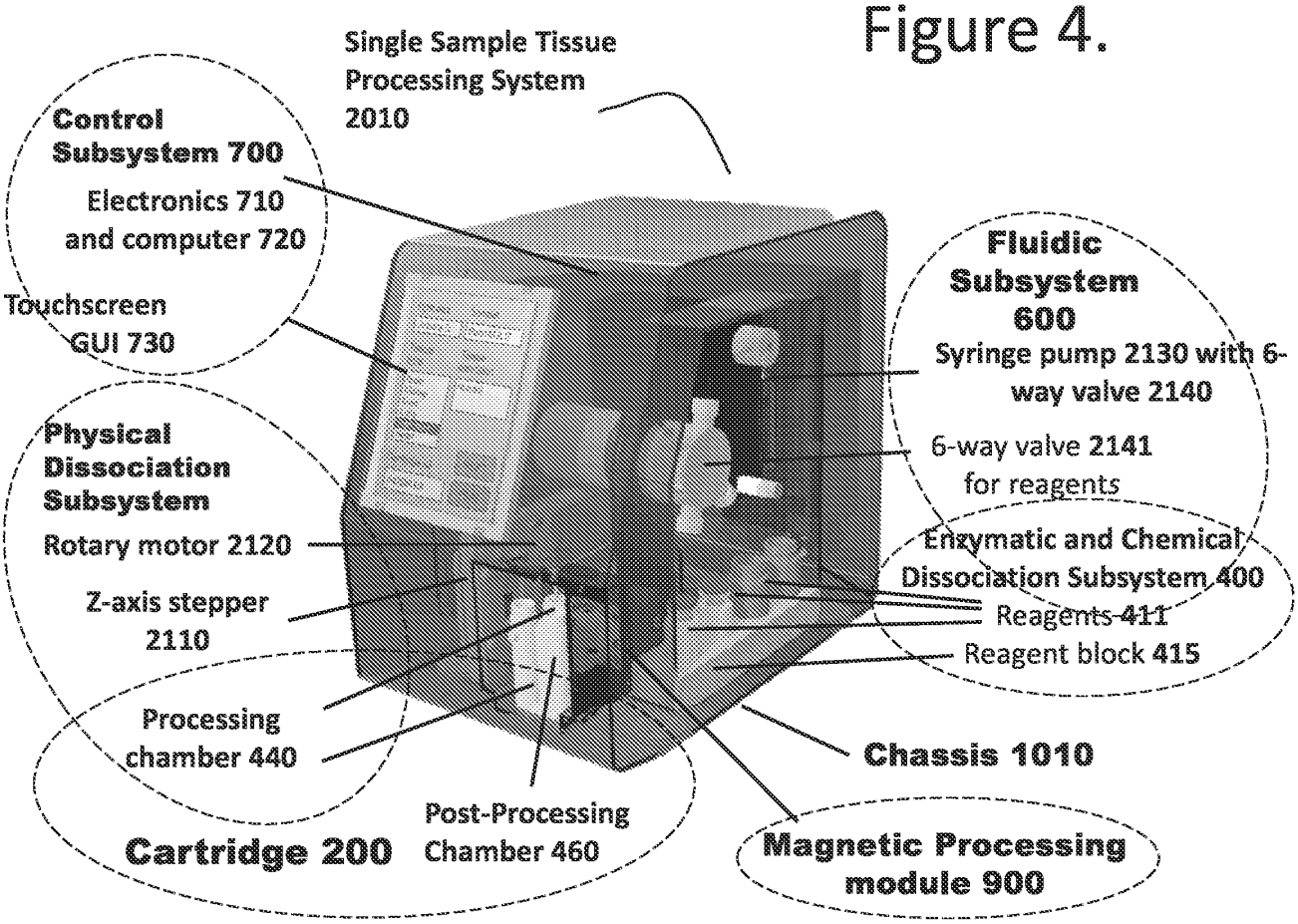
Single Sample Tissue Processing System 2010
Control Subsystem 700
Electronics 710 and computer 720
Touchscreen GUI 730
Physical Dissociation Subsystem
Rotary motor 2120
Z-axis stepper 2110
Processing chamber 440
Cartridge 200
Post-Processing Chamber 460
Fluidic Subsystem 600
Syringe pump 2130 with 6-way valve 2140
6-way valve 2141 for reagents
Enzymatic and Chemical Dissociation Subsystem 400
Reagents 411
Reagent block 415
Chassis 1010
Magnetic Processing module 900

Figure 5.

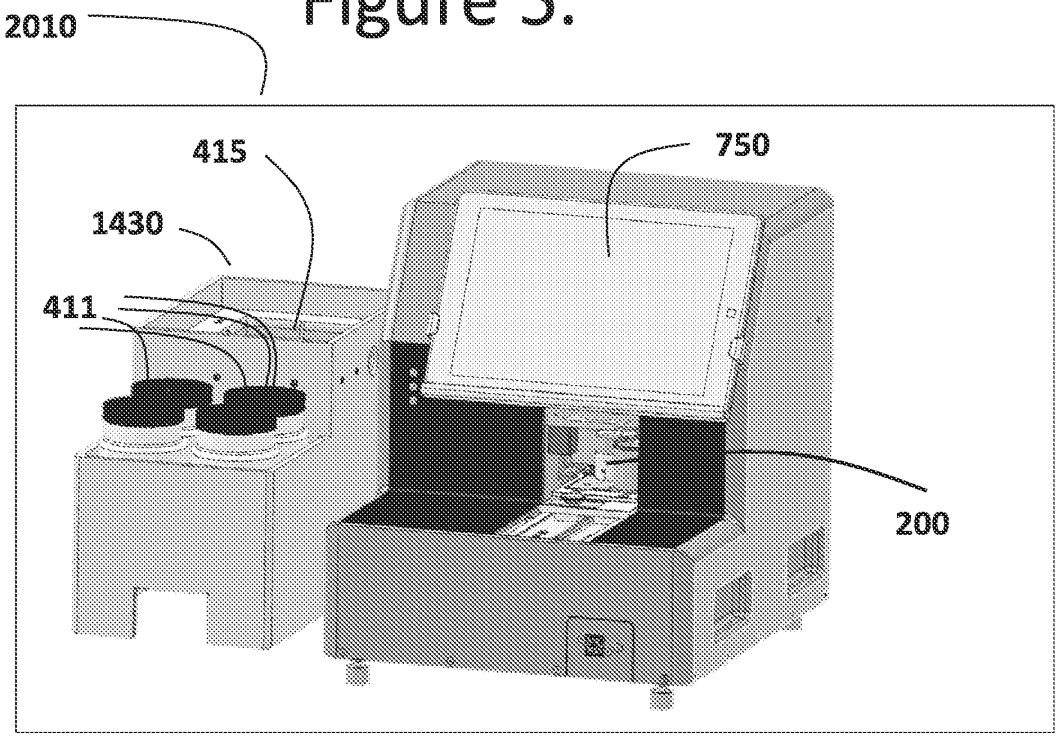

Figure 6.

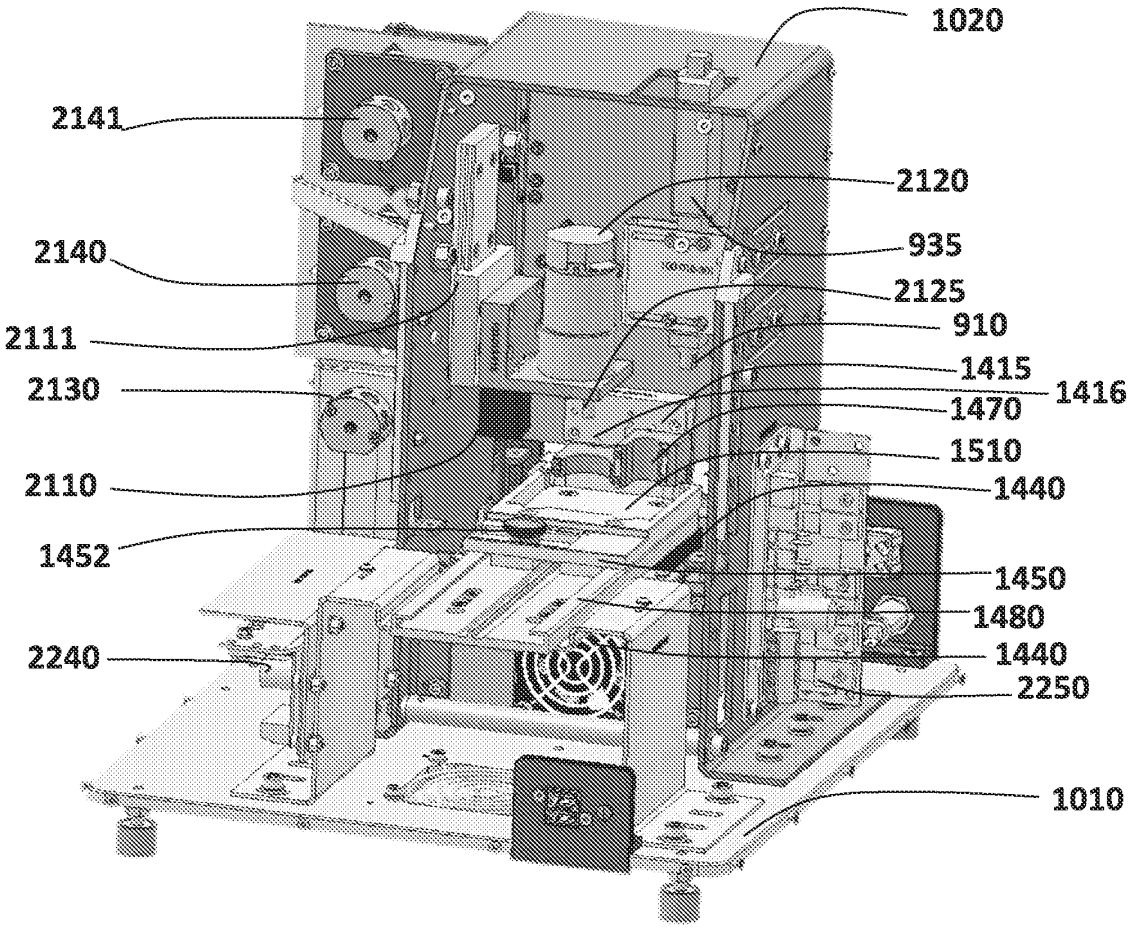
1020
2141
2120
2140
935
2125
2111
910
1415
2130
1416
1470
1510
2110
1440
1452
1450
1480
2240
1440
2250
1010

Figure 7.

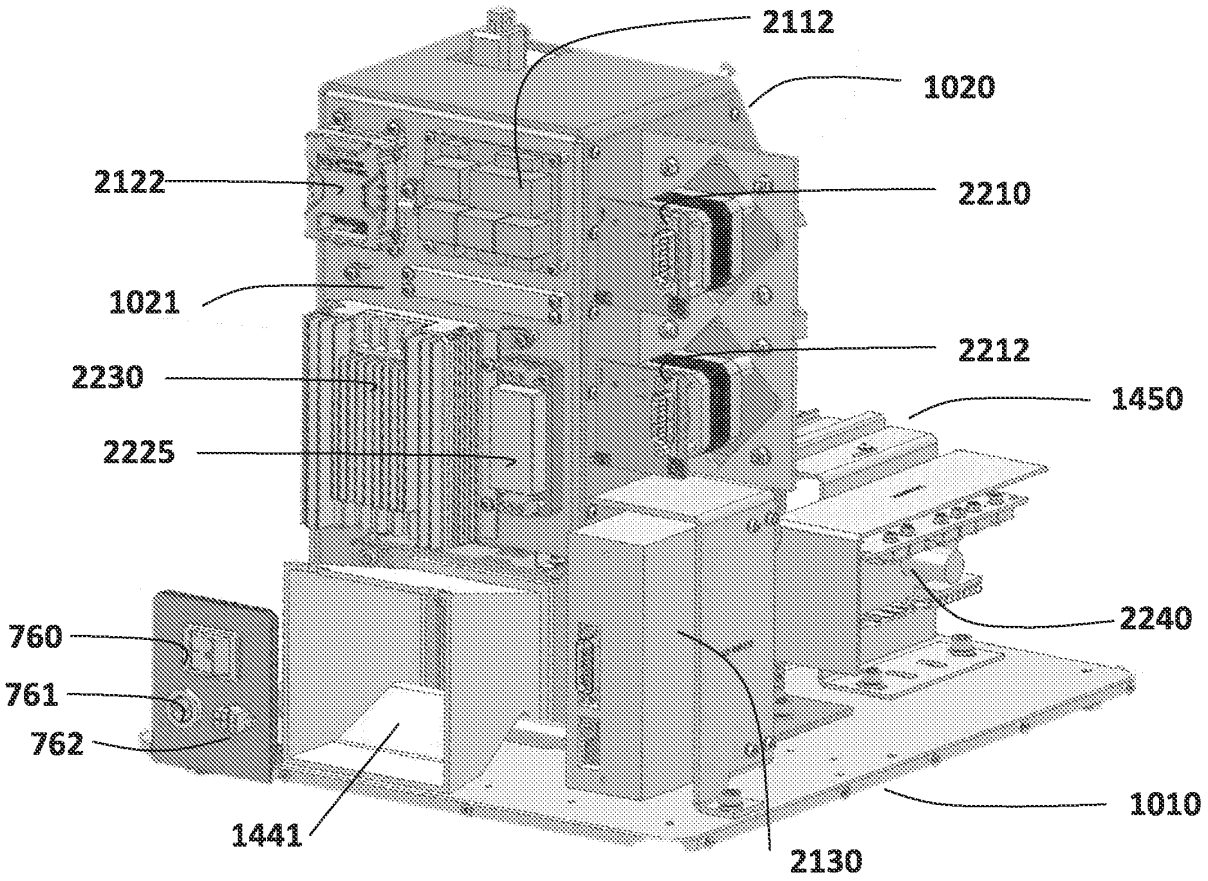
2112
1020
2122
2210
1021
2212
2230
1450
2225
2240
760
761
762
1010
1441
2130

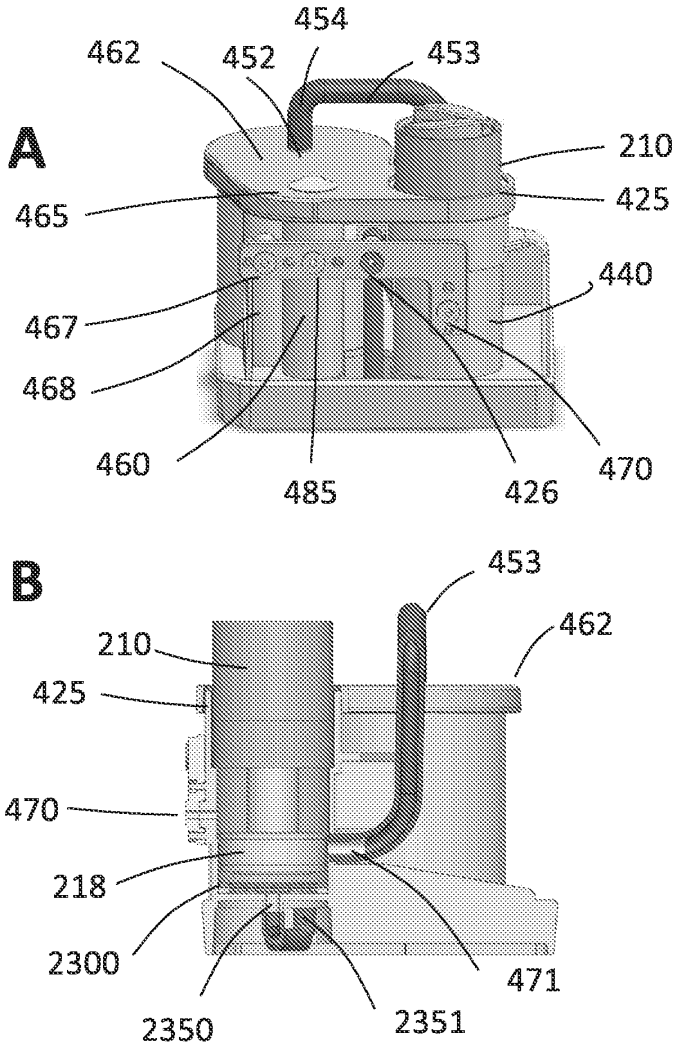
A
462
452
454
453
210
425
465
440
467
468
460
485
426
470
B
453
462
210
425
470
218
2300
2350
2351
471
C
210
214
211
212
216
213
218
355

Figure 8.

Figure 9.

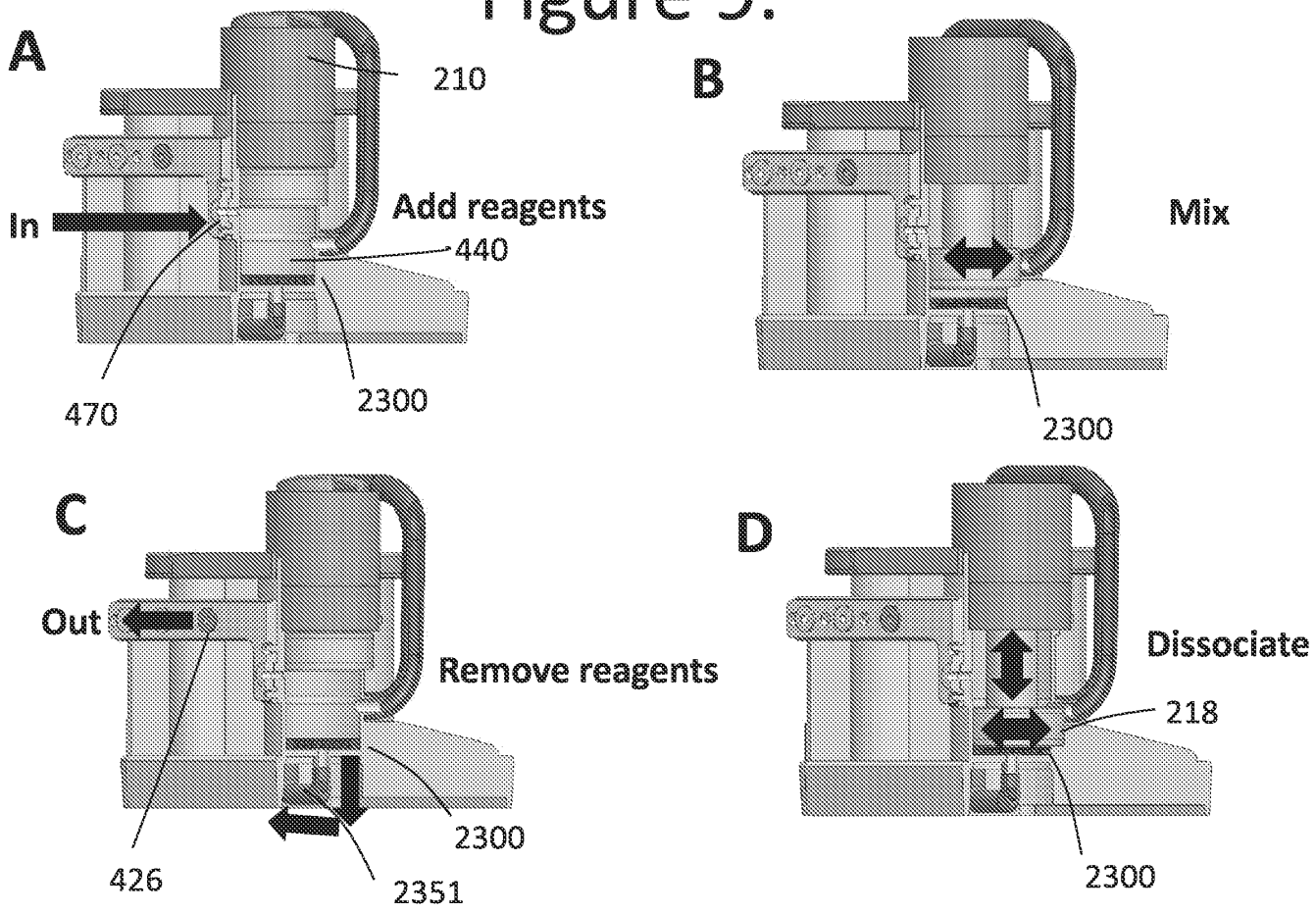
A
210
In
Add reagents
440
470
2300
B
Mix
2300
C
Out
Remove reagents
2300
426
2351
D
Dissociate
218
2300

Figure 10.

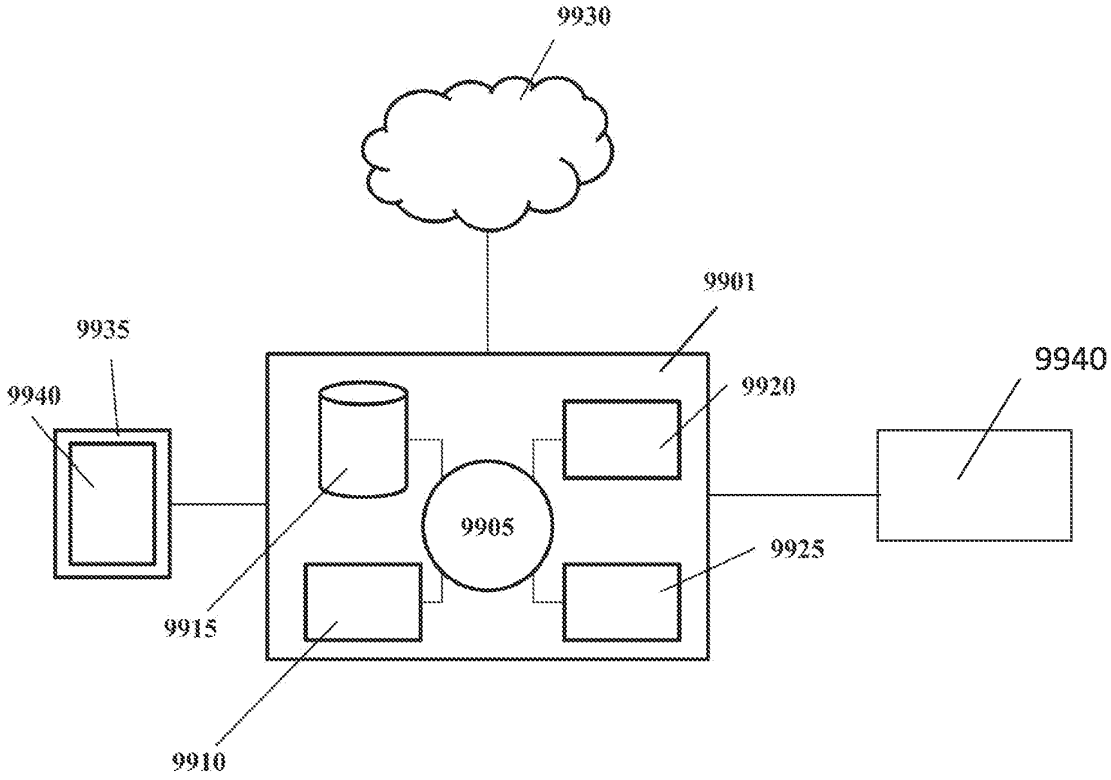

Figure 11.

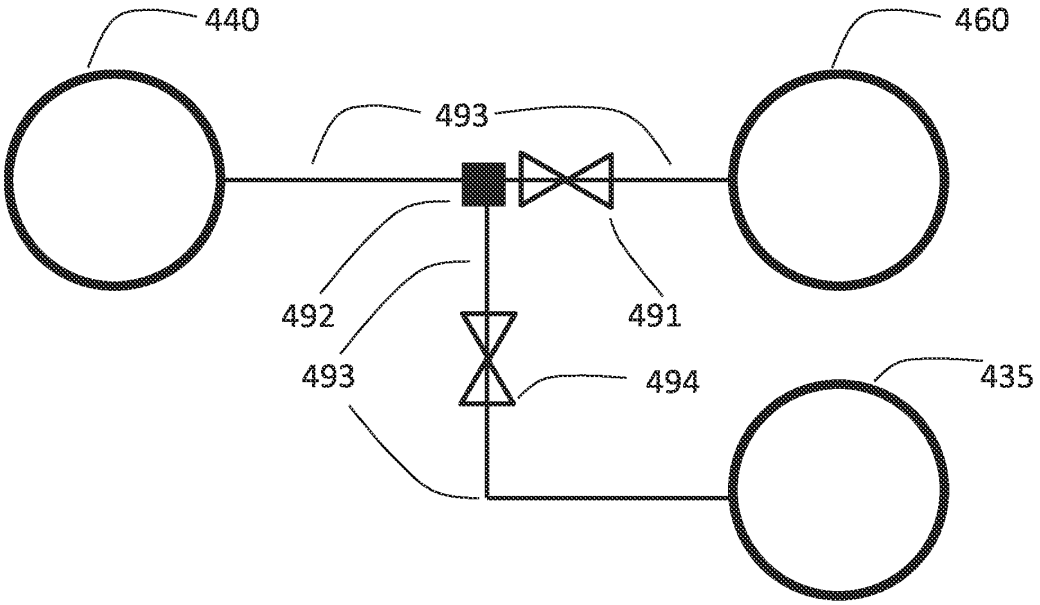

Figure 12.

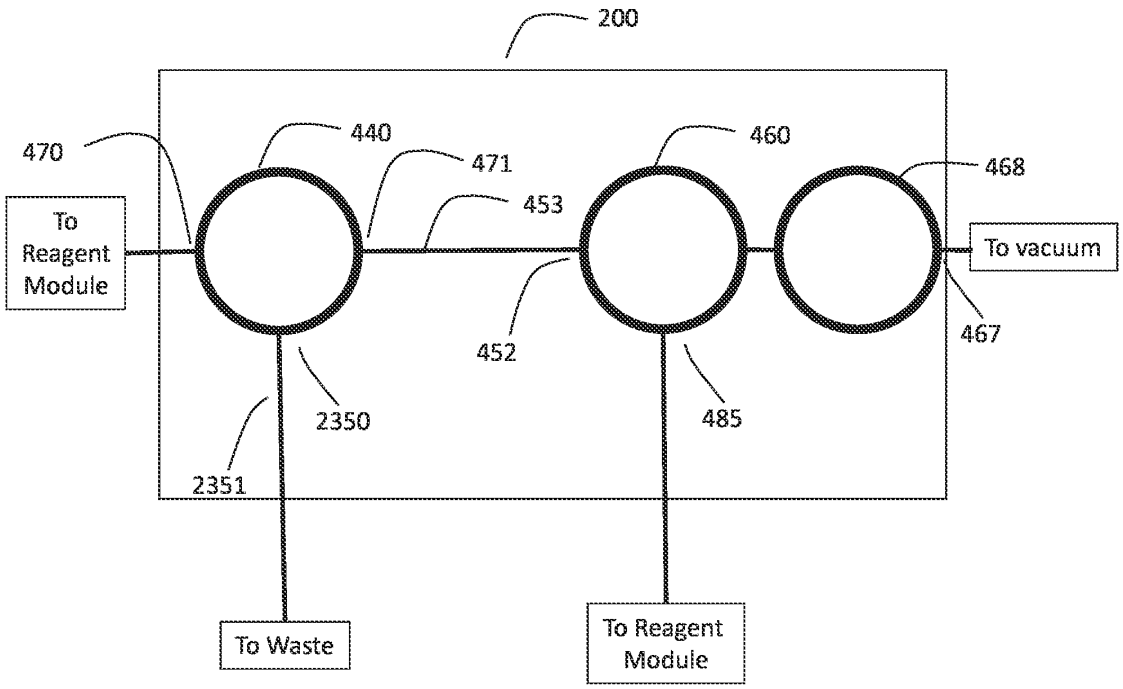
200
470
440
471
460
468
To Reagent Module
453
To vacuum
452
467
2350
485
2351
To Waste
To Reagent Module

Figure 13.

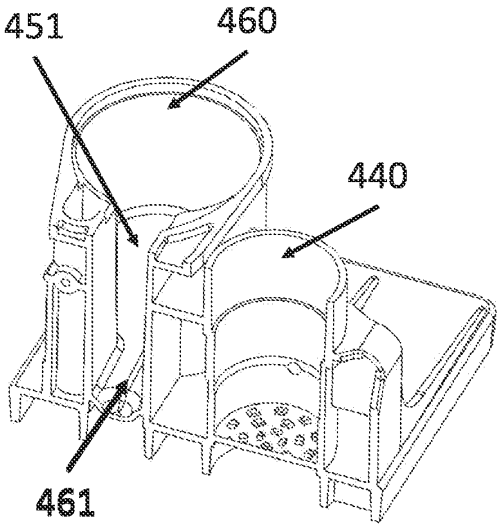

13A

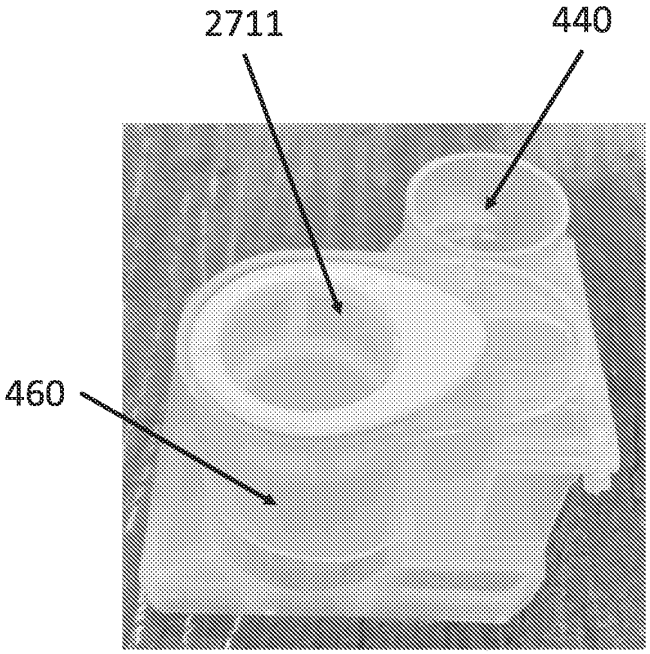

13B

Figure 14.

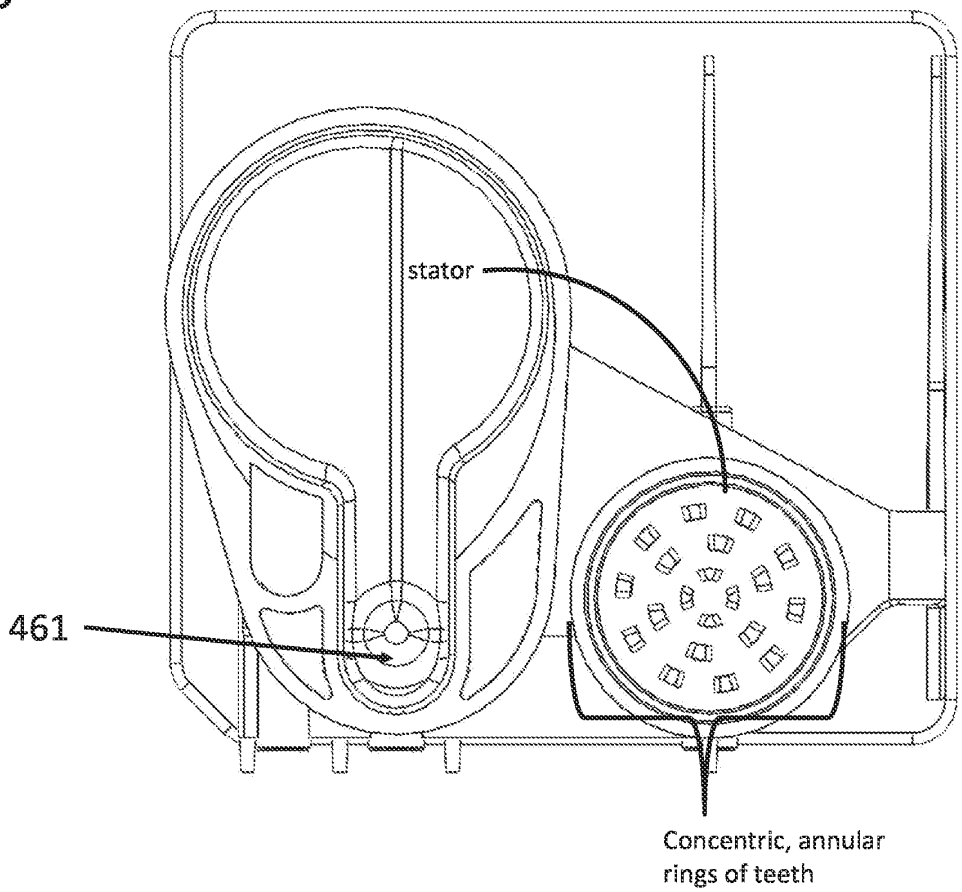

Figure 15.

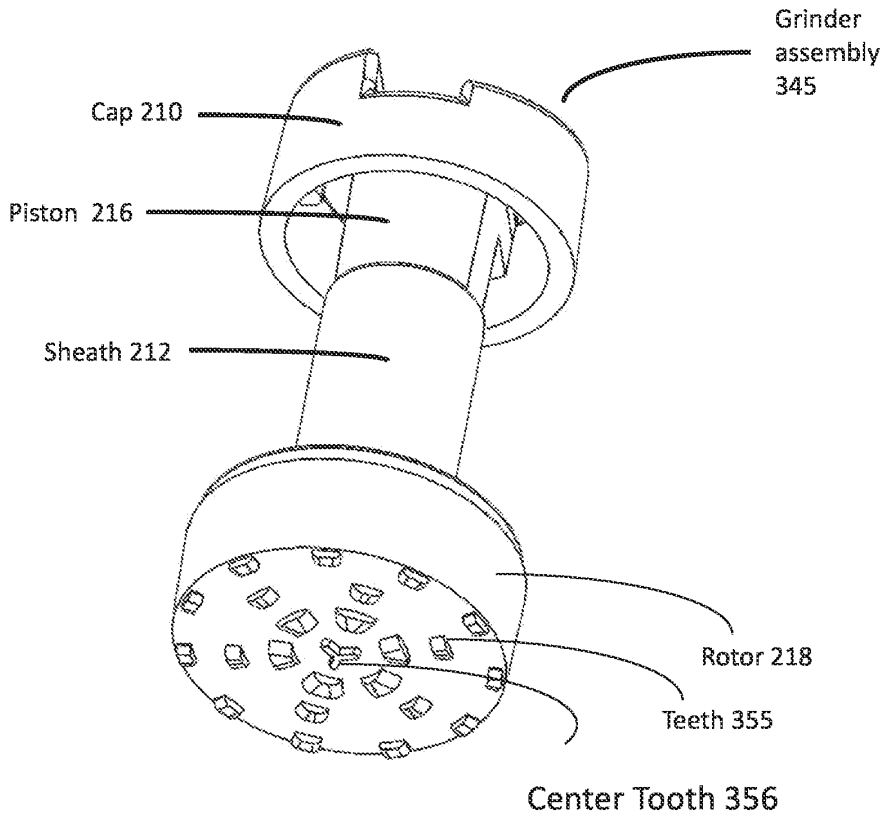
Grinder assembly 345
Cap 210
Piston 216
Sheath 212
Rotor 218
Teeth 355
Center Tooth 356

Figure 16.

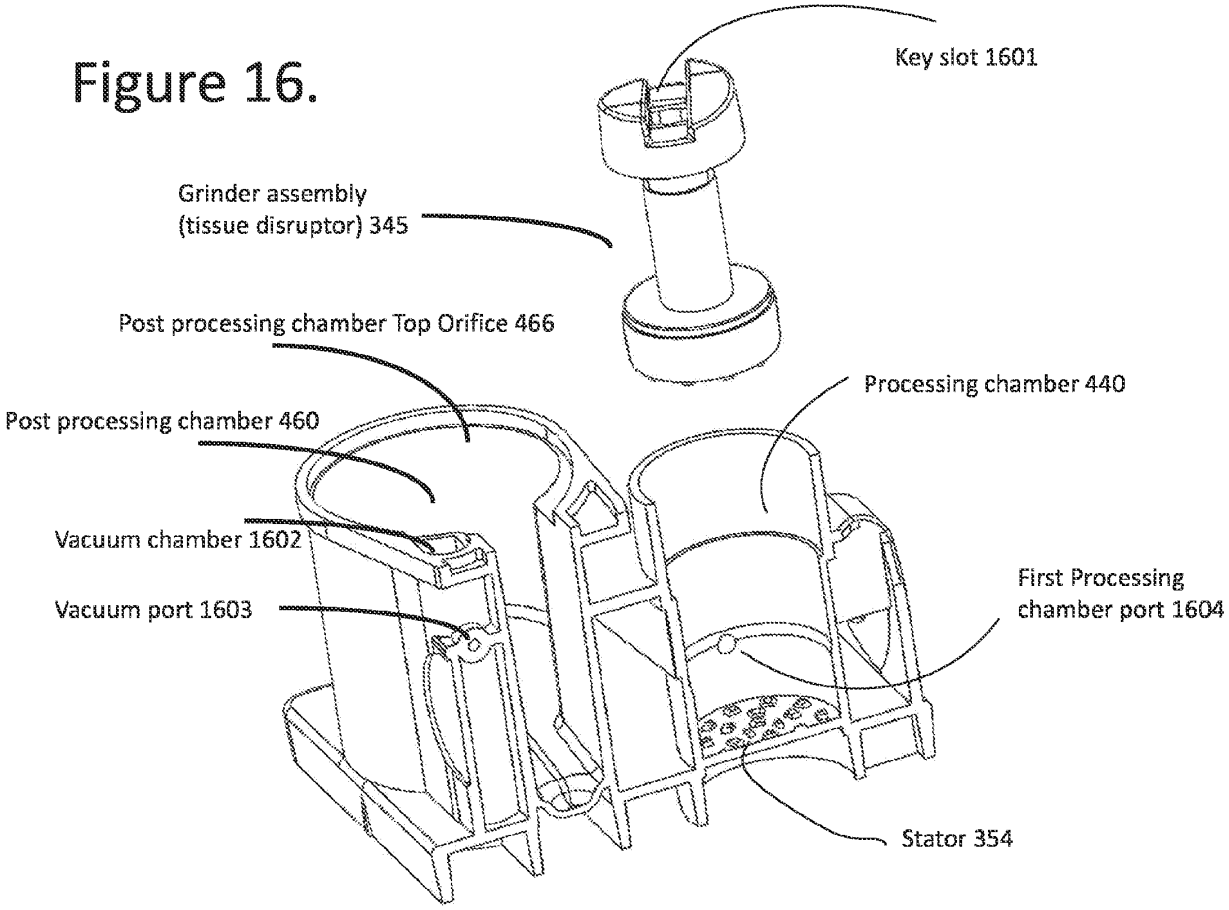
Key slot 1601
Grinder assembly
(tissue disruptor) 345
Post processing chamber Top Orifice 466
Processing chamber 440
Post processing chamber 460
Vacuum chamber 1602
Vacuum port 1603
First Processing
chamber port 1604
Stator 354

Figure 17.

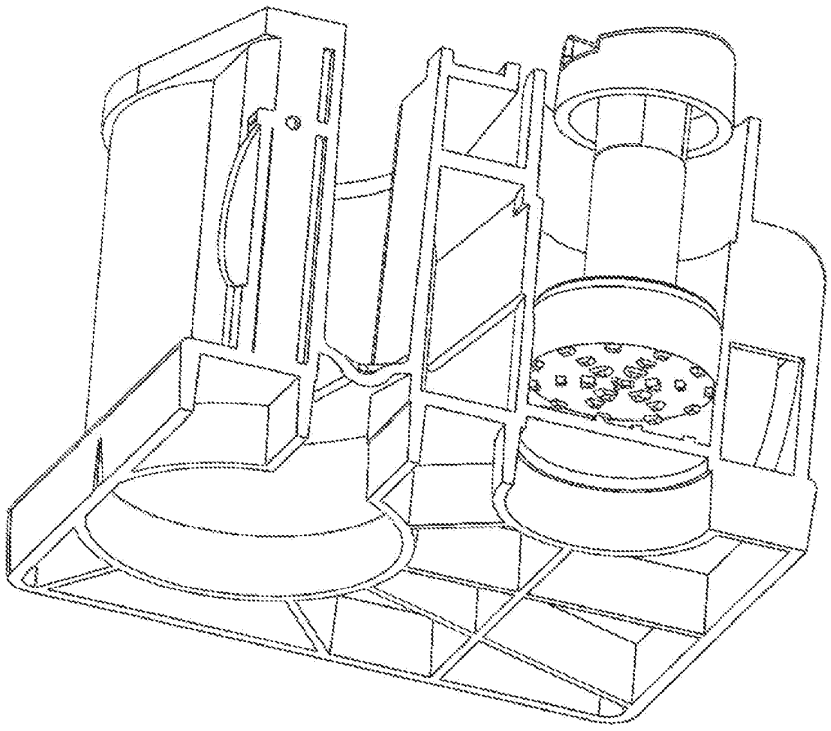

Figure 18.

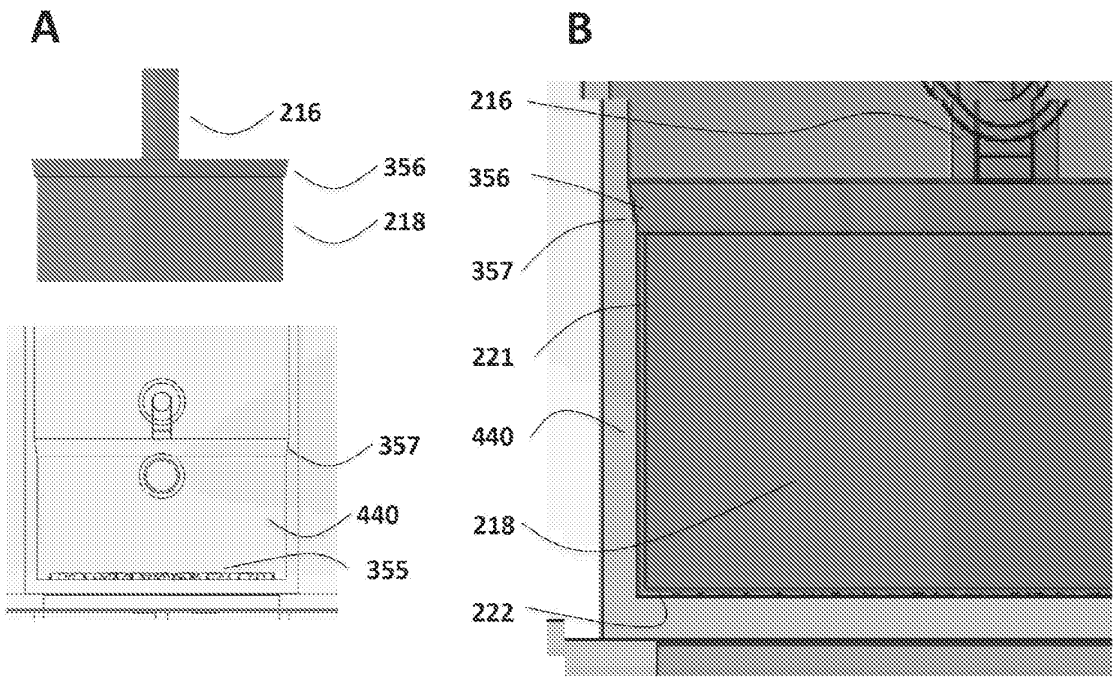

Figure 19.

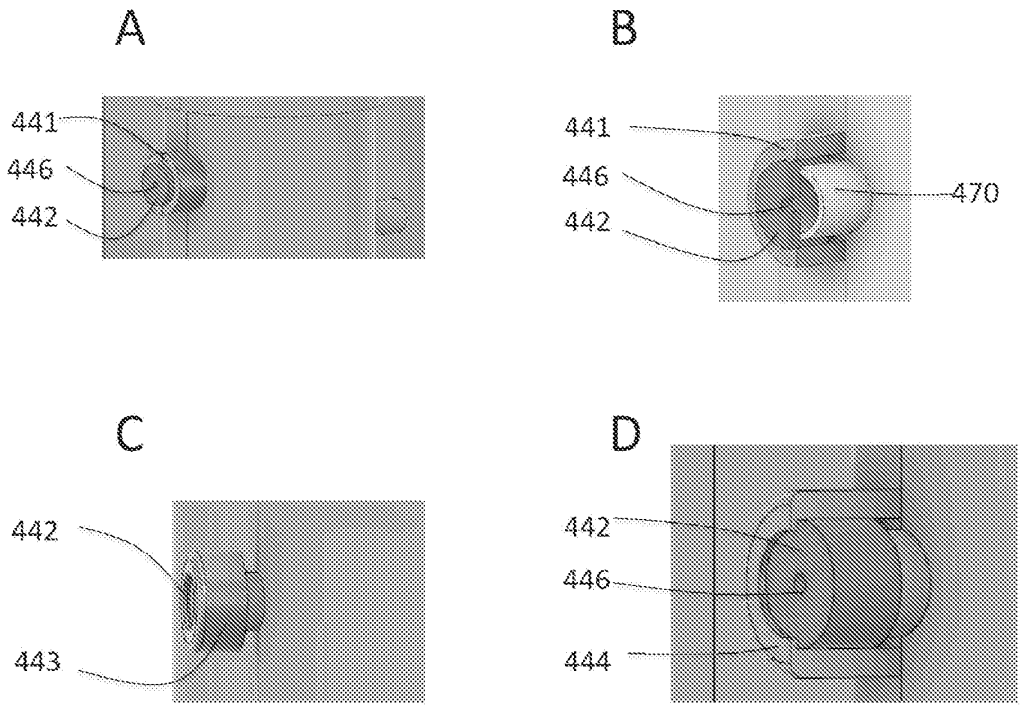

Figure 20.

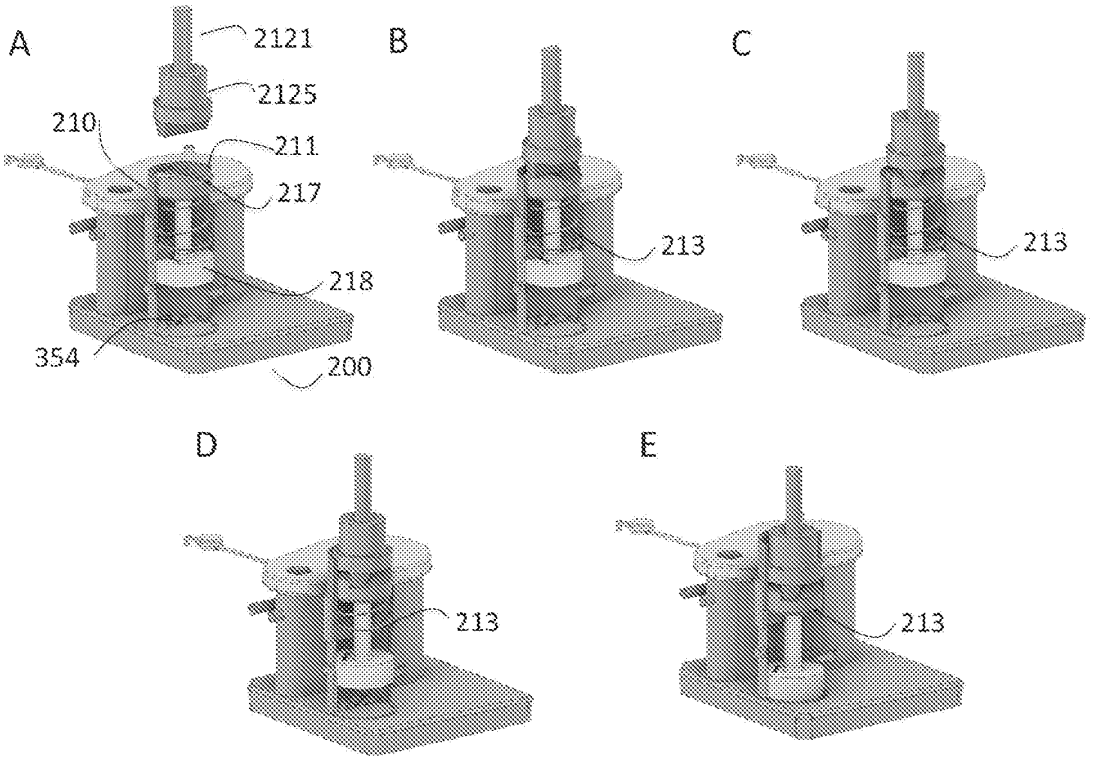

Figure 21.

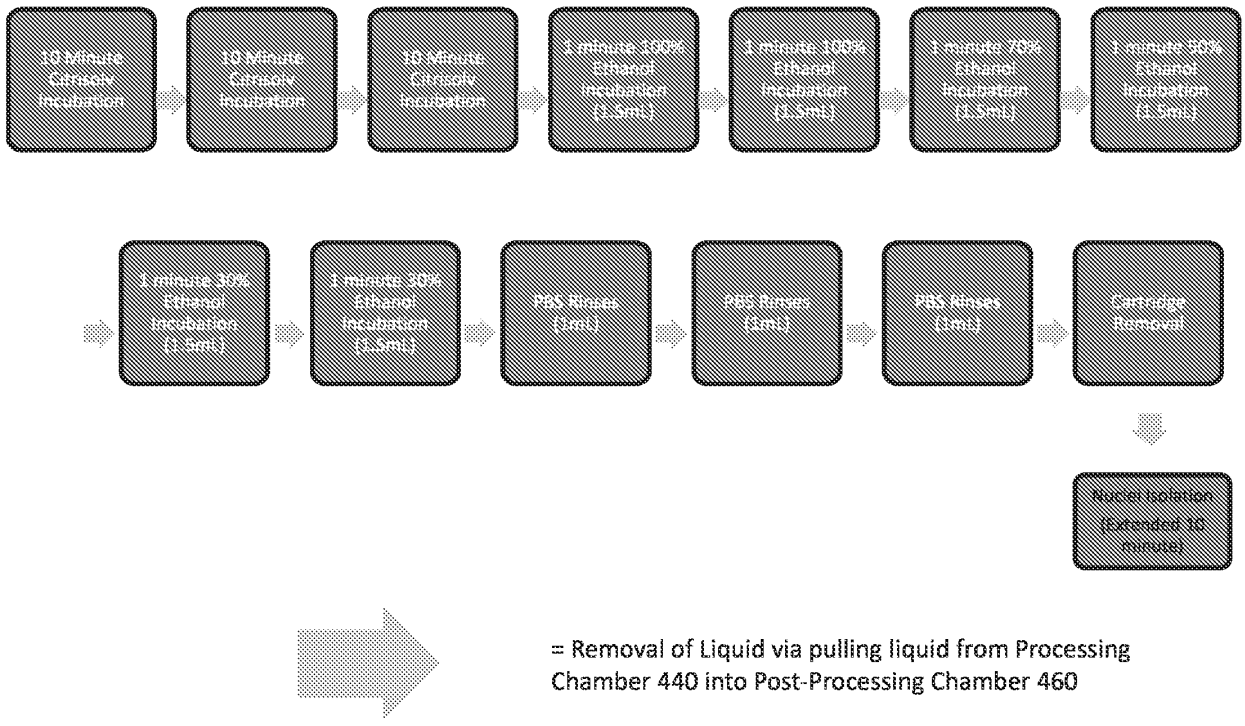
10 Minute Carbon Incubation
10 Minute Carbon Incubation
10 Minute Carbon Incubation
1 minute 100% Ethanol Incubation (0.5mL)
1 minute 100% Ethanol Incubation (0.5mL)
1 minute 70% Ethanol Incubation (0.5mL)
1 minute 30% Ethanol Incubation (0.5mL)
1 minute 30% Ethanol Incubation (0.5mL)
1 minute 30% Ethanol Incubation (0.5mL)
PBS Rinse (1mL)
PBS Rinse (1mL)
PBS Rinse (1mL)
Cartridge Removal
Nuclei Isolation (Extended 10 minutes)
= Removal of Liquid via pulling liquid from Processing Chamber 440 into Post-Processing Chamber 460

Figure 22.

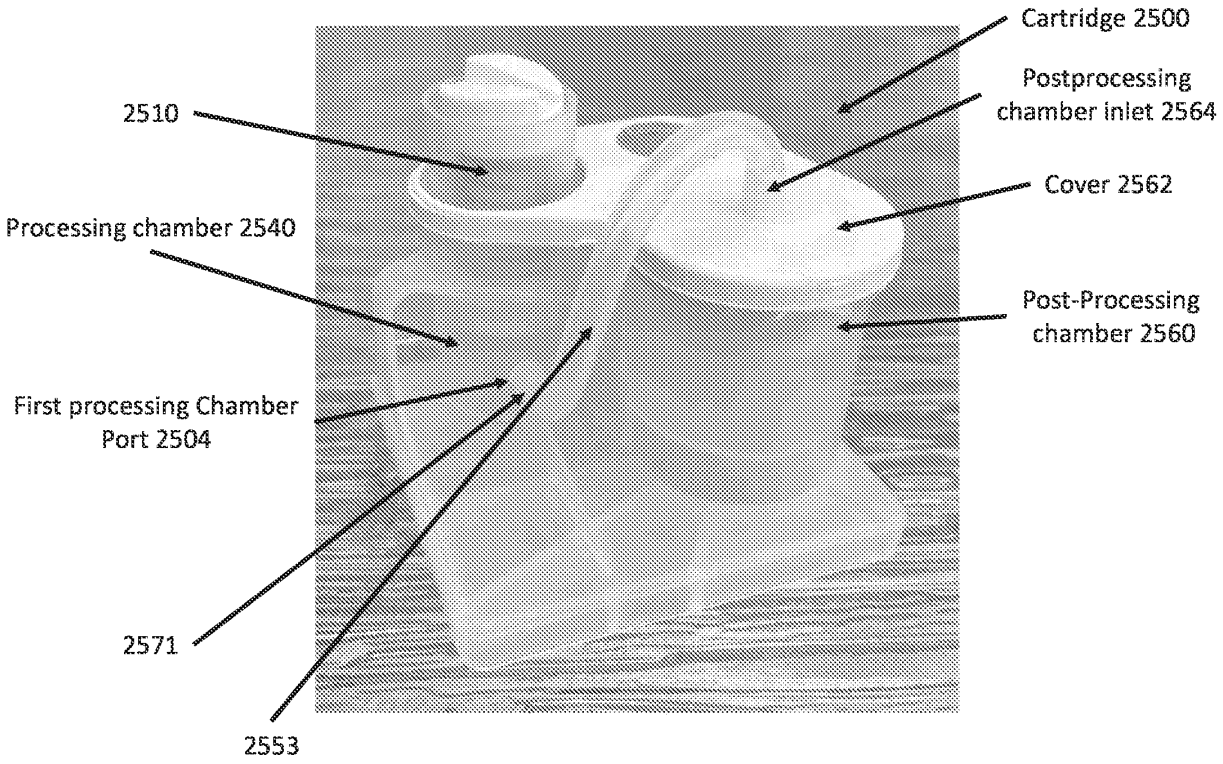
Cartridge 2500
Postprocessing chamber inlet 2564
2510
Cover 2562
Processing chamber 2540
Post-Processing chamber 2560
First processing Chamber Port 2504
2571
2553

Figure 23.

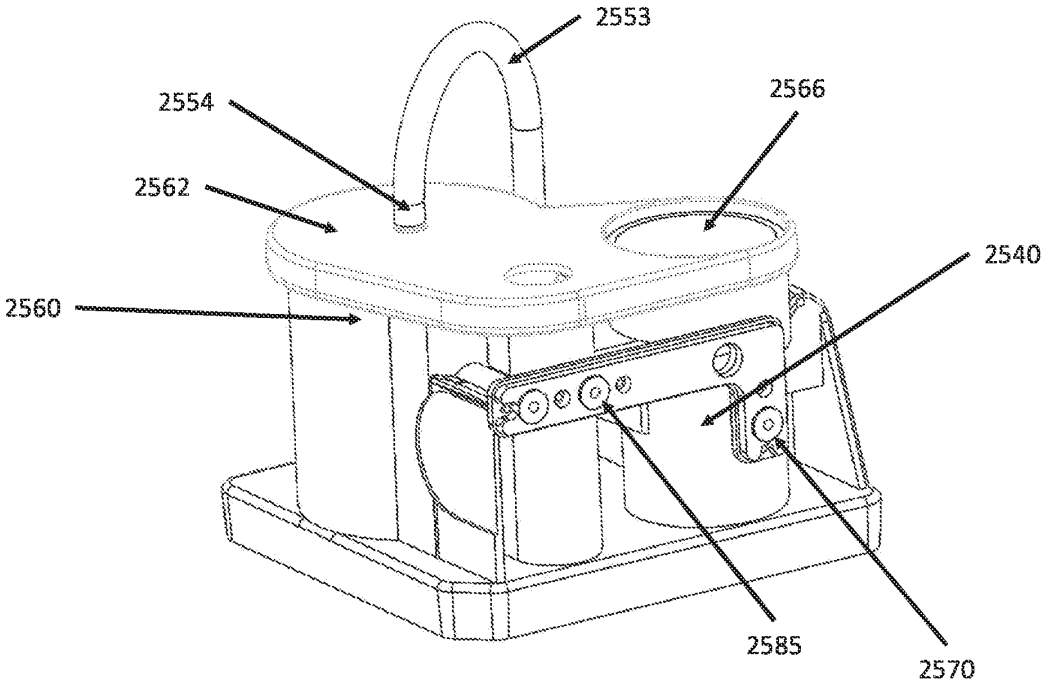

Figure 24.

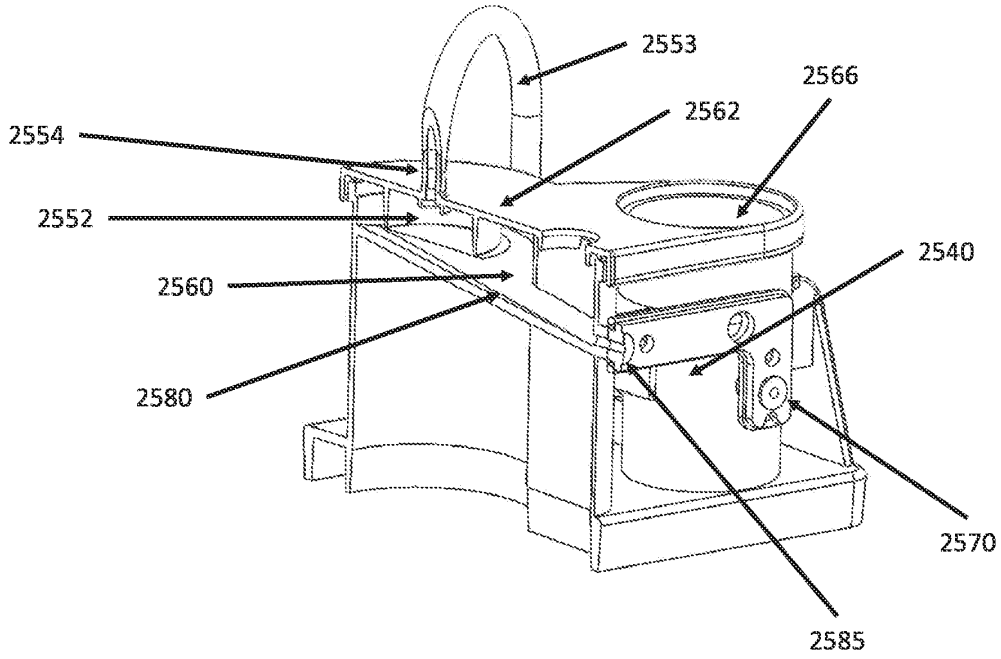

Figure 25.

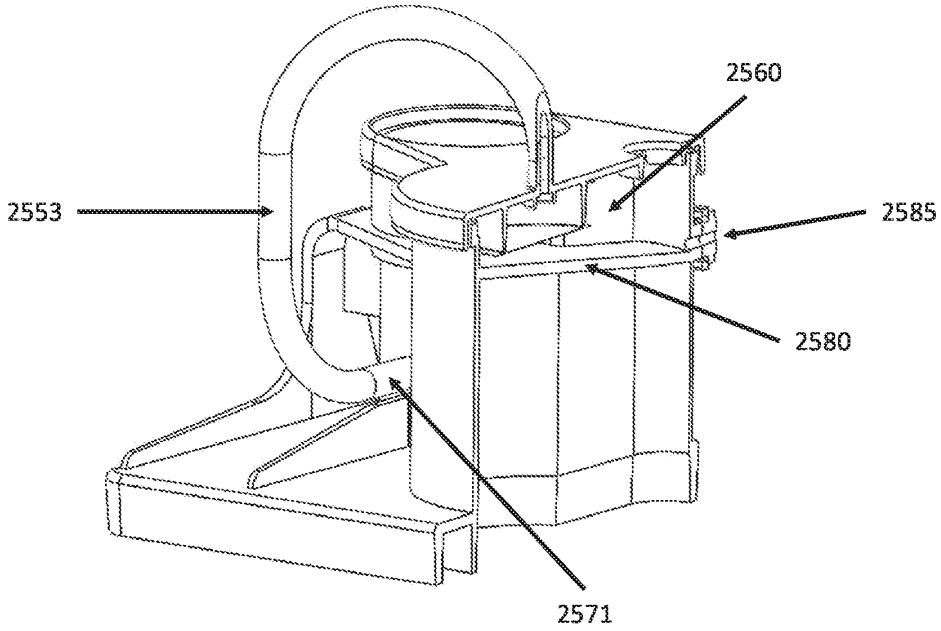

Figure 26.

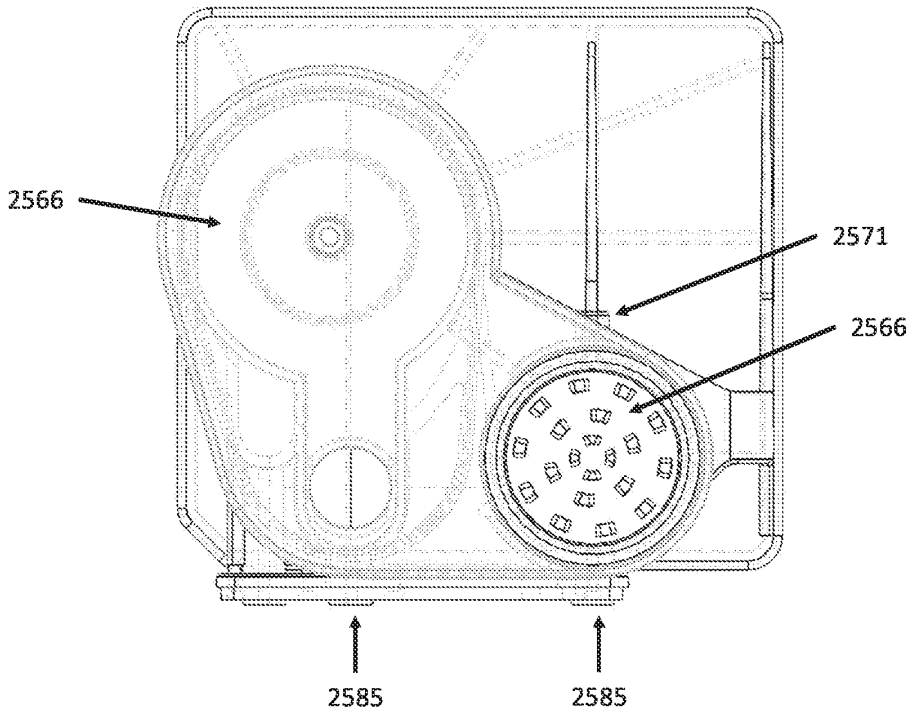

Figure 27.

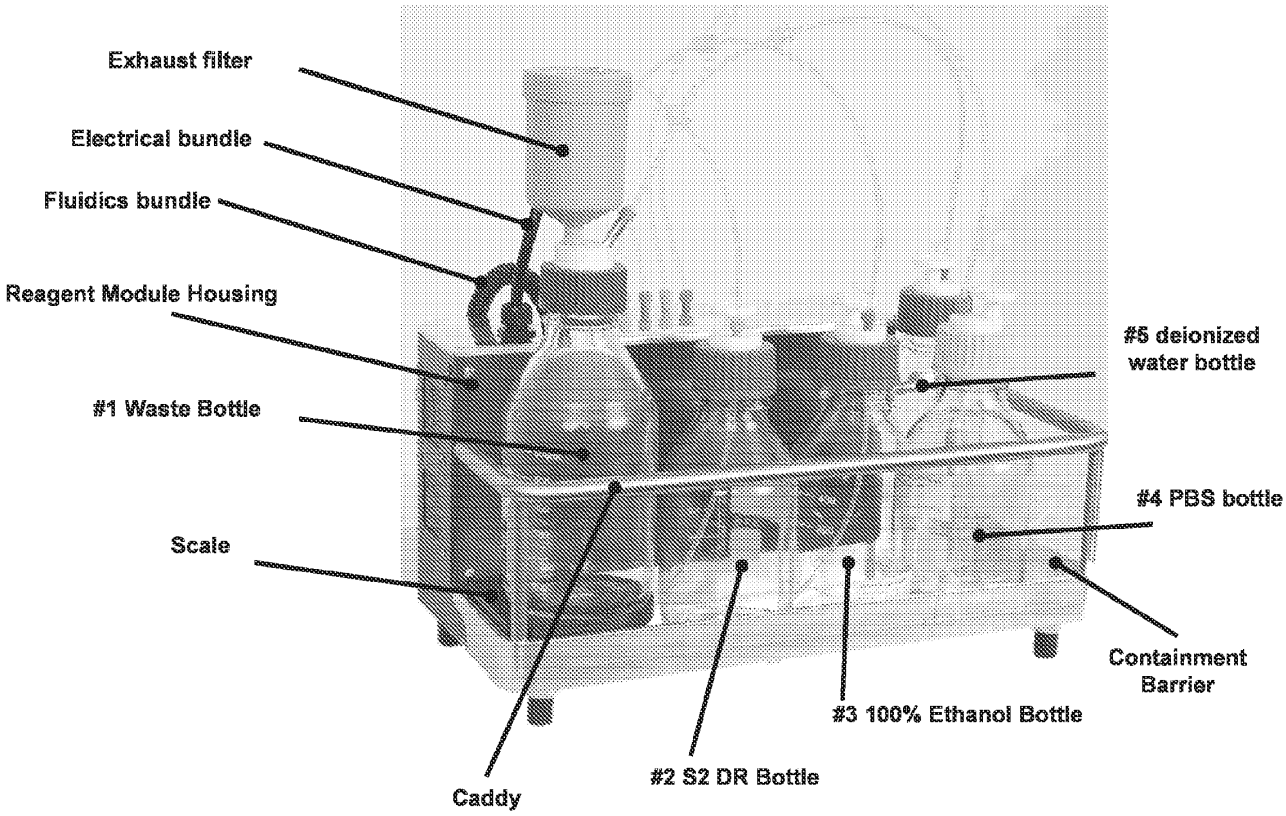
Exhaust filter
Electrical bundle
Fluidics bundle
Reagent Module Housing
#1 Waste Bottle
Scale
Caddy
#2 S2 DR Bottle
#3 100% Ethanol Bottle
#4 PBS bottle
#5 deionized water bottle
Containment Barrier

Figure 28.

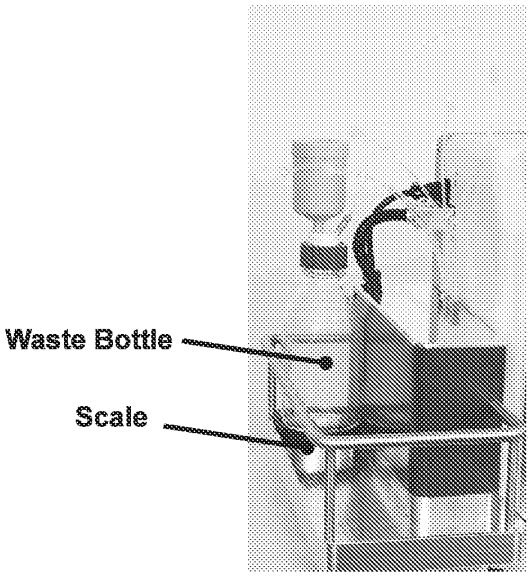

Figure 29.

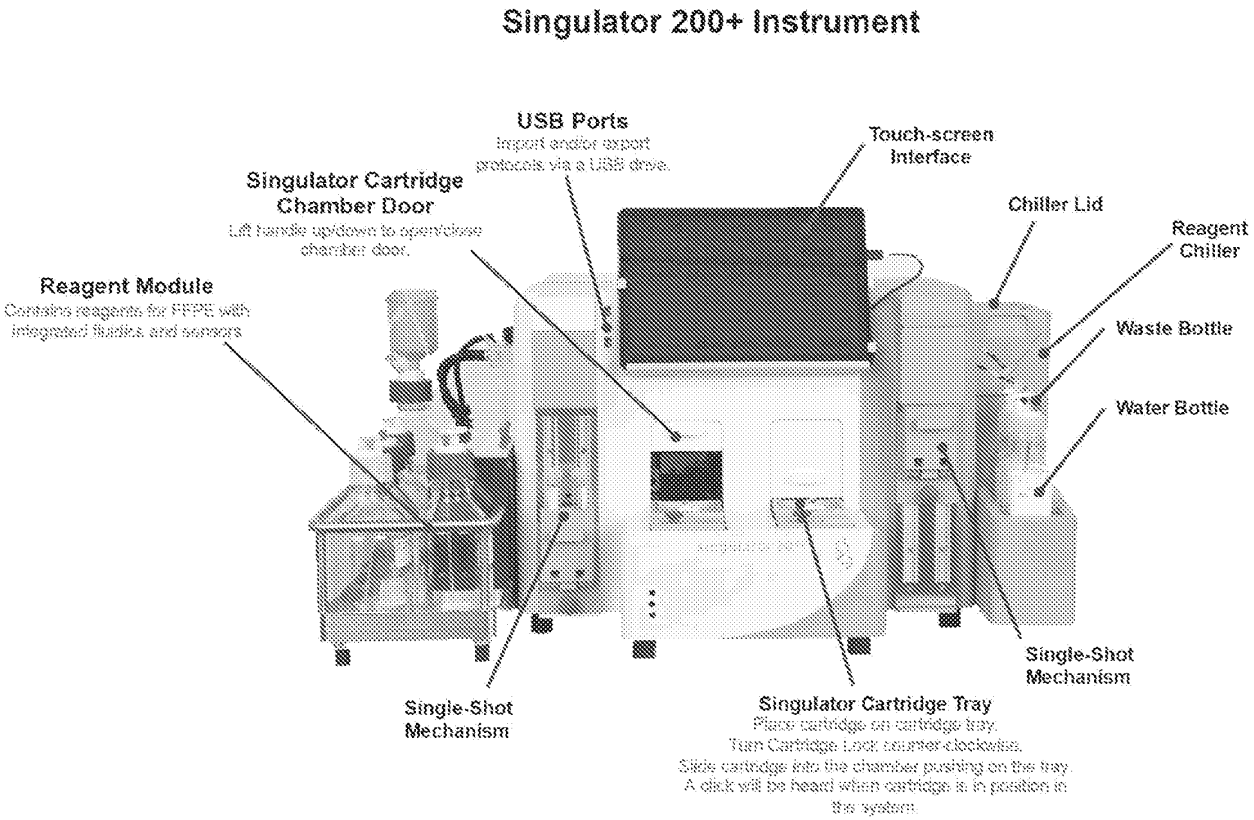
Singulator 200+ Instrument
USB Ports
Import and/or export protocols via a USB drive.
Touch-screen Interface
Singulator Cartridge Chamber Door
Lift handle up/down to open/close chamber door.
Chiller Lid
Reagent Chiller
Reagent Module
Containing reagents for FFPE with integrated fluidics and sensors
Waste Bottle
Water Bottle
Single-Shot Mechanism
Single-Shot Mechanism
Singulator Cartridge Tray
Place cartridge on cartridge tray.
Turn Cartridge Lock counter-clockwise.
Slide cartridge into the chamber pushing on the tray.
A click will be heard when cartridge is in position in the system.

Figure 30.

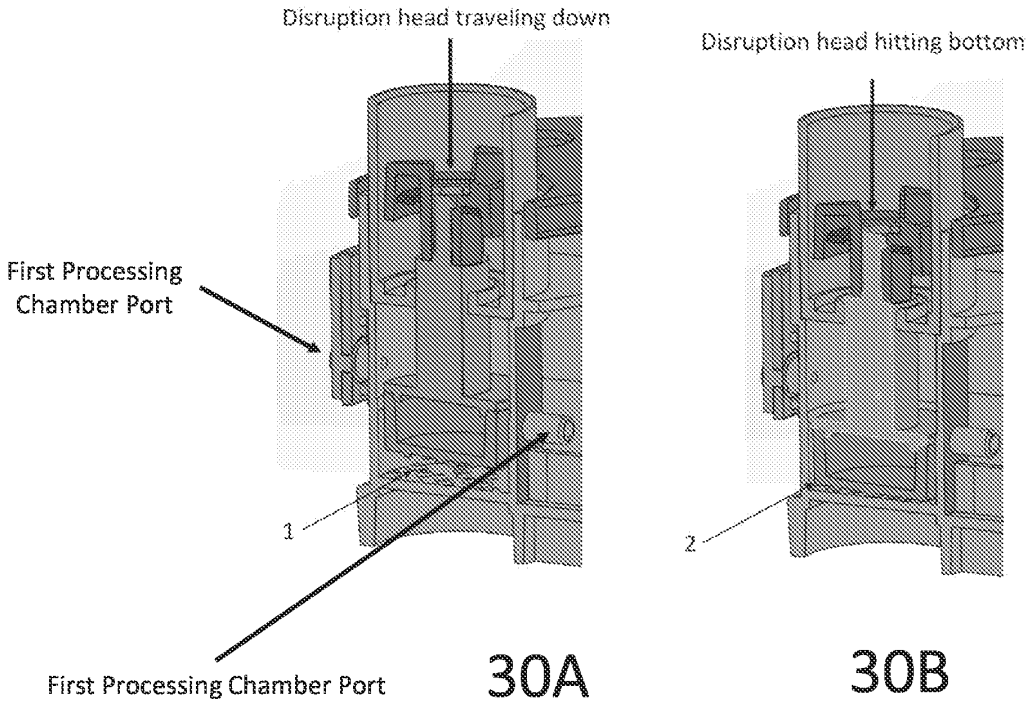
Disruption head traveling down
First Processing Chamber Port
1
First Processing Chamber Port
30A
Disruption head hitting bottom
2
30B

Figure 31.

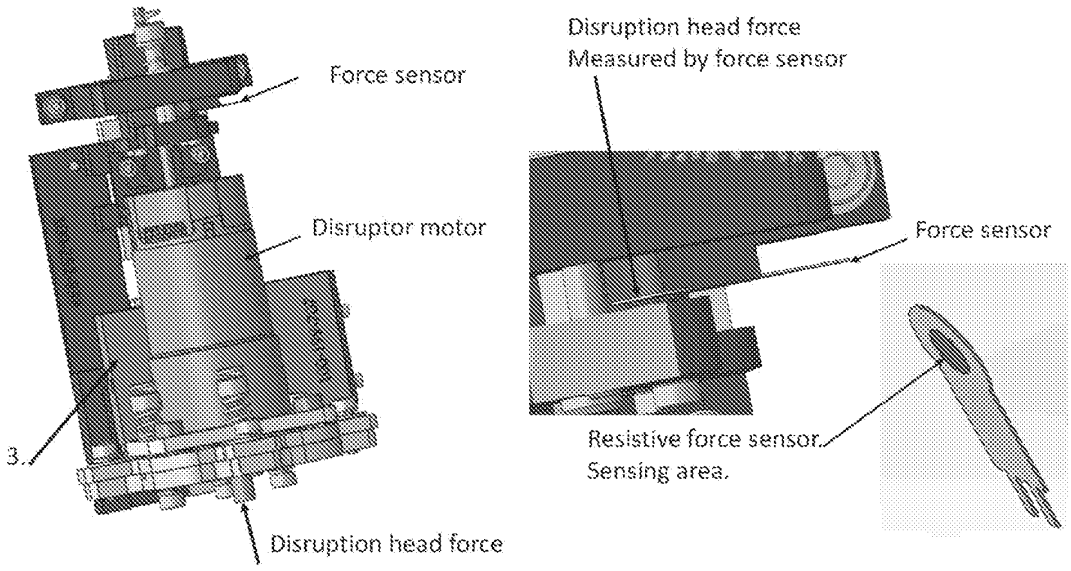
Force sensor
Disruptor motor
3.
Disruption head force
Disruption head force
Measured by force sensor
Force sensor
Resistive force sensor.
Sensing area.
31A
31B
31C

Figure 32.

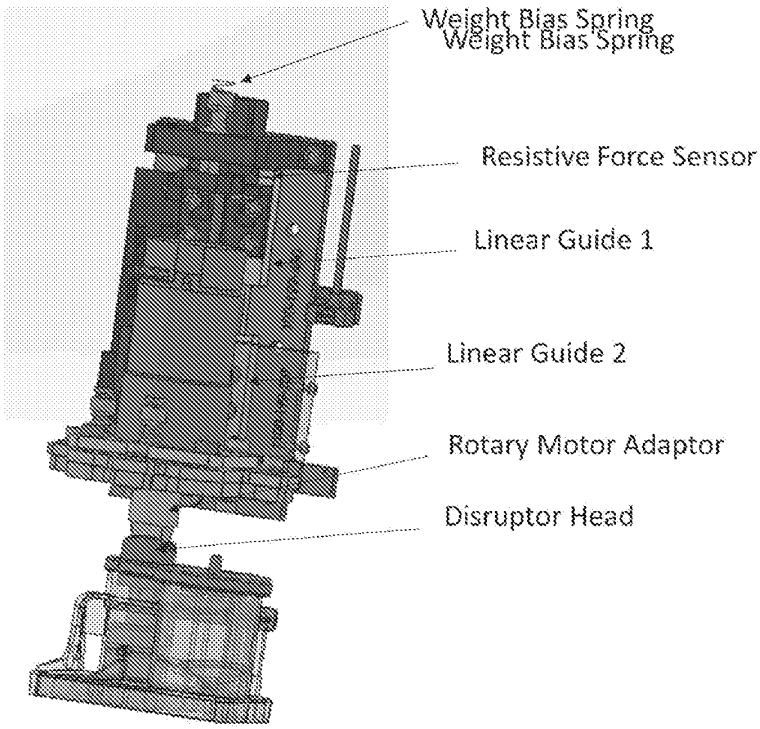
Weight Bias Spring
Weight Bias Spring
Resistive Force Sensor
Linear Guide 1
Linear Guide 2
Rotary Motor Adaptor
Disruptor Head

Figure 33.

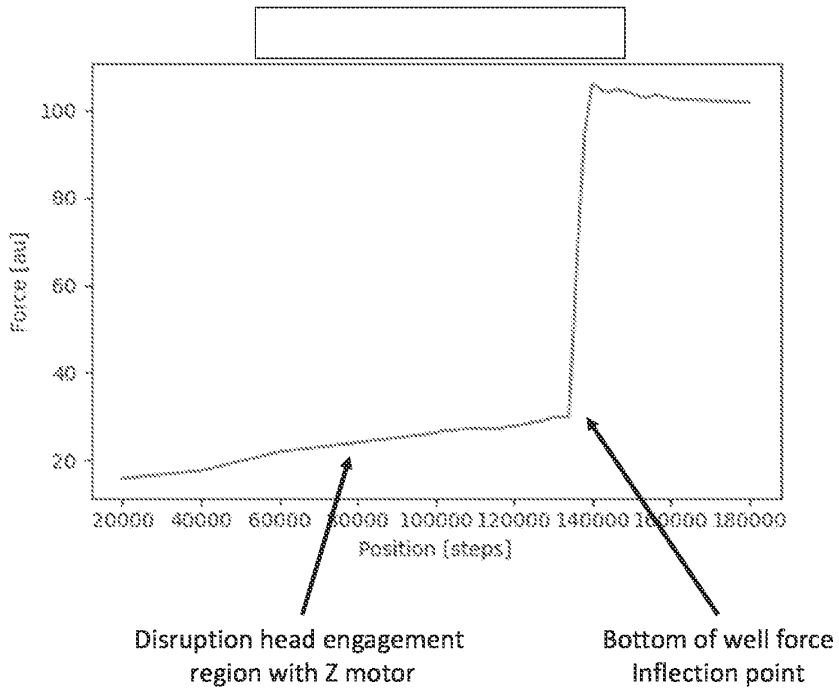
Force [au]
100
80
60
40
20
20000
40000
60000
80000
100000
120000
140000
160000
180000
Position [steps]
Disruption head engagement region with Z motor
Bottom of well force Inflection point

Figure 34.

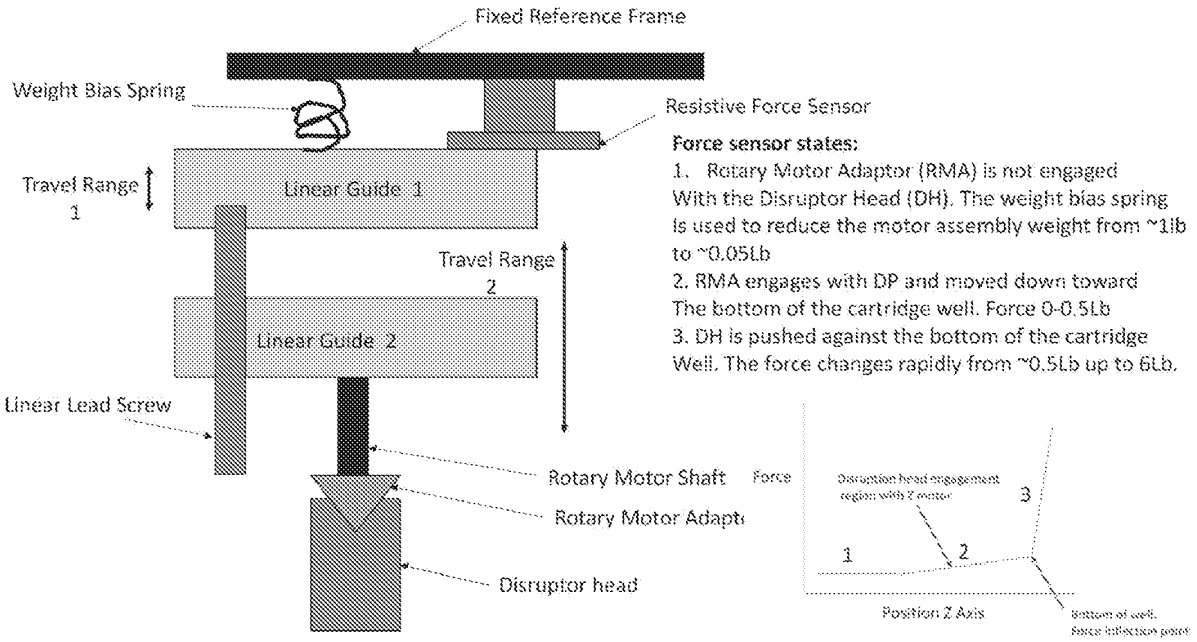
Fixed Reference Frame
Weight Bias Spring
Resistive Force Sensor
Force sensor states:
1. Rotary Motor Adaptor (RMA) is not engaged With the Disruptor Head (DH). The weight bias spring is used to reduce the motor assembly weight from ~1lb to ~0.05Lb
2. RMA engages with DP and moved down toward The bottom of the cartridge well. Force 0-0.5Lb
3. DH is pushed against the bottom of the cartridge Well. The force changes rapidly from ~0.5Lb up to 6Lb.
Travel Range 1
Linear Guide 1
Travel Range 2
Linear Guide 2
Linear Lead Screw
Rotary Motor Shaft
Rotary Motor Adapt
Disruptor head
Force
Disruption head engagement region with Z motor
1
2
3
Position Z Axis
Bottom of well. Force inflection point