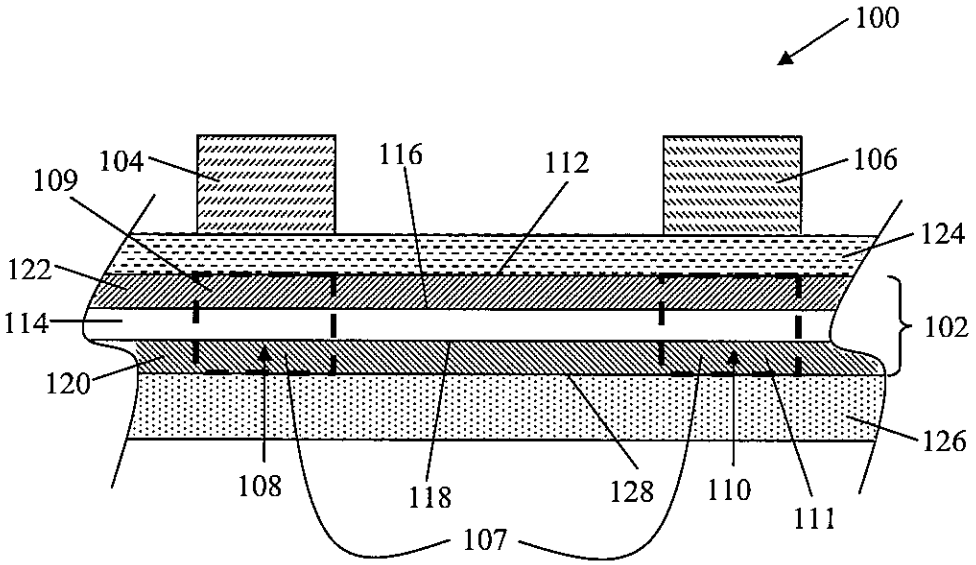


Figure 1(a)

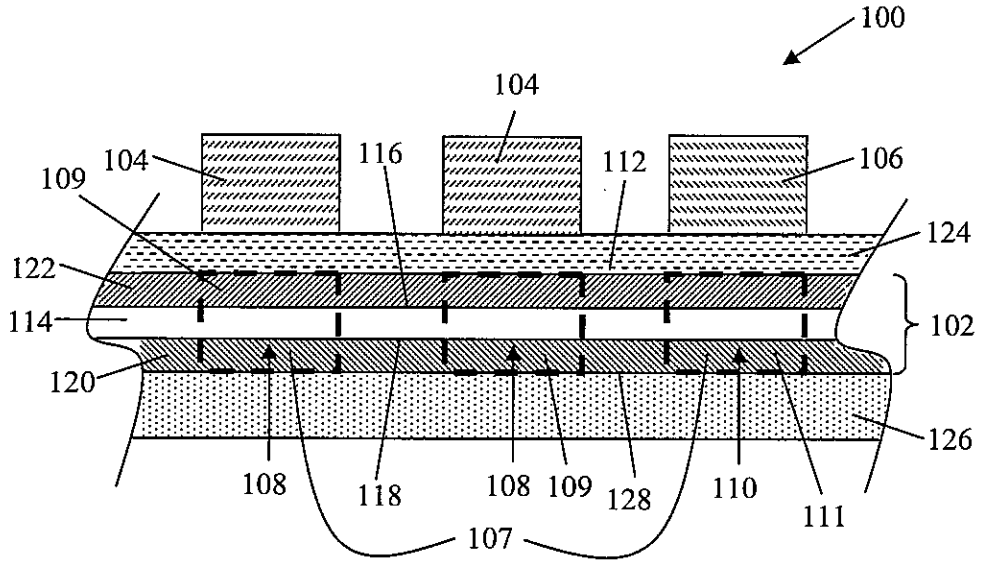


Figure 1(b)

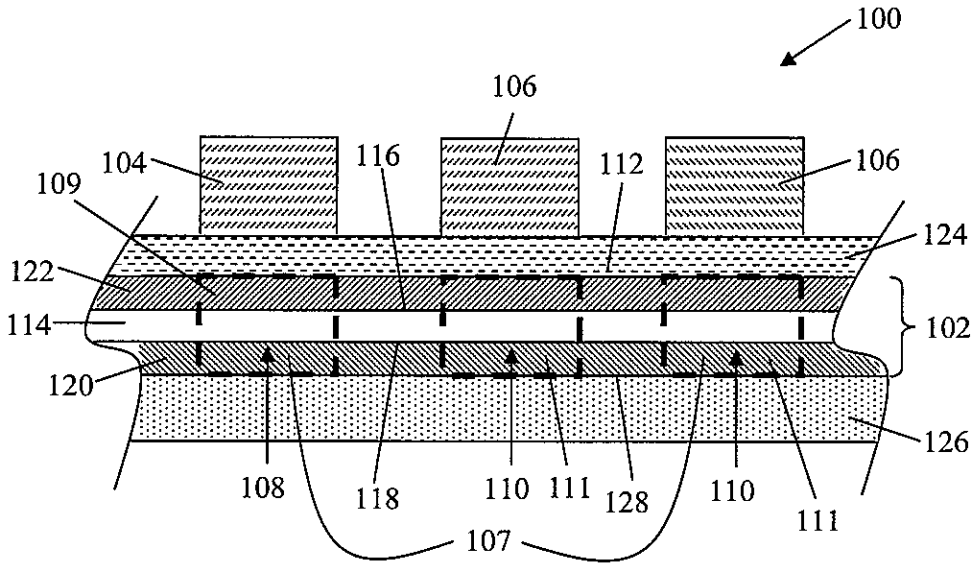


Figure 1(c)

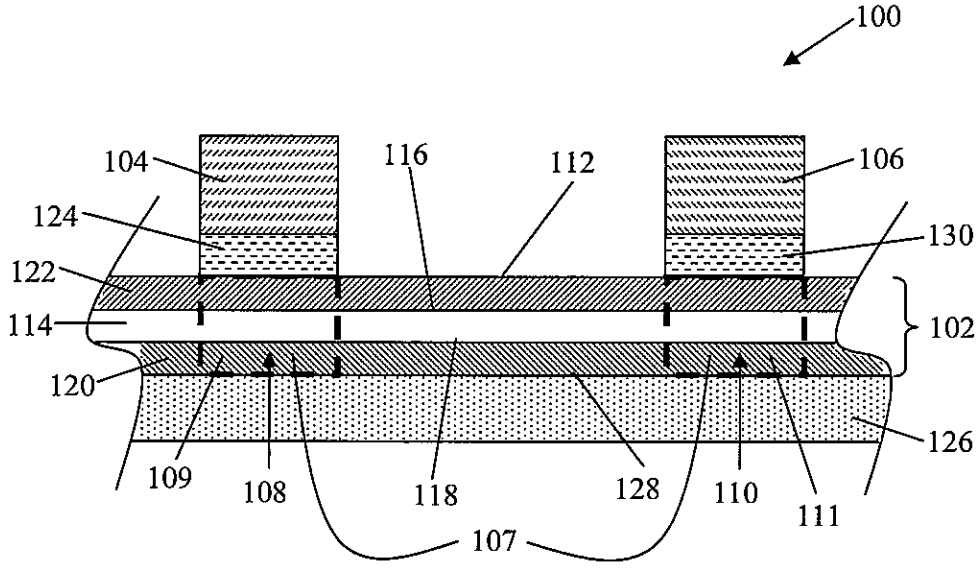


Figure 1(d)

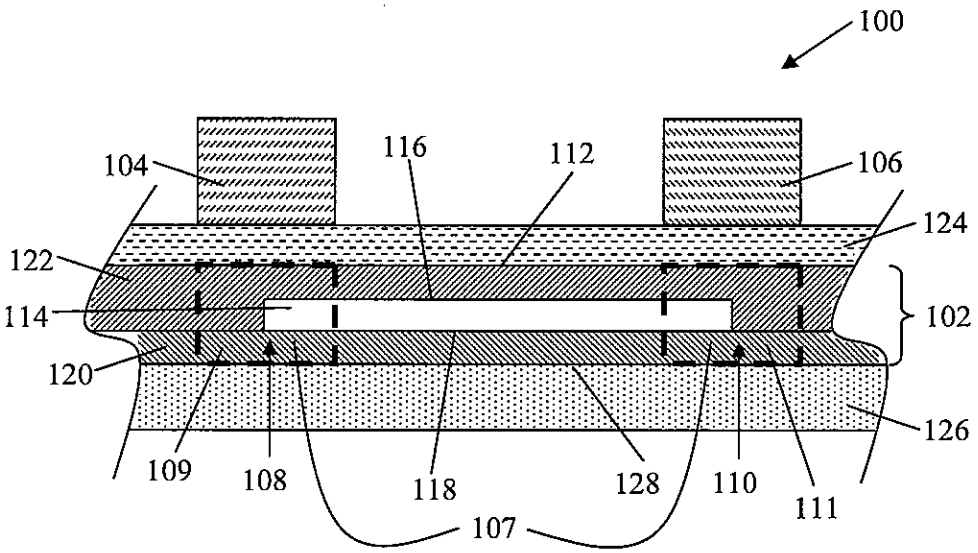


Figure 1(e)

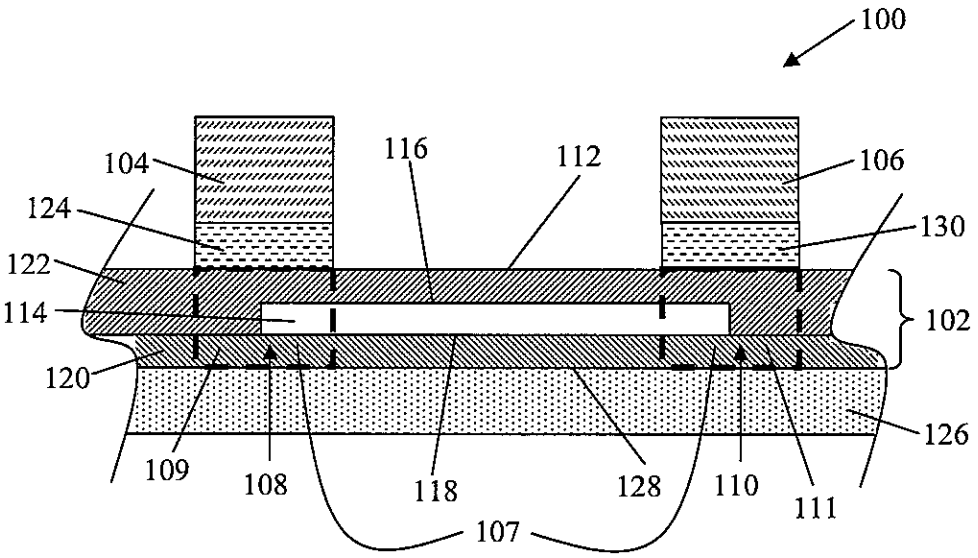


Figure 1(f)

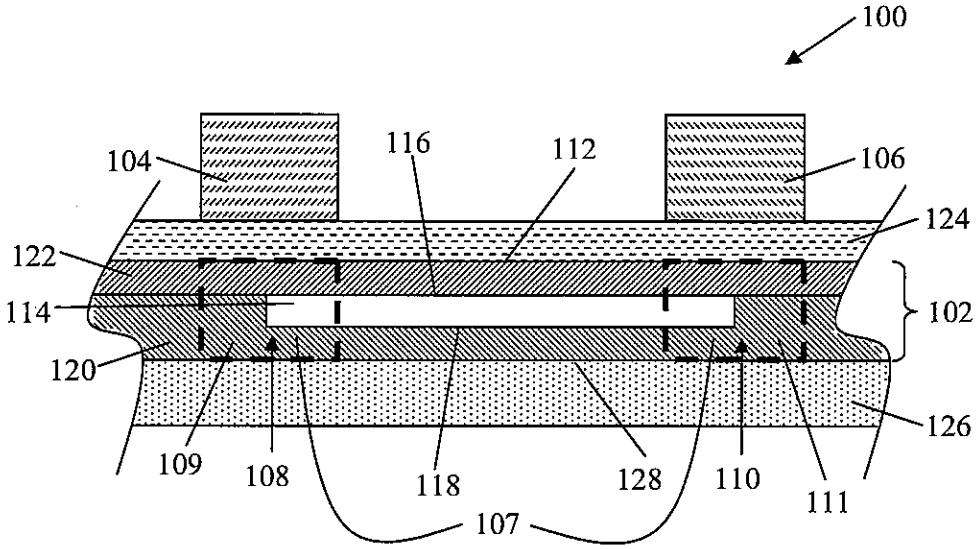


Figure 1(g)

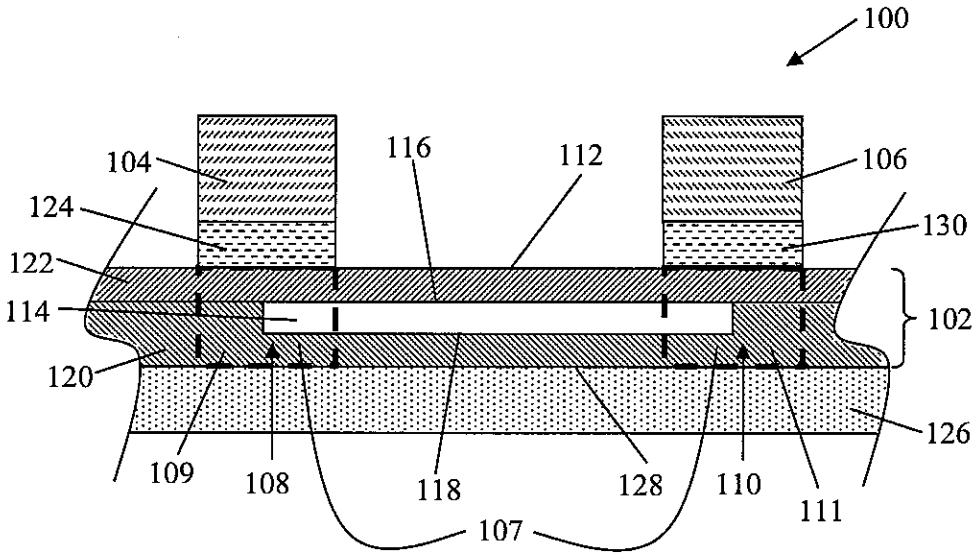


Figure 1(h)

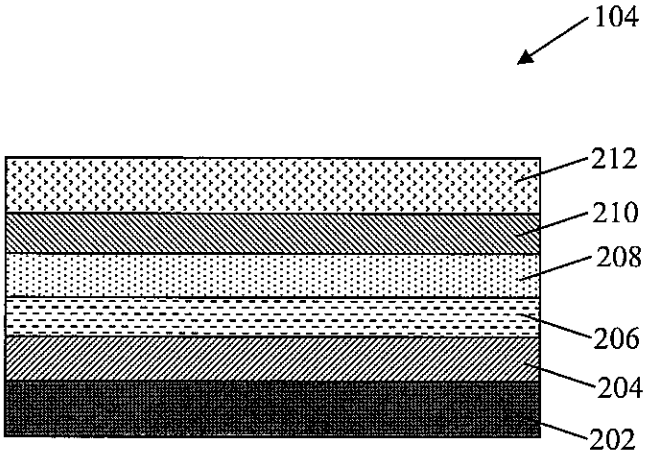


Figure 2

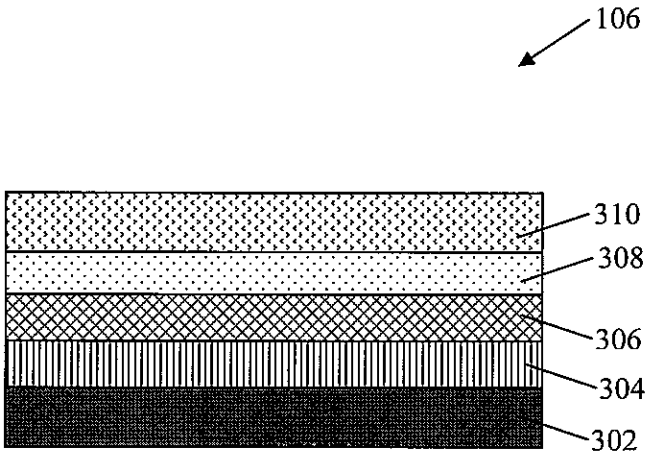


Figure 3

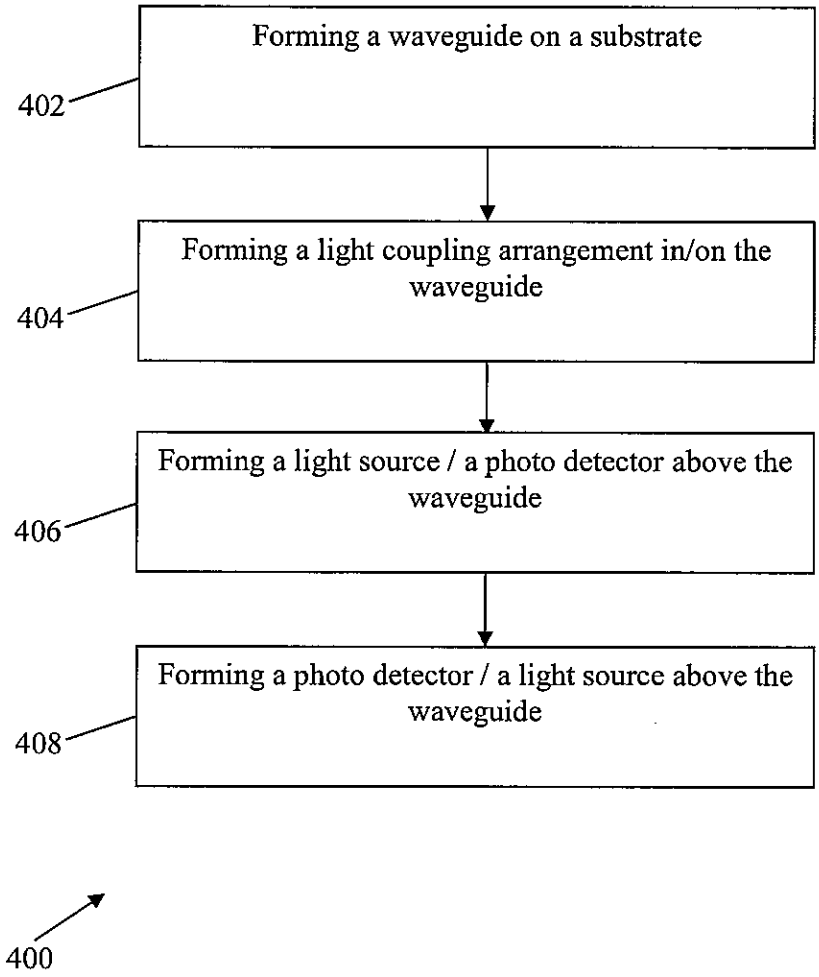
Forming a waveguide on a substrate
402
Forming a light coupling arrangement in/on the waveguide
404
Forming a light source / a photo detector above the waveguide
406
Forming a photo detector / a light source above the waveguide
408
400

Figure 4

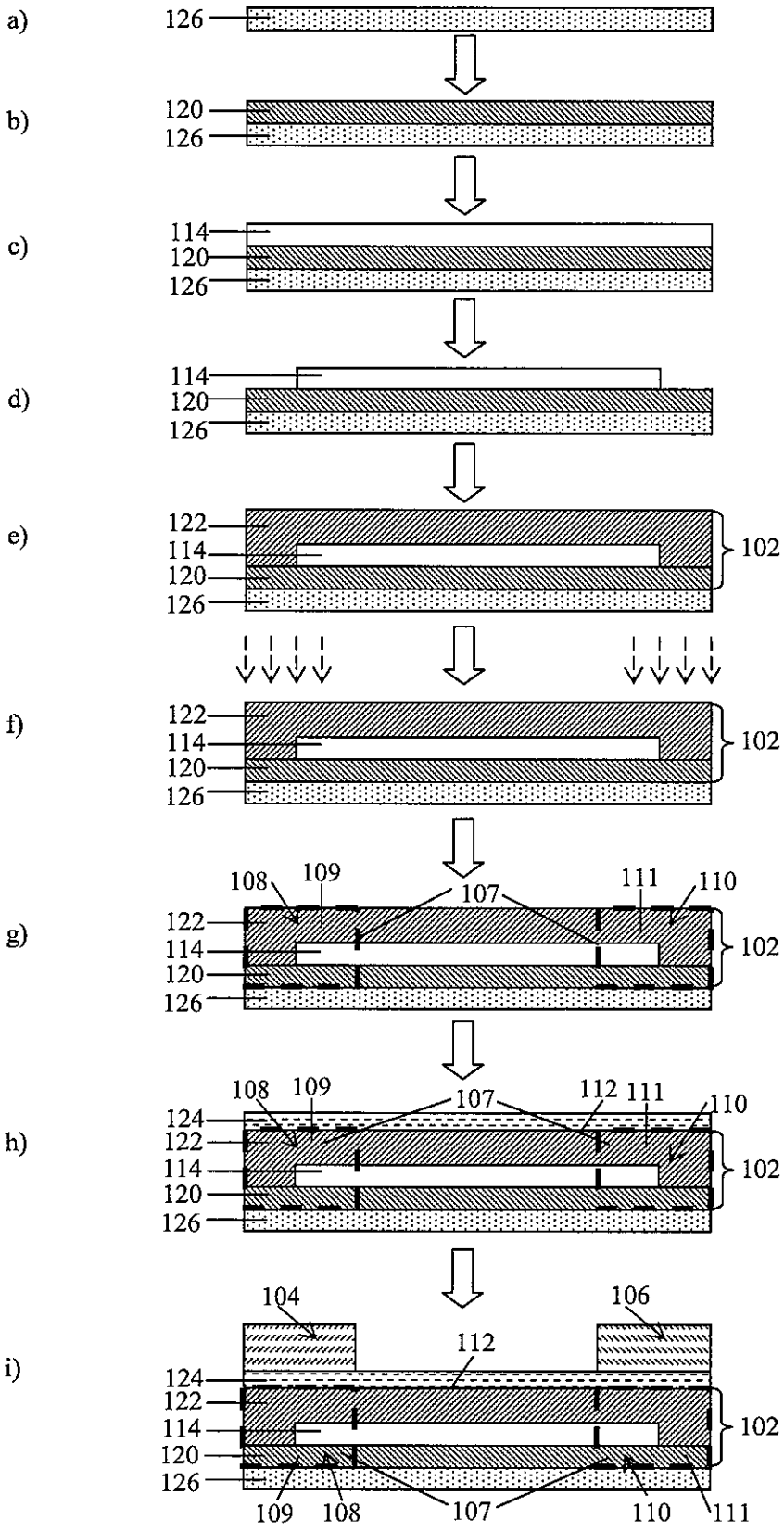
a)
126
b)
120
126
c)
114
120
126
d)
114
120
126
e)
122
114
120
126
102
f)
122
114
120
126
102
g)
108
109
107
111
110
122
114
120
126
102
h)
108
109
107
112
111
110
124
122
114
120
126
102
i)
104
106
112
124
122
114
120
126
102
109
108
107
110
111

Figure 5

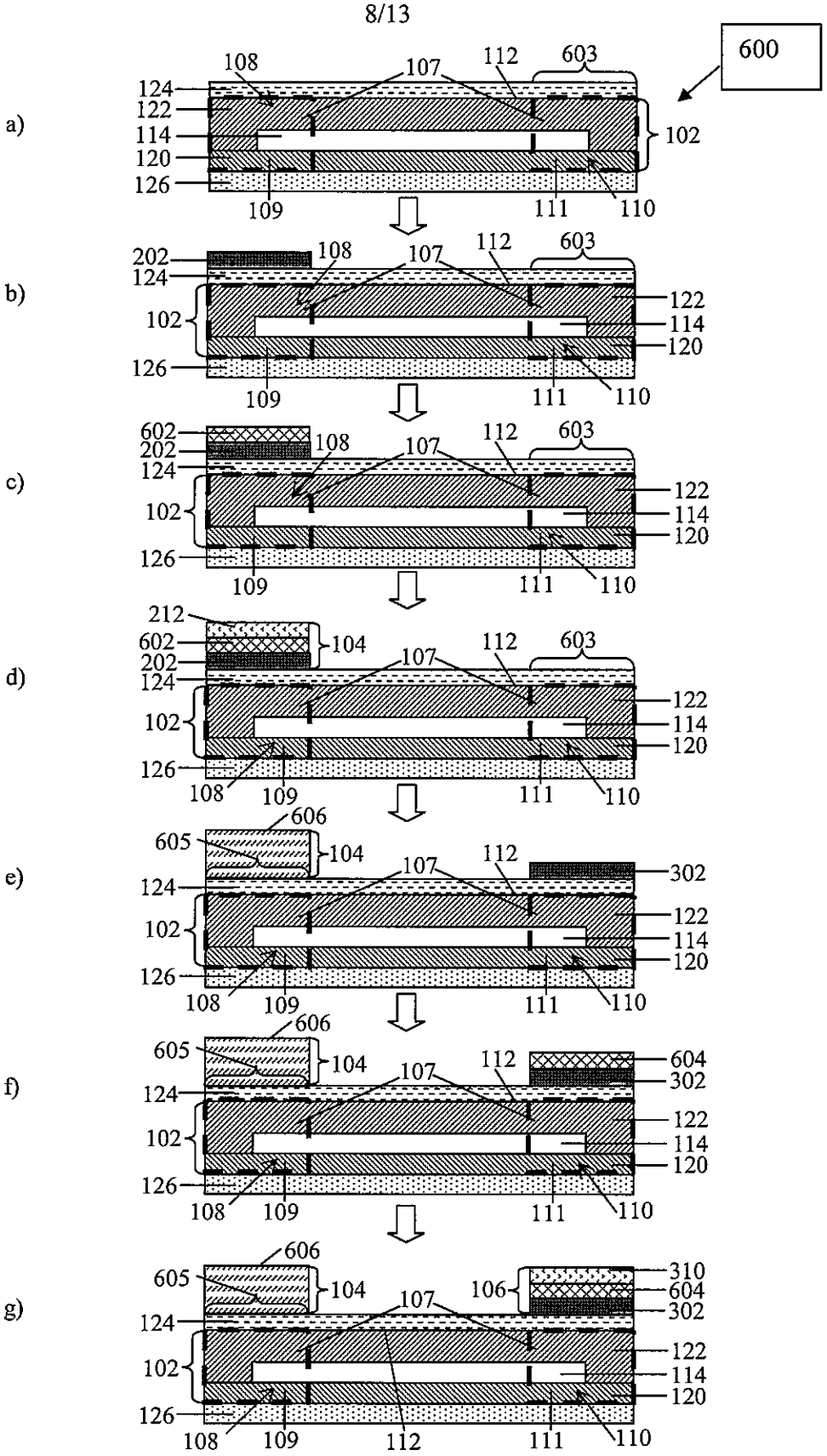
a)
600
108
107
112
603
124
122
114
120
126
102
109
111
110
b)
202
602
212
104
606
605
106
604
310
302
c)
d)
e)
f)
g)

Figure 6

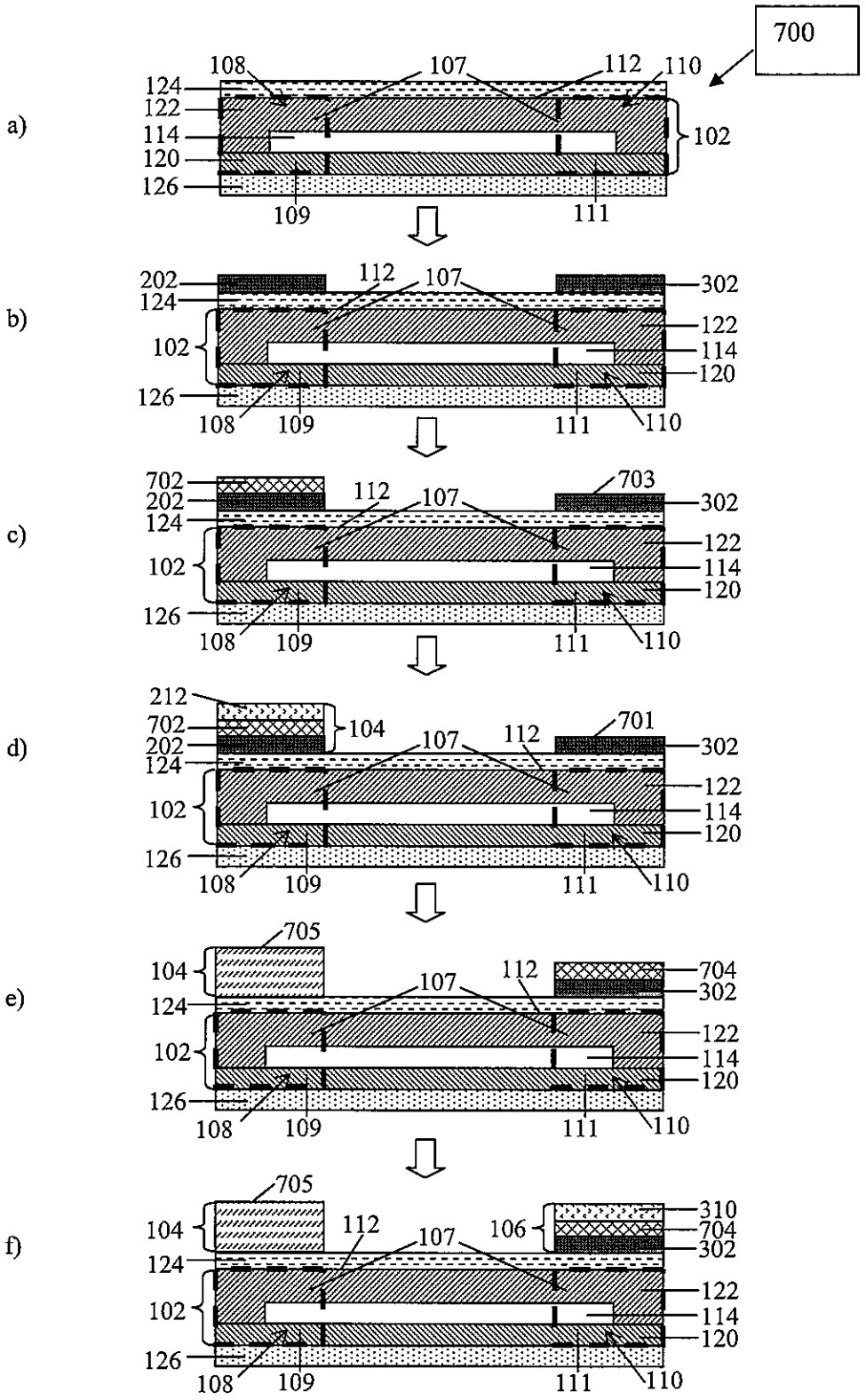
700
a)
108
107
112
110
124
122
114
120
126
102
109
111
b)
202
124
112
107
302
122
114
120
102
126
108
109
111
110
c)
702
202
124
112
107
703
302
122
114
120
102
126
108
109
111
110
d)
212
702
202
124
104
107
112
701
302
122
114
120
102
126
108
109
111
110
e)
705
104
124
107
112
704
302
122
114
120
102
126
108
109
111
110
f)
705
104
124
112
107
106
310
704
302
122
114
120
102
126
108
109
111
110

Figure 7

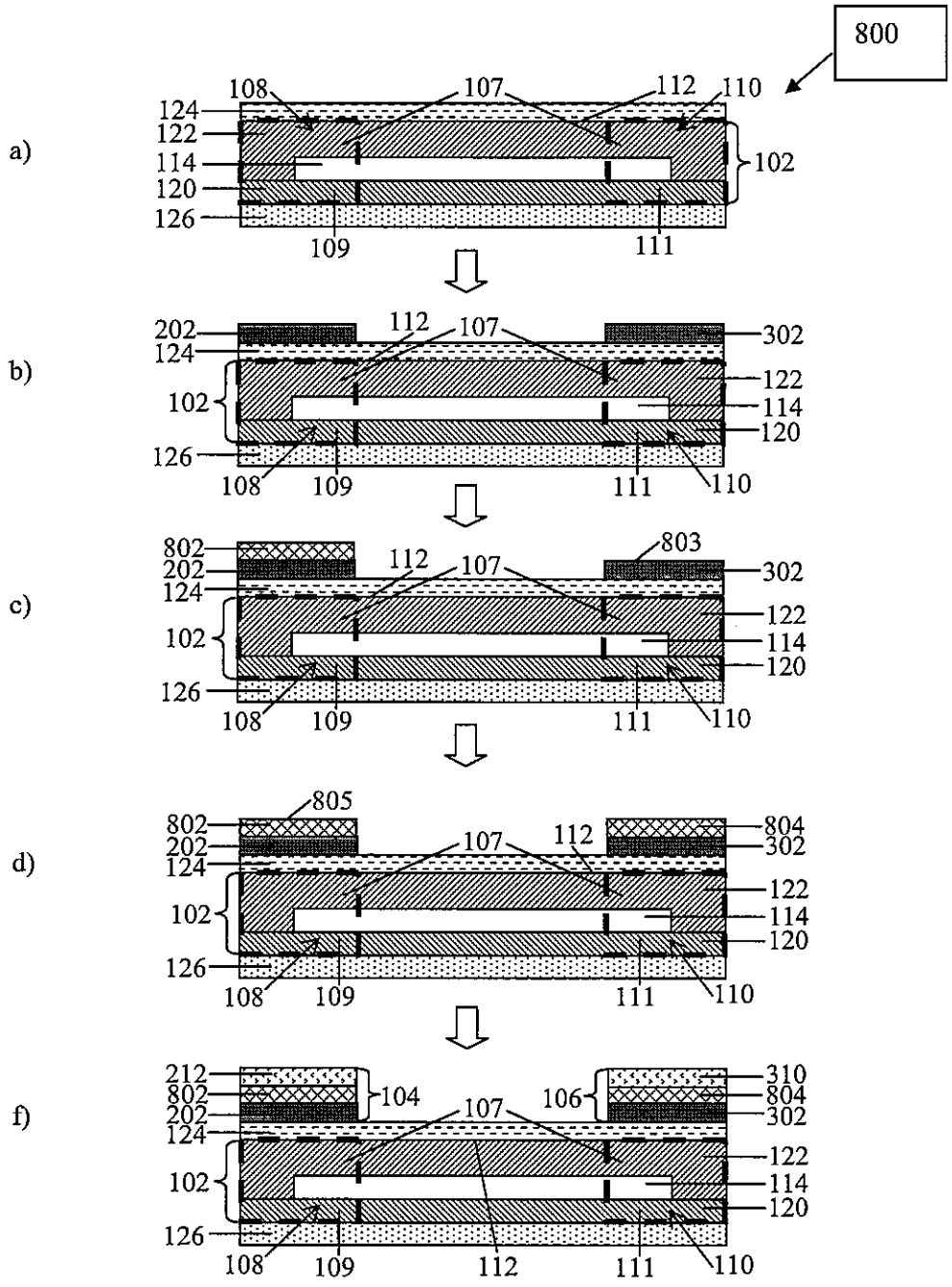
800
a)
108
107
112
110
124
122
114
120
126
102
109
111
b)
202
112
107
302
124
122
102
114
120
126
108
109
111
110
c)
802
803
202
112
107
302
124
122
102
114
120
126
108
109
111
110
d)
805
802
804
202
107
112
302
124
122
102
114
120
126
108
109
111
110
f)
212
104
106
310
802
804
202
107
302
124
122
102
114
120
126
108
109
112
111
110

Figure 8

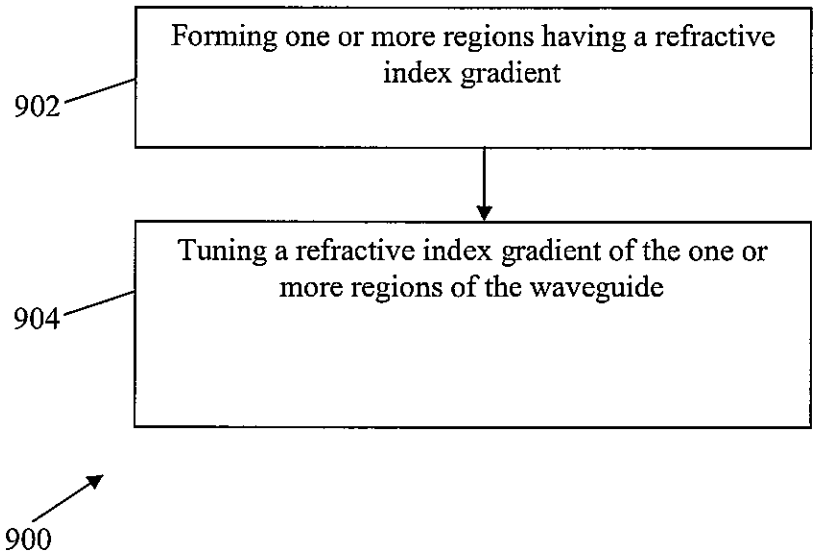
Forming one or more regions having a refractive index gradient
902
Tuning a refractive index gradient of the one or more regions of the waveguide
904
900

Figure 9

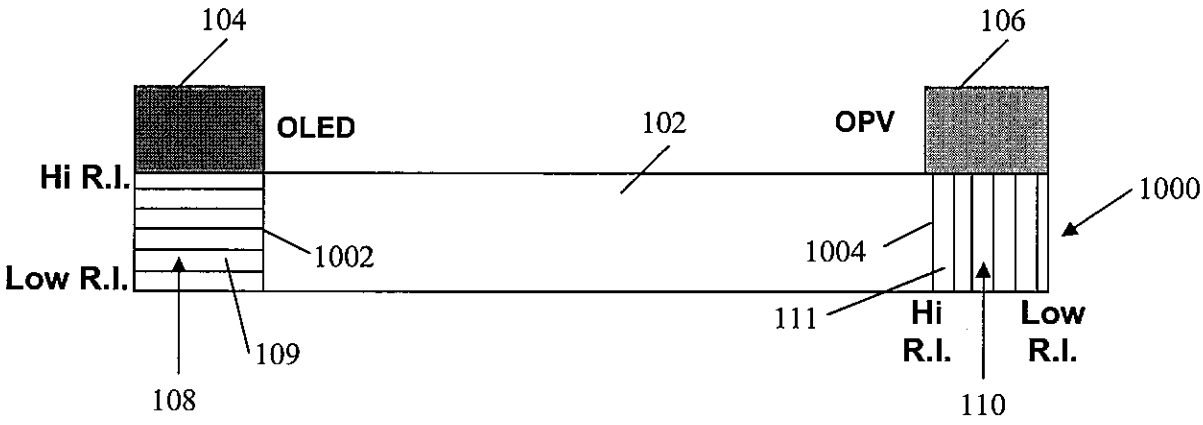
104
106
OLED
102
OPV
Hi R.I.
1000
1002
1004
Low R.I.
111
Hi
R.I.
Low
R.I.
109
108
110

Figure 10

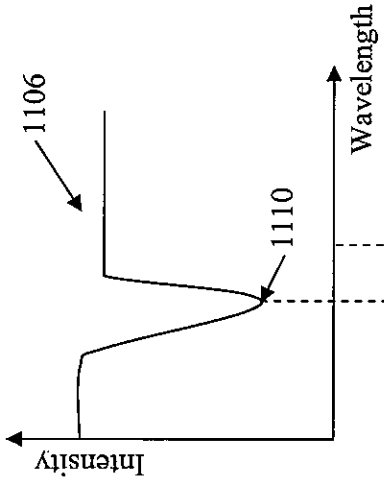


Figure 11(b)

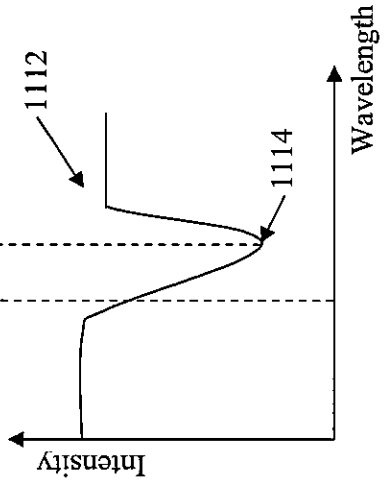


Figure 11(d)

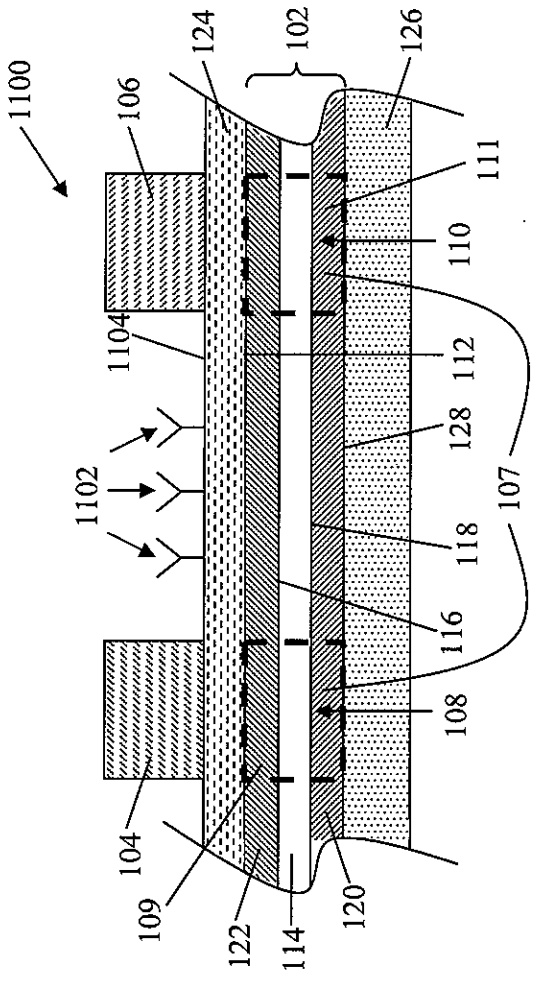


Figure 11(a)

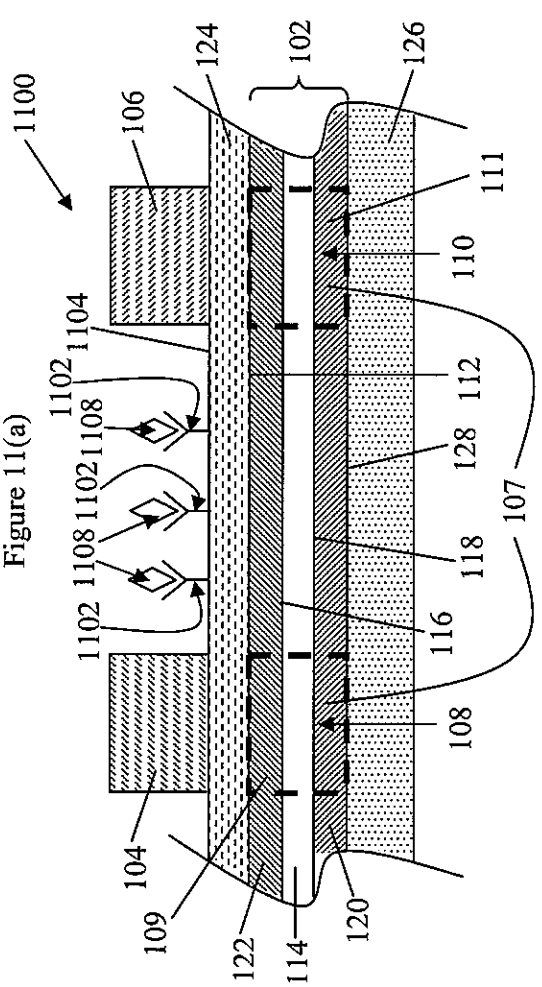


Figure 11(c)